REVISIONS			
REV	DESCRIPTION	DATE	APPROVED

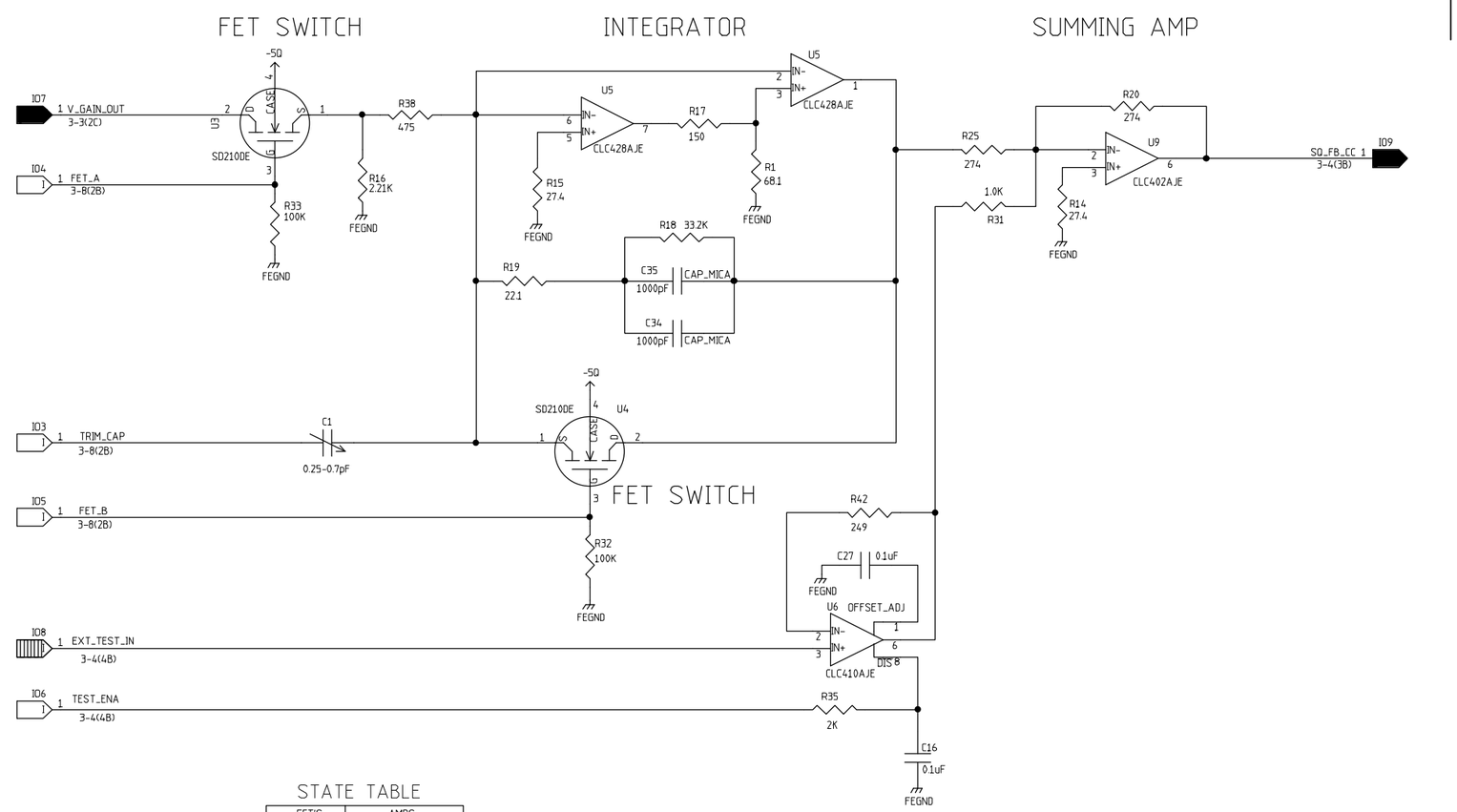

STATE TABLE

	FET'S		AMPS		
FB_O/C	U3	U4	U6	U7	U8
LOW	O	C	E	D	E
HI	C	O	D	E	D

O = OPEN C = CLOSED
E = ENABLE D = DISABLE

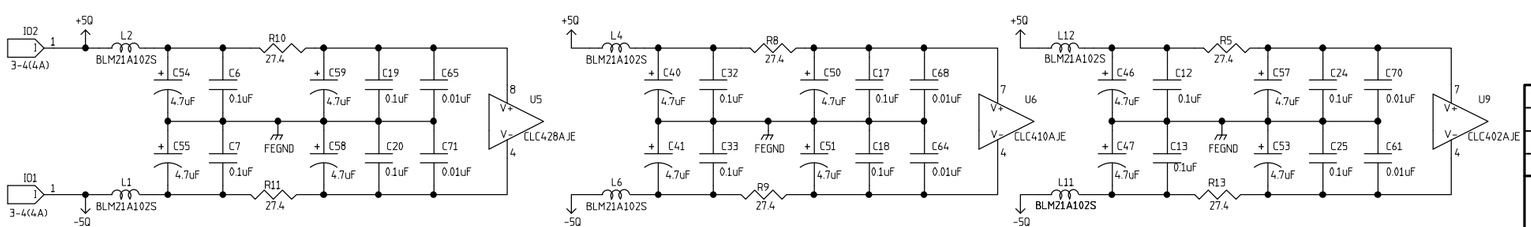

	NAME	DATE
ORIGINATOR	MERLE HALDEMAN	11/13/98
DRAWN	BRUCE MERKEL	11/13/98
CHECKED	TOM CRENNA	1/6/99
APPROVED		

FERMILAB PPD/ETT/ES CDMS (E-891)
ZIP MODULE
SQUID FEEDBACK INTEGRATOR

SIZE	FSCM NO.	DWG. NO.	REV
C			
SCALE		SHEET 3-5	

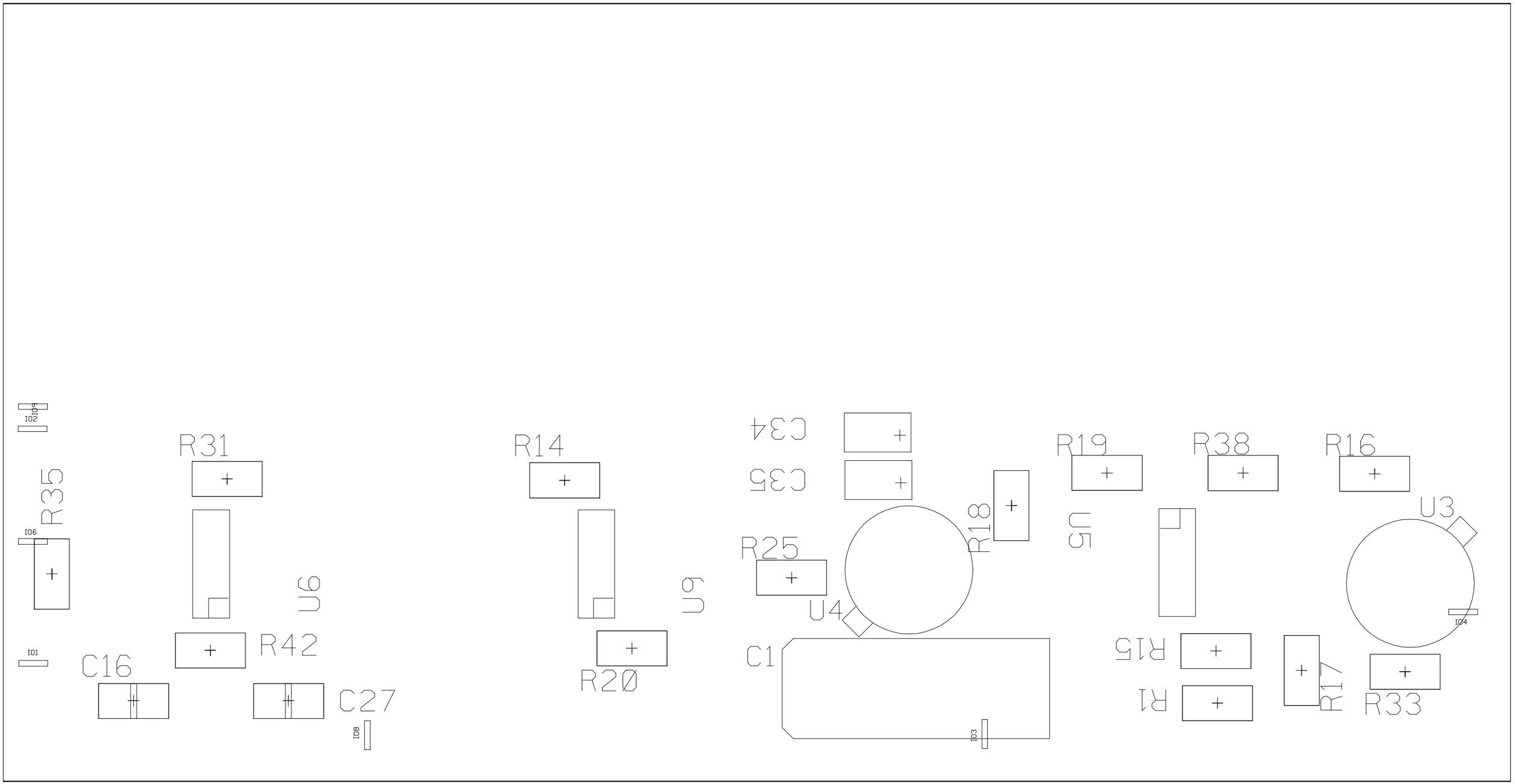
IO9
IO2
R35
IO6
IO1
R31
U6
R42
C16
C27
IO8
R14
U9
R20
C34
C35
R25
U4
C1
IO3
R18
R19
U5
R38
R16
U3
IO4
R15
R1
R17
R33

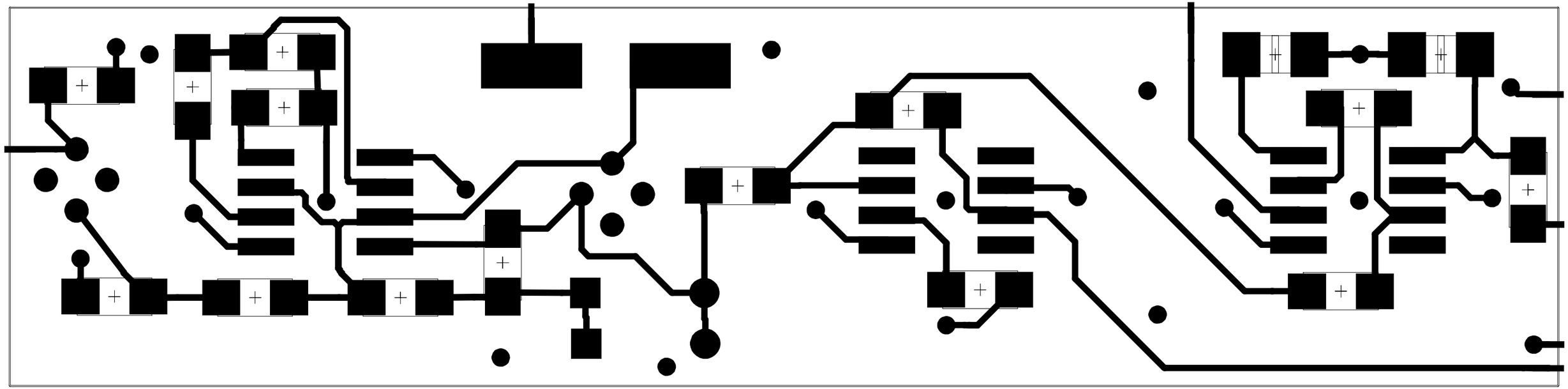

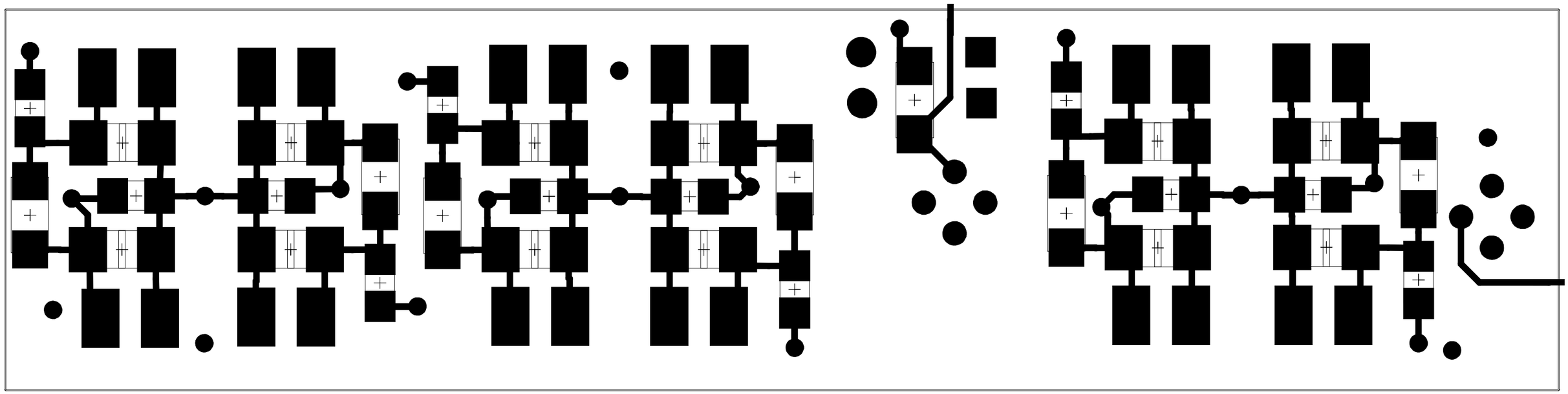

C40
C51
C46
C53
C55
C59
C50
C41
C57
C47
C58
C54
C33
C18
C15
C32
C13
C14
C1
C16
C20
C61
C64
C65
C21
C30
C2
R8
R9
R2
R12
R13
R35
R11
R10
L4
L9
L11
L1
L5
102
106