REVISIONS			
REV	DESCRIPTION	DATE	APPROVED

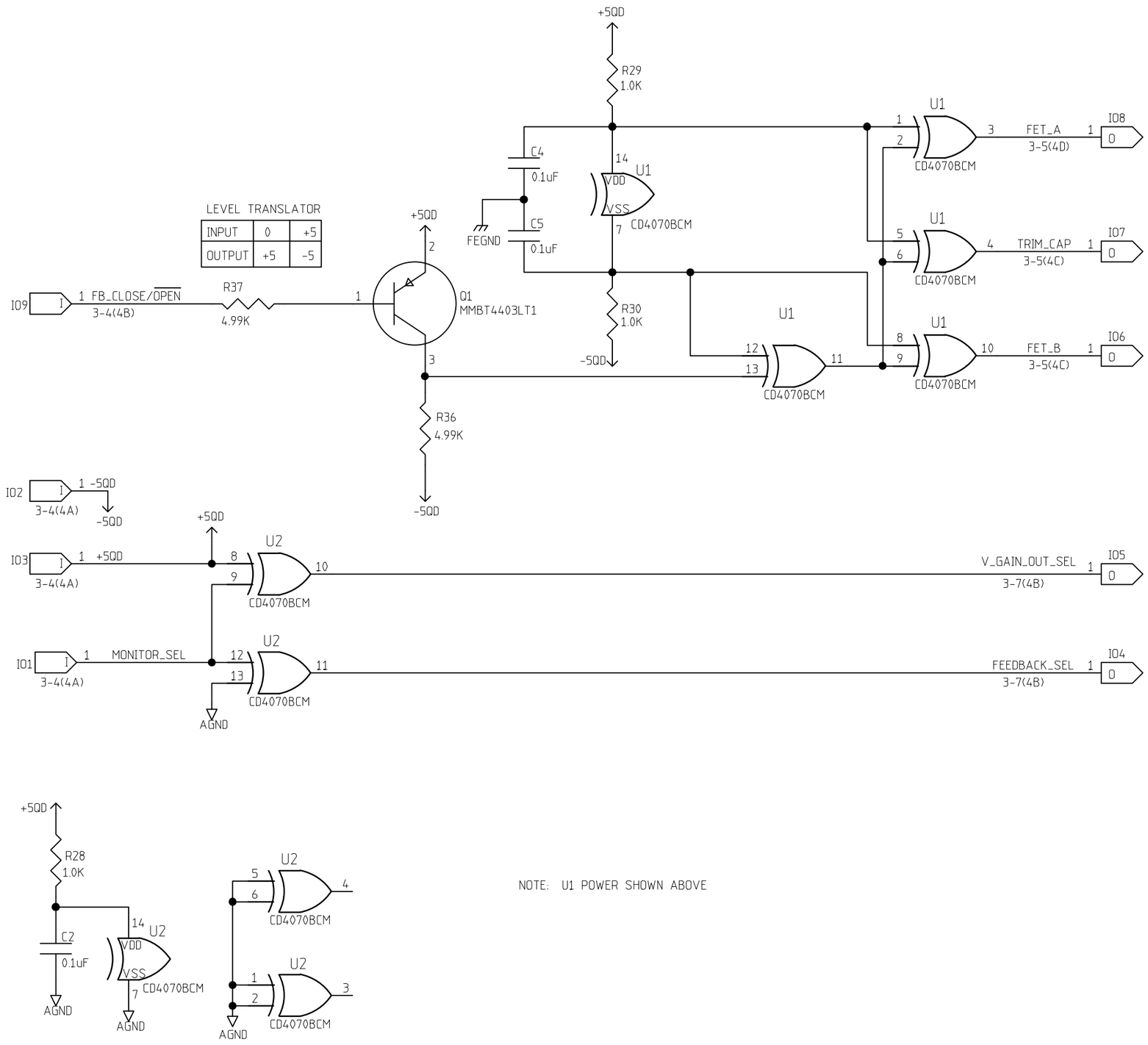

NOTE: U1 POWER SHOWN ABOVE

	NAME	DATE
ORIGINATOR	MERLE HALDEMAN	11/16/98
DRAWN	BRUCE MERKEL	11/16/98
CHECKED	TOM CRENNA	1/6/99
APPROVED		

FERMILAB PPD/ETT/ES CDMS (E-891)
ZIP MODULE
SQUID FEEDBACK LOGIC

SIZE	FSCM NO.	DWG. NO.	REV
B			
SCALE		SHEET 3-8	

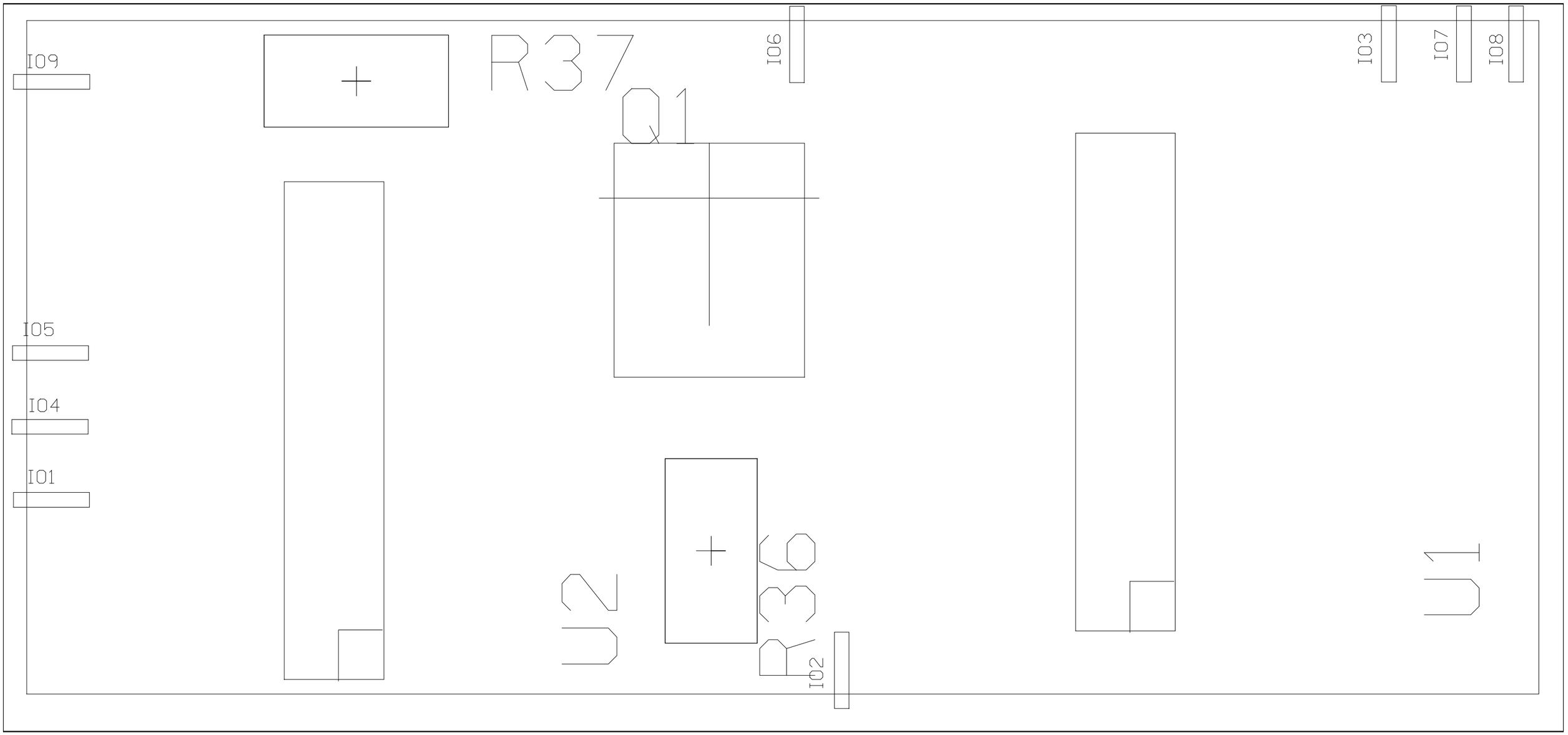

I09
R37
Q1
I06
I03
I07
I08
I05
I04
I01
U2
R36
I02
U1

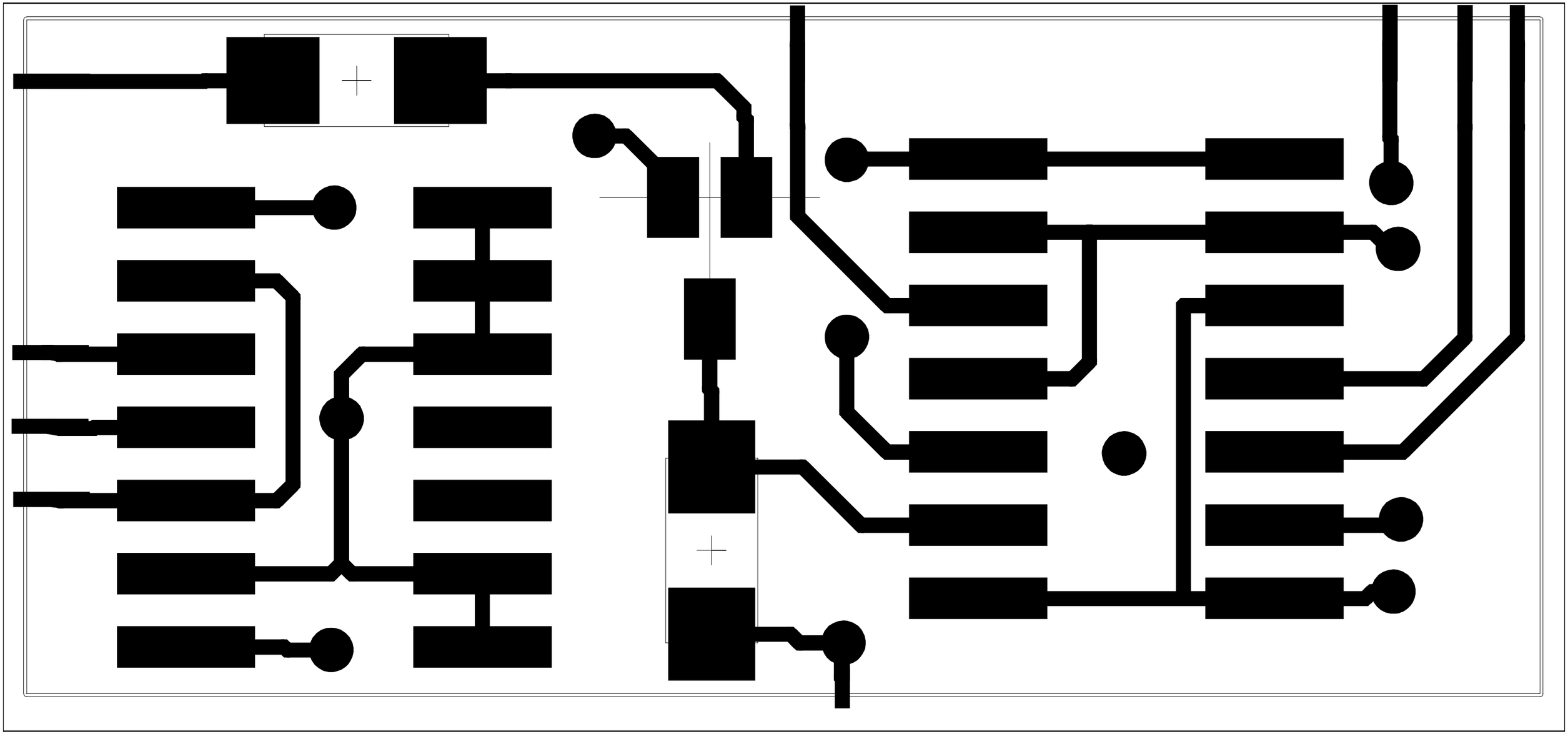

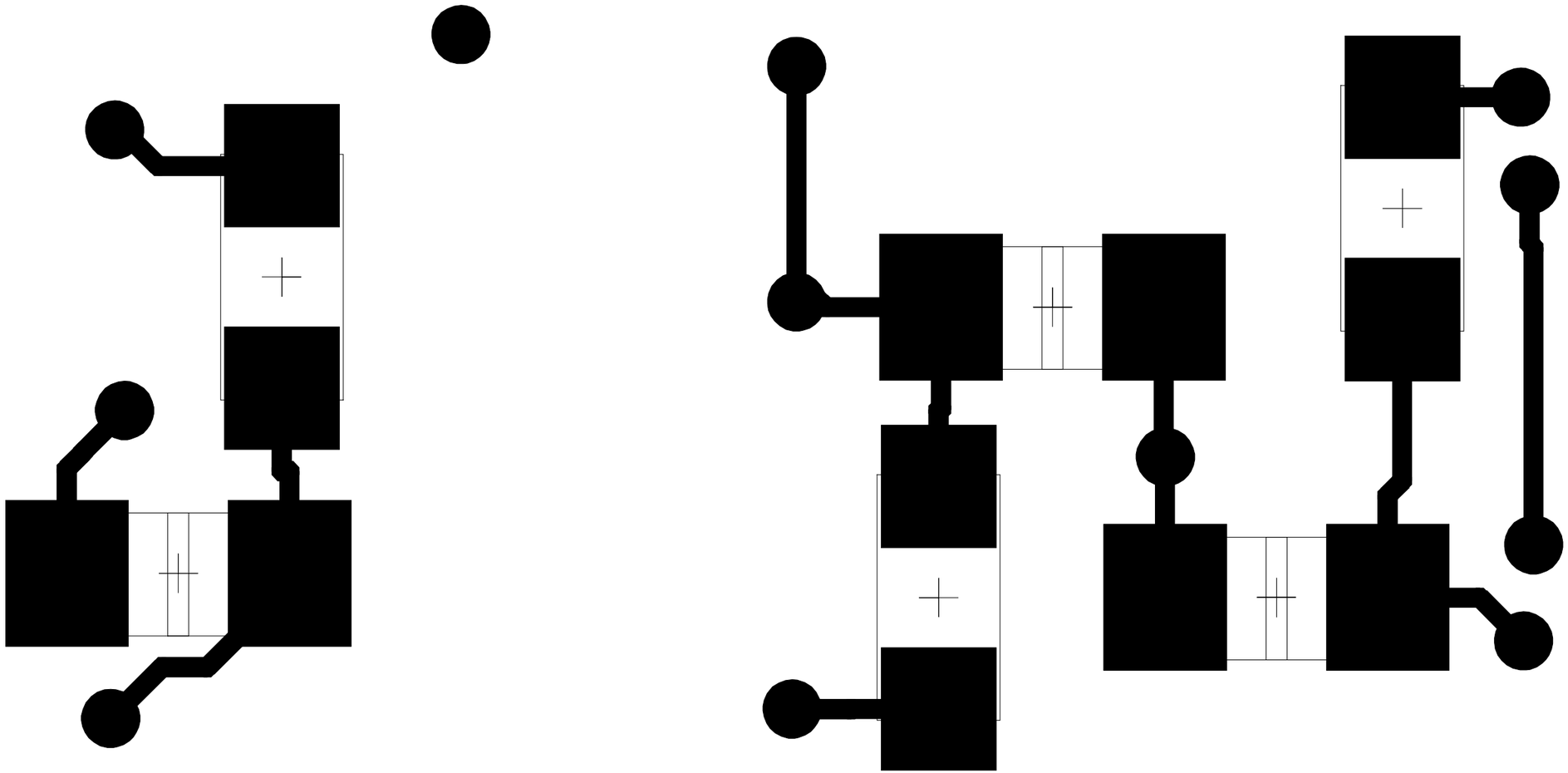

C1
C2
C3
C4
C5