REVISIONS			
REV	DESCRIPTION	DATE	APPROVED

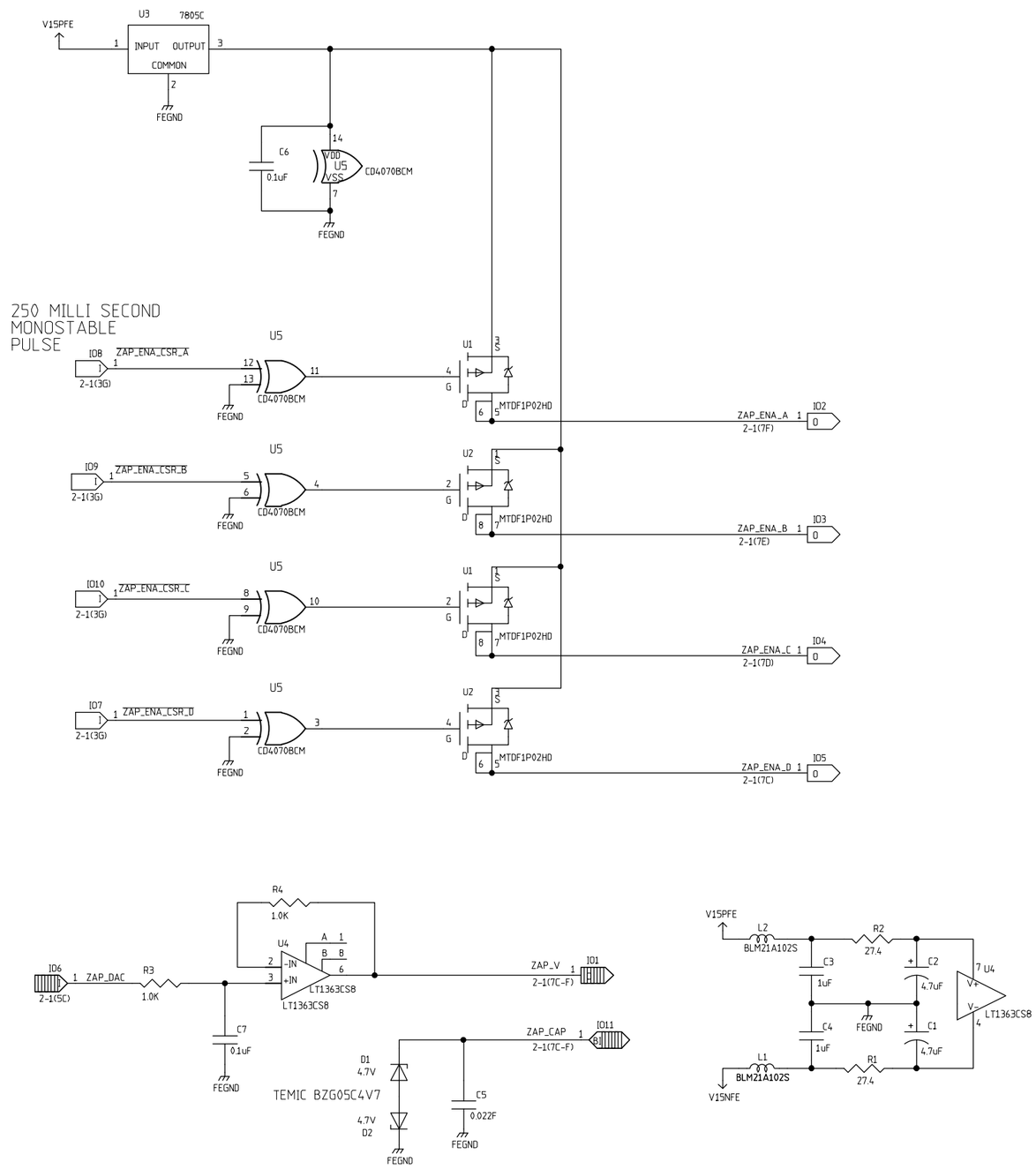

REVISED 1/11/99 BRUCE MERKEL

	NAME	DATE
ORIGINATOR	MERLE HALDEMAN	11/17/98
DRAWN	BRUCE MERKEL	11/17/98
CHECKED	TOM CRENNA	1/6/99
APPROVED		

FERMILAB PPD/ETT/ES CDMS (E-891)
ZIP MODULE
SQUID ZAP CONTROL

SIZE	FSCM NO.	DWG. NO.	REV
C			
SCALE		SHEET 4-1	

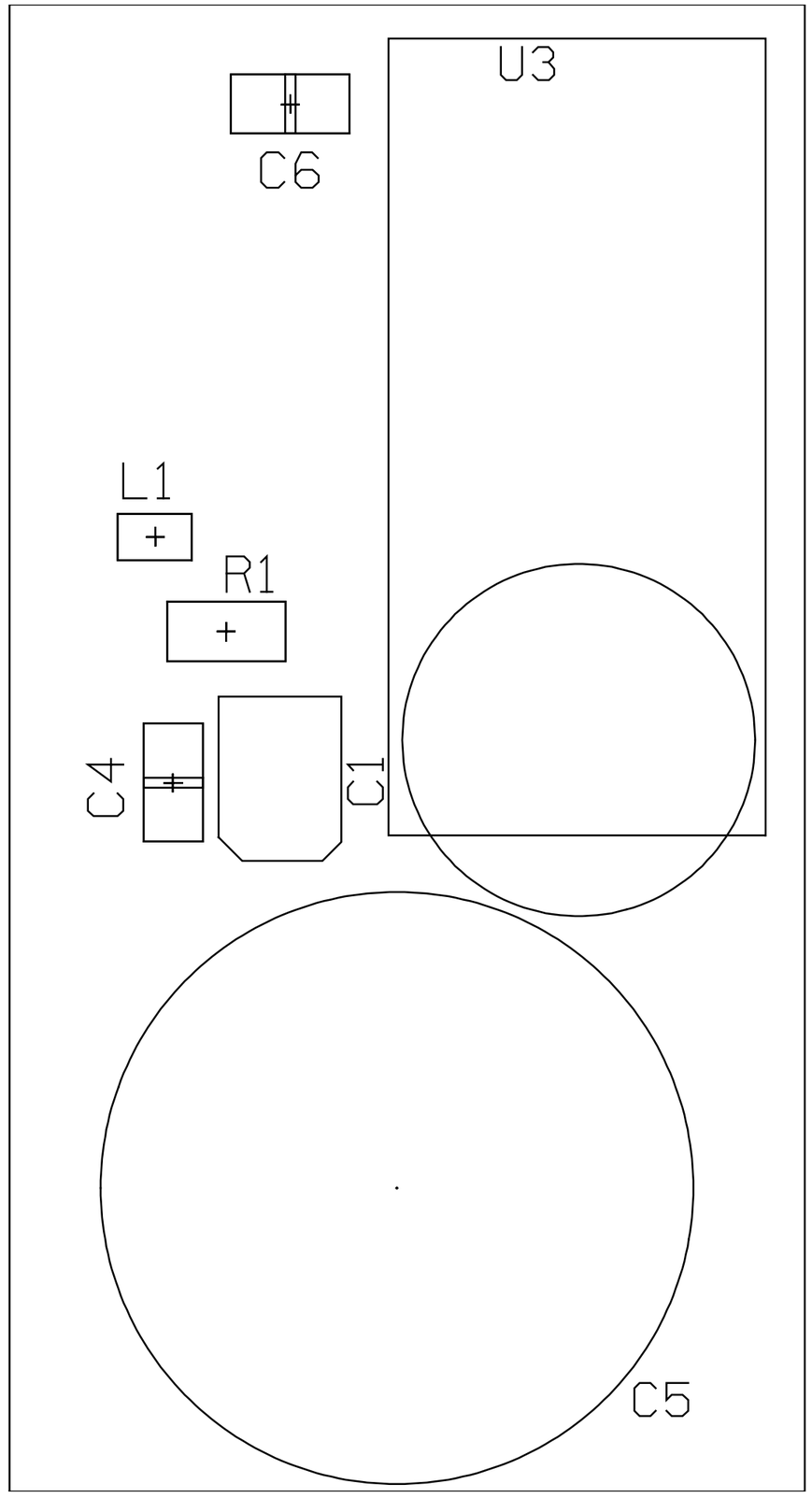
U3
C6
L1
R1
C4
C1
C5

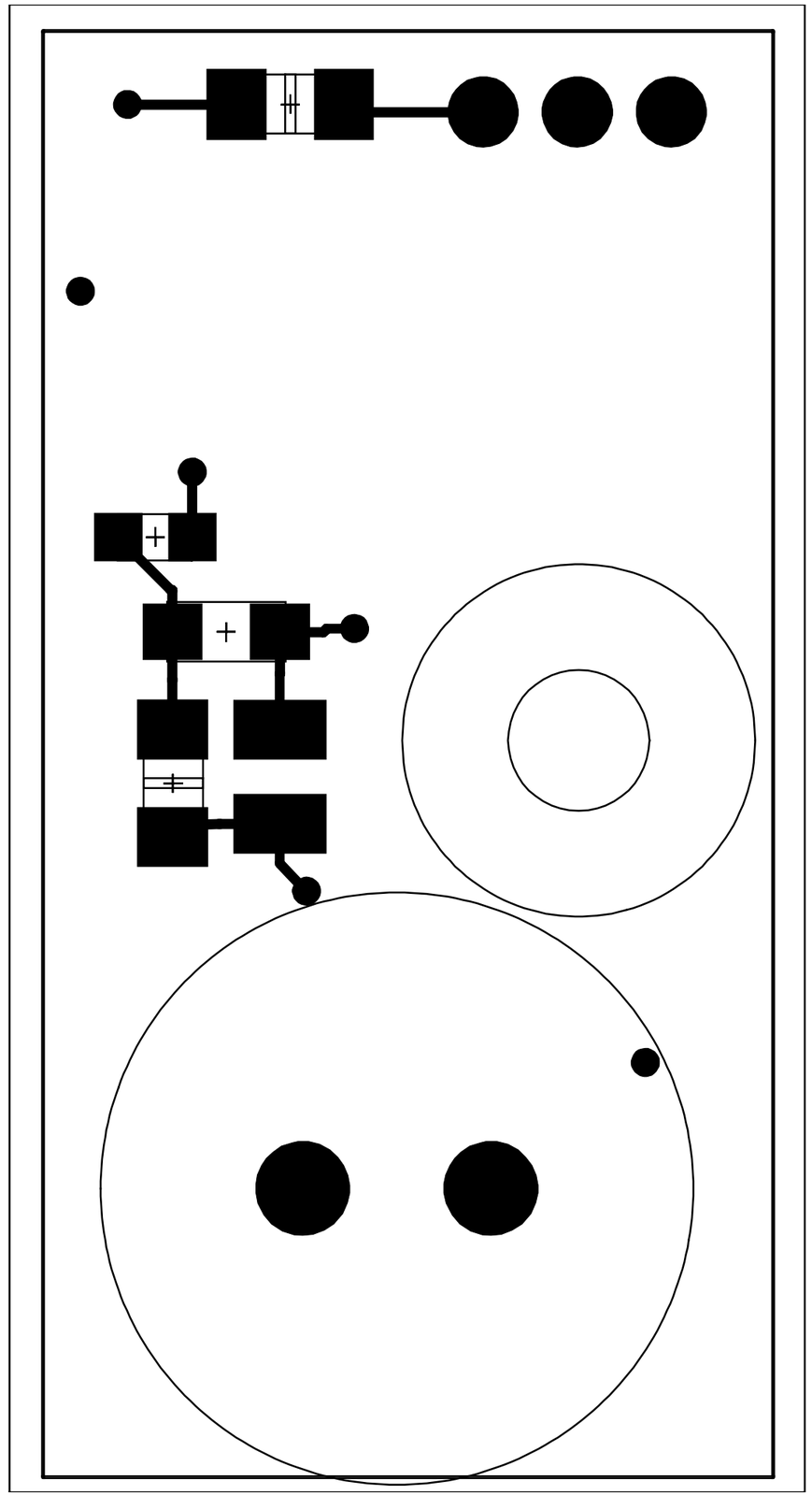

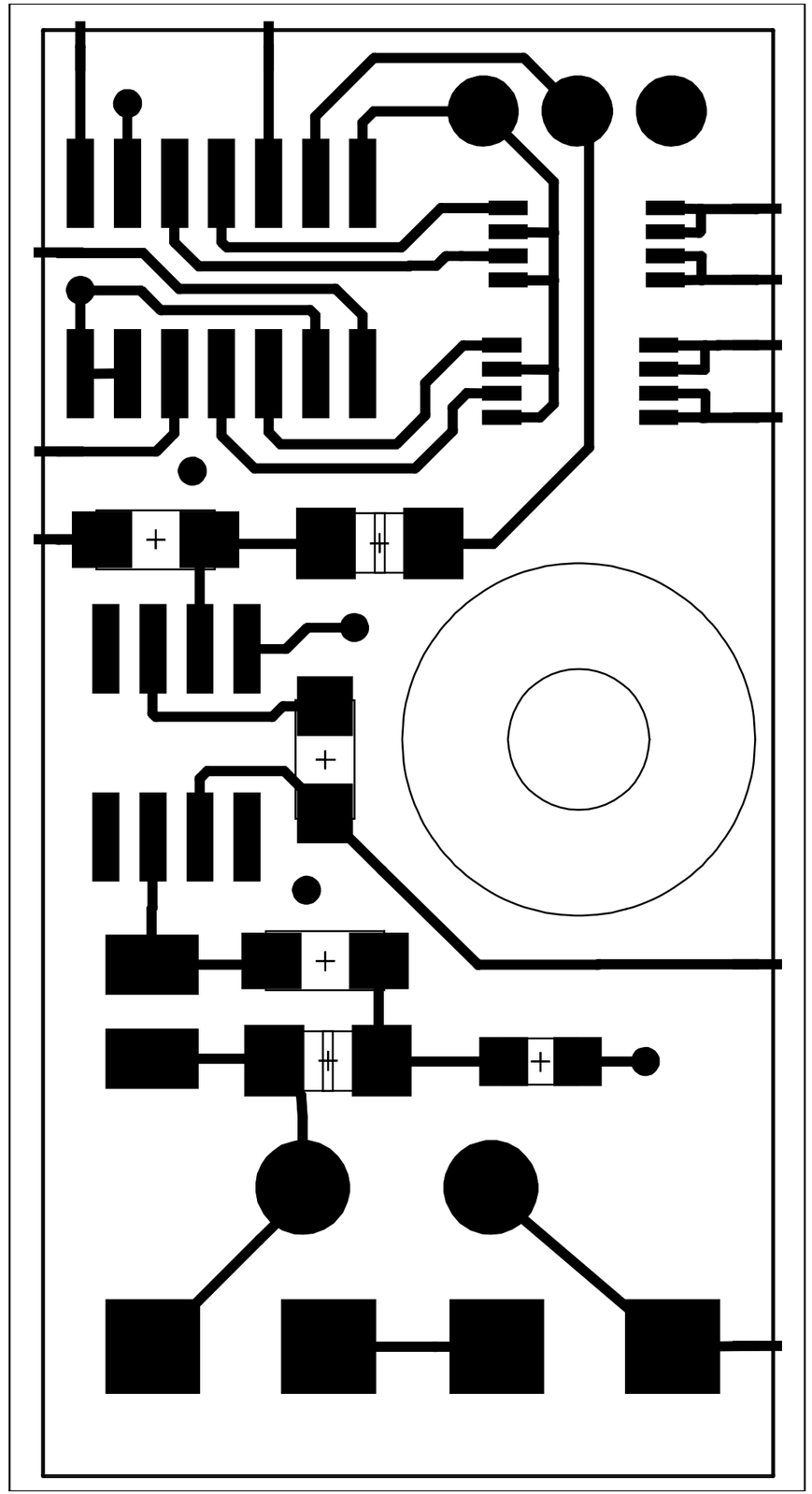

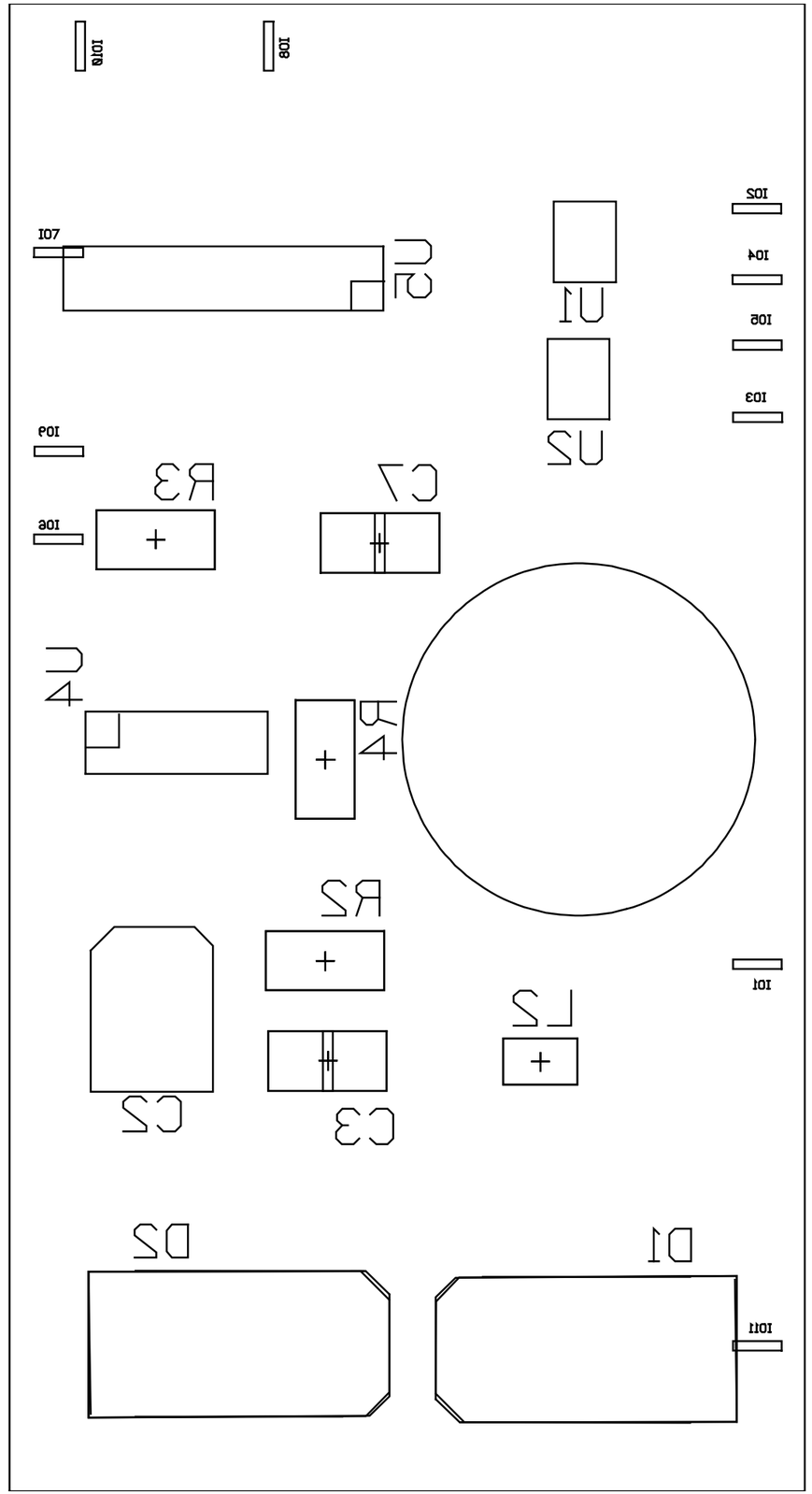
10
10
10
10
10
10
10
10
10
10
10
10
U2
U1
C7
R3
U4
R4
R2
L2
C3
C2
D2
D1