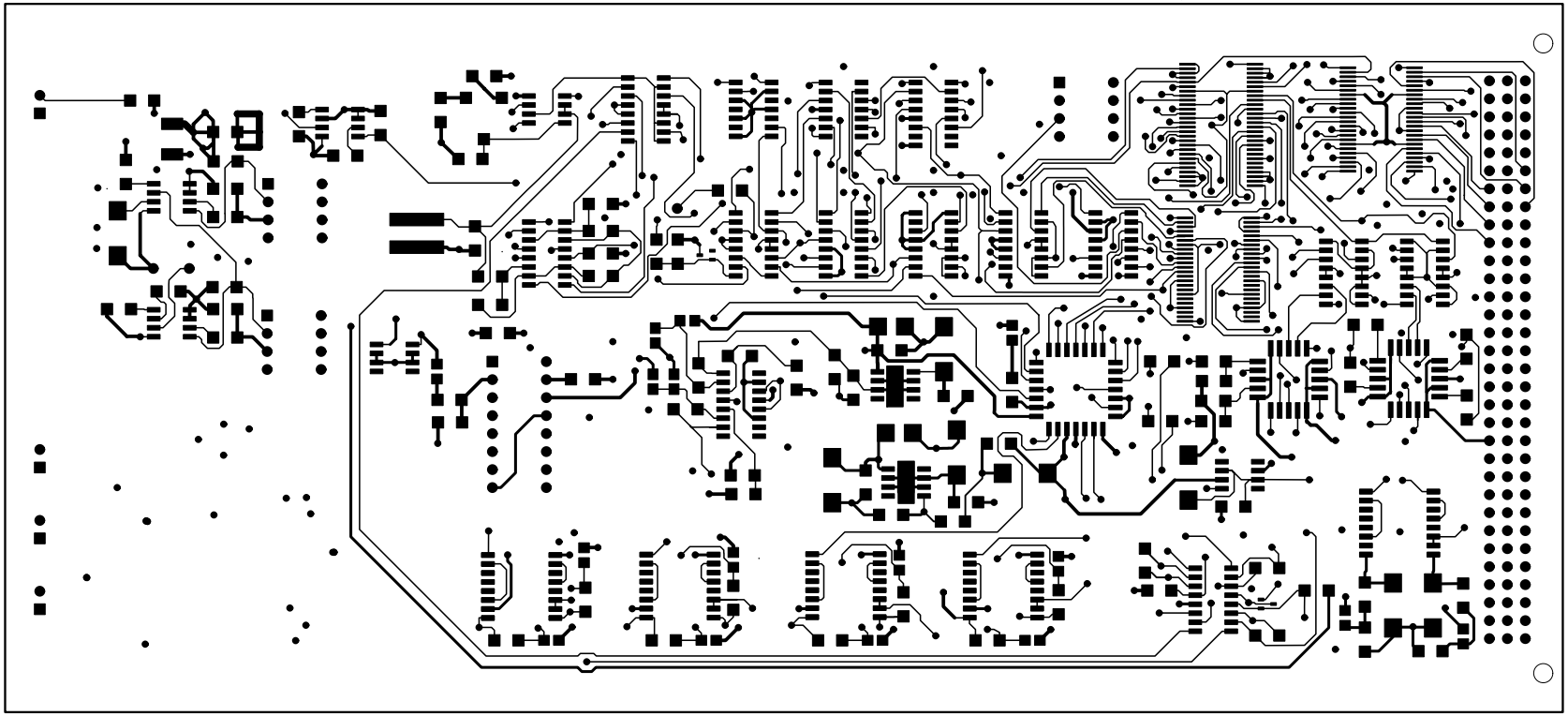Component side