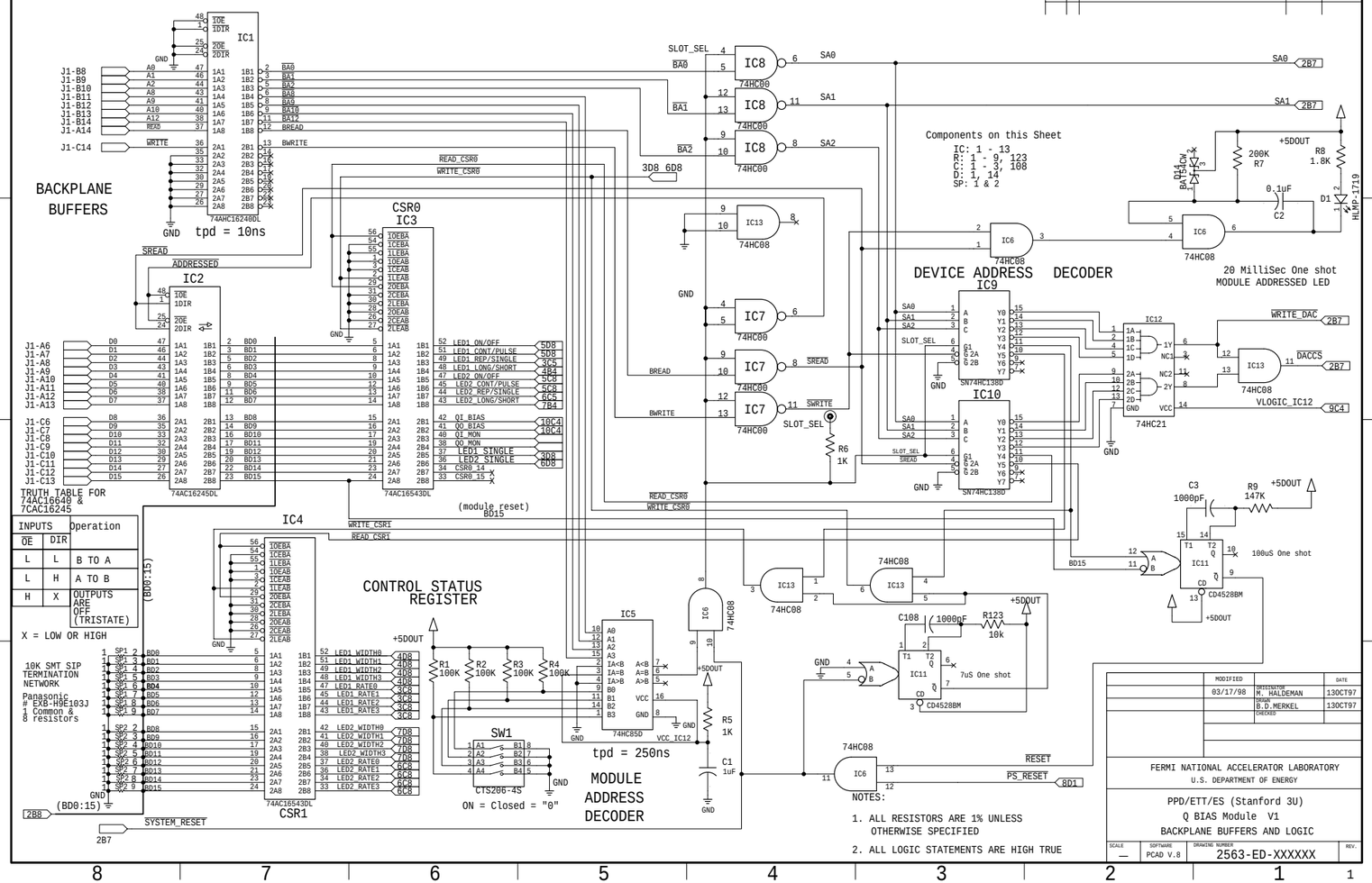

TRUTH TABLE FOR 74AC16640 & 7CAC16245

INPUTS		Operation
OE	DIR	
L	L	B TO A
L	H	A TO B
H	X	OUTPUTS ARE OFF (TRISTATE)

X = LOW OR HIGH