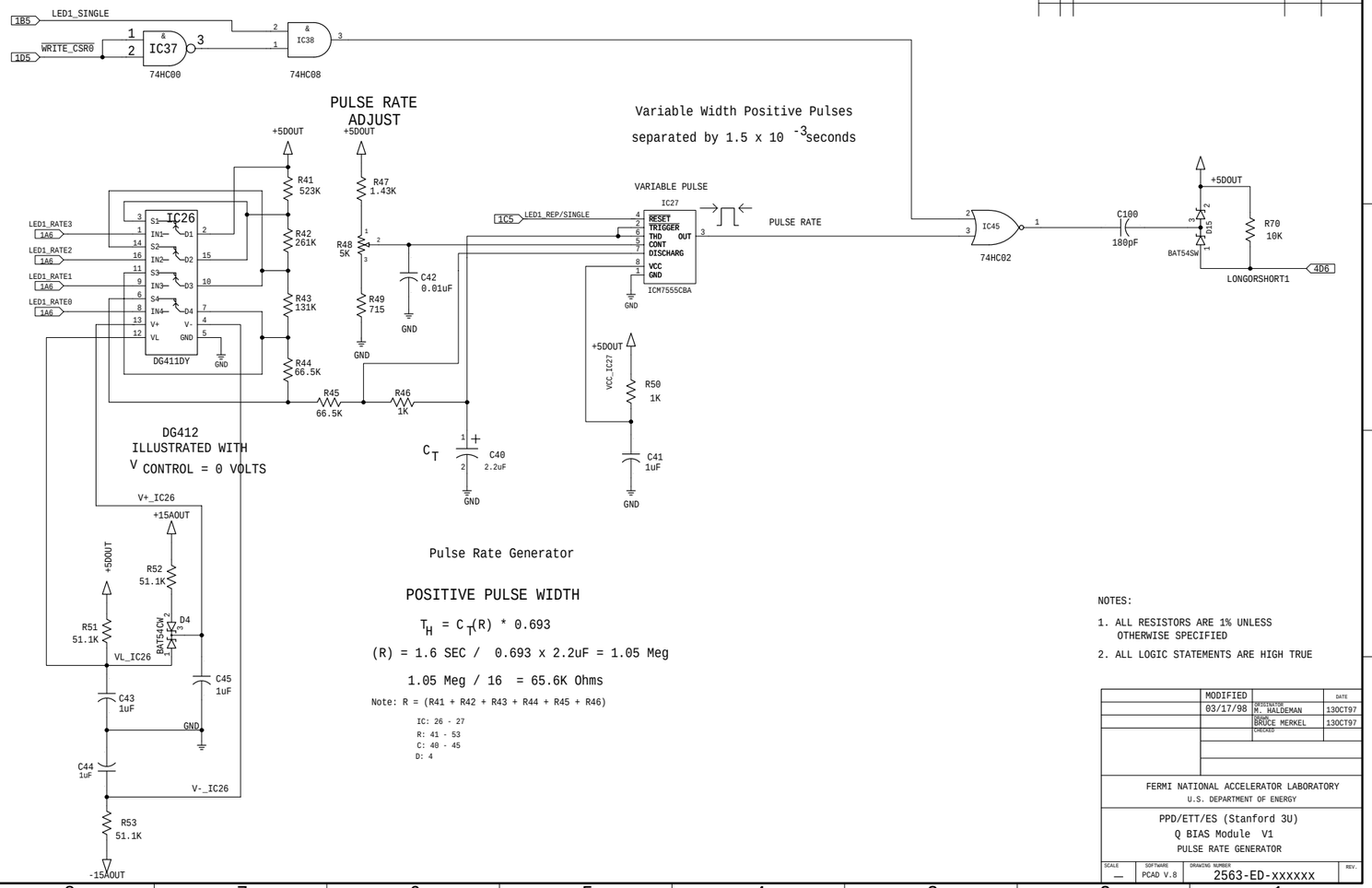
LED1_SINGLE
1B5
WRITE_CSR0
1D5
IC37
74HC00
IC38
74HC08
PULSE RATE ADJUST
+5DOUT
R41 523K
R42 261K
R43 131K
R44 66.5K
R45 66.5K
R46 1K
R47 1.43K
R48 5K
R49 715
C42 0.01uF
GND
IC26
DG411DY
LED1_RATE3
LED1_RATE2
LED1_RATE1
LED1_RATE0
1A6
Variable Width Positive Pulses
separated by 1.5 x 10 -3seconds
VARIABLE PULSE
IC27
ICM7555CBA
1C5
LED1_REP/SINGLE
RESET
TRIGGER
THD
CONT
DISCHARG
OUT
VCC
PULSE RATE
IC45
74HC02
C100 180pF
D15 BAT54SW
R70 10K
LONGORSHORT1
4D6
VCC_IC27
R50 1K
C41 1uF
C40 2.2uF
DG412
ILLUSTRATED WITH
V CONTROL = 0 VOLTS
V+_IC26
+15AOUT
R52 51.1K
R51 51.1K
D4 BAT54CW
VL_IC26
C45 1uF
C43 1uF
C44 1uF
V-_IC26
R53 51.1K
-15AOUT
Pulse Rate Generator
POSITIVE PULSE WIDTH
T_H = C_T(R) * 0.693
(R) = 1.6 SEC / 0.693 x 2.2uF = 1.05 Meg
1.05 Meg / 16 = 65.6K Ohms
Note: R = (R41 + R42 + R43 + R44 + R45 + R46)
IC: 26 - 27
R: 41 - 53
C: 40 - 45
D: 4
NOTES:
1. ALL RESISTORS ARE 1% UNLESS OTHERWISE SPECIFIED
2. ALL LOGIC STATEMENTS ARE HIGH TRUE
MODIFIED
03/17/98
DESIGNED M. HALDEMAN 13OCT97
DRAWN BRUCE MERKEL 13OCT97
CHECKED
FERMI NATIONAL ACCELERATOR LABORATORY
U.S. DEPARTMENT OF ENERGY
PPD/ETT/ES (Stanford 3U)
Q BIAS Module V1
PULSE RATE GENERATOR
SCALE —
SOFTWARE PCAD V.8
DRAWING NUMBER 2563-ED-xxxxxx
REV.
3