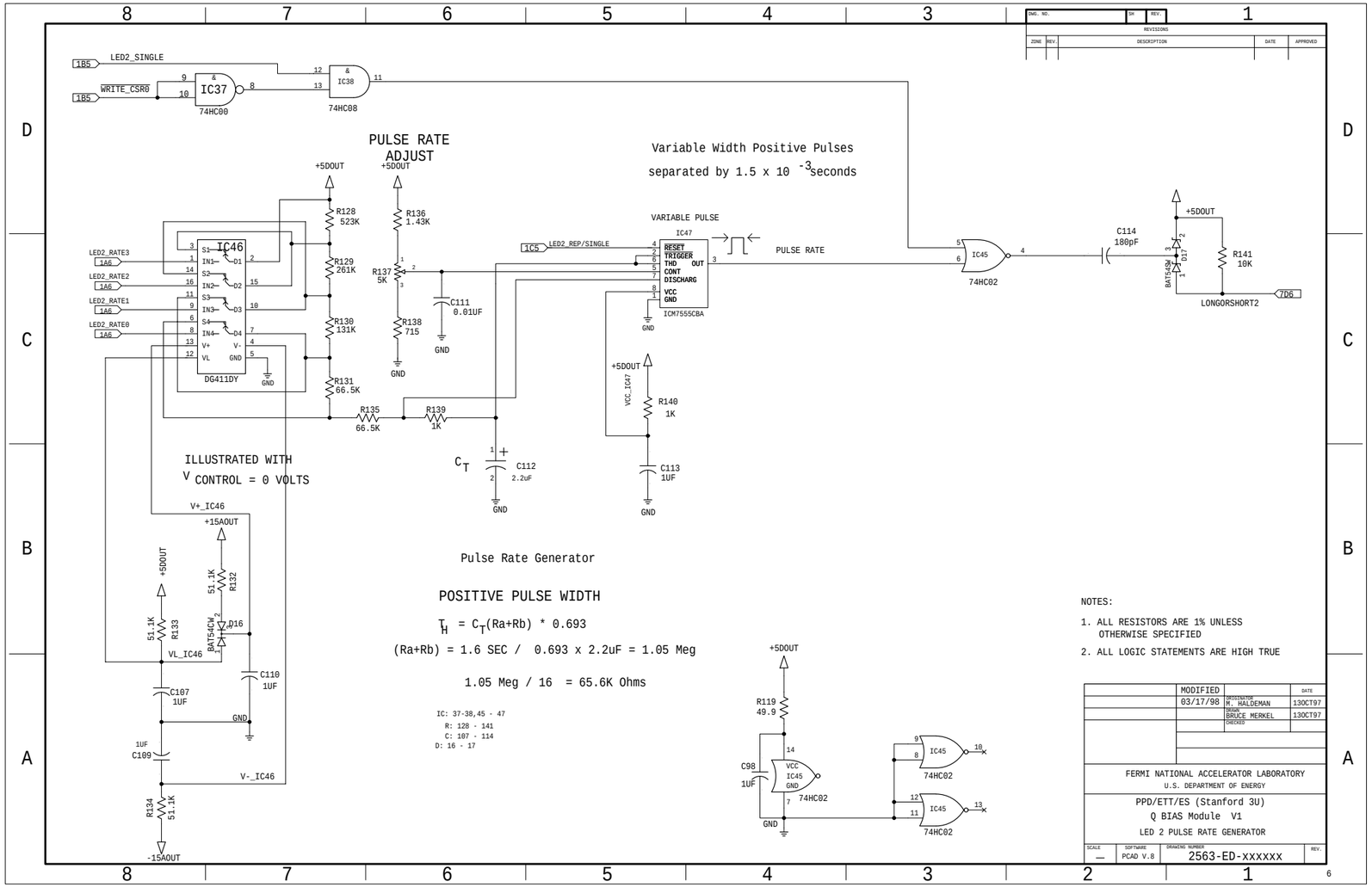
LED2_SINGLE
1B5
WRITE_CSR0
IC37
74HC00
IC38
74HC08
PULSE RATE ADJUST
+5DOUT
R128 523K
R129 261K
R130 131K
R131 66.5K
R136 1.43K
R137 5K
R138 715
C111 0.01UF
GND
IC46
DG411DY
LED2_RATE3
LED2_RATE2
LED2_RATE1
LED2_RATE0
1A6
Variable Width Positive Pulses
separated by 1.5 x 10 -3 seconds
VARIABLE PULSE
IC47
ICM7555CBA
RESET
TRIGGER
THD OUT
CONT
DISCHARG
VCC
GND
1C5
LED2_REP/SINGLE
PULSE RATE
IC45
74HC02
C114 180pF
D11
BAT54CW
R141 10K
LONGORSHORT2
7D6
R135 66.5K
R139 1K
C112 2.2uF
R140 1K
C113 1UF
VCC_IC47
ILLUSTRATED WITH
V CONTROL = 0 VOLTS
V+_IC46
+15AOUT
51.1K R132
51.1K R133
D16
VL_IC46
C110 1UF
C107 1UF
1UF C109
V-_IC46
R134 51.1K
-15AOUT
Pulse Rate Generator
POSITIVE PULSE WIDTH
T H = C T (Ra+Rb) * 0.693
(Ra+Rb) = 1.6 SEC / 0.693 x 2.2uF = 1.05 Meg
1.05 Meg / 16 = 65.6K Ohms
IC: 37-38,45 - 47
R: 128 - 141
C: 107 - 114
D: 16 - 17
R119 49.9
C98 1UF
VCC
IC45
GND
74HC02
NOTES:
1. ALL RESISTORS ARE 1% UNLESS OTHERWISE SPECIFIED
2. ALL LOGIC STATEMENTS ARE HIGH TRUE
MODIFIED
03/17/98
DRAFTSMAN M. HALDEMAN 13OCT97
DESIGN BRUCE MERKEL 13OCT97
CHECKED
FERMI NATIONAL ACCELERATOR LABORATORY
U.S. DEPARTMENT OF ENERGY
PPD/ETT/ES (Stanford 3U)
Q BIAS Module V1
LED 2 PULSE RATE GENERATOR
SCALE —
SOFTWARE PCAD V.8
DRAWING NUMBER 2563-ED-XXXXXX
REV.