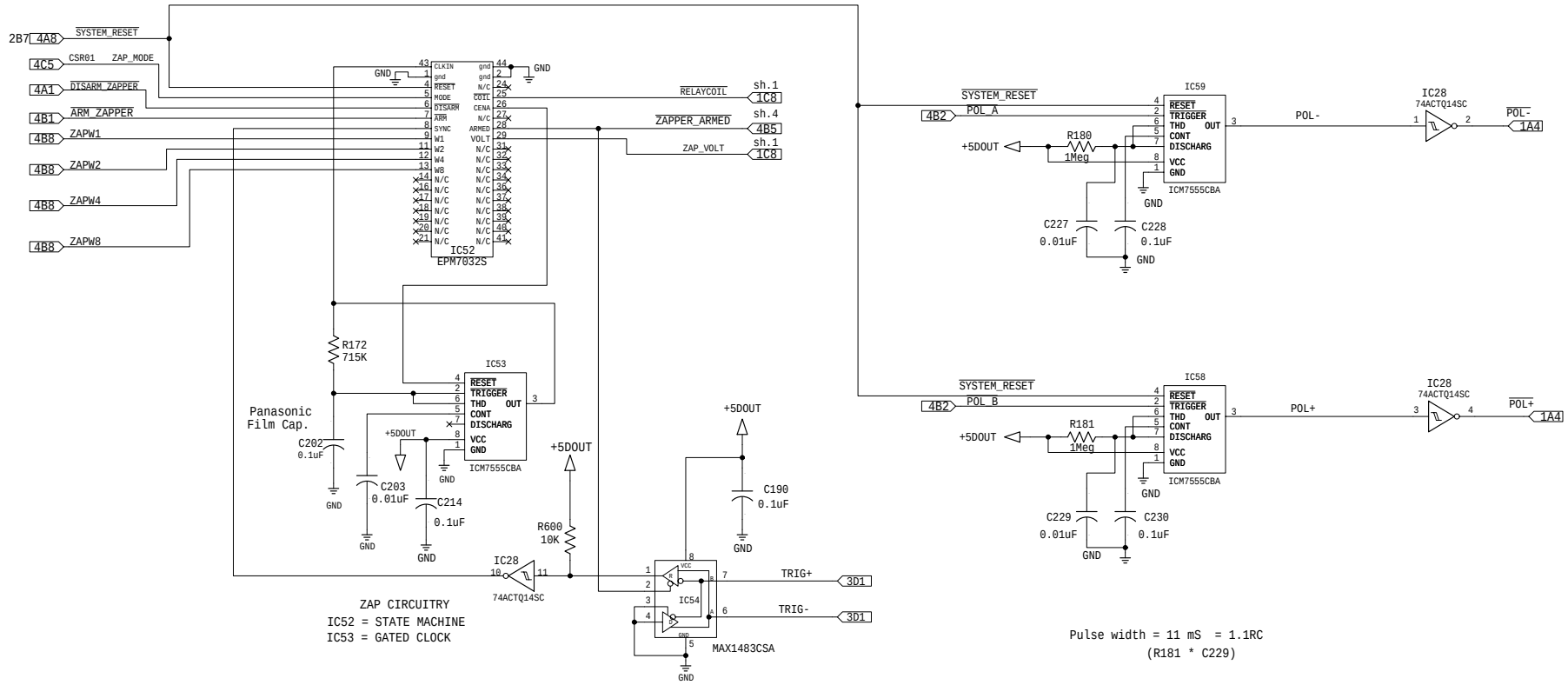

$$f = \frac{1}{1.4R_{172}C_{202}} = \frac{1}{T}$$

$$1/F = T = 1.4RC = 7.14\times10^{-2} = 0.0714 \text{ SECONDS}$$

R = R172 = 715K OHMS

C = C202 = 0.1UF

NOTES:

1. ALL RESISTORS ARE 1% UNLESS OTHERWISE SPECIFIED
2. ALL LOGIC STATEMENTS ARE HIGH TRUE

	MODIFIED		DATE
	7/24/97	ORIGINATOR M. HALDEMAN	09SEP96
		DRAWN D. VAN LEESTEN	19NOV96
		CHECKED	

FERMI NATIONAL ACCELERATOR LABORATORY
U.S. DEPARTMENT OF ENERGY

RESEARCH DIVISION
STANFORD SQUID 3U MODULE

SCALE	SOFTWARE	DRAWING NUMBER	REV.
—	PCAD V.8	2563-ED-216092	