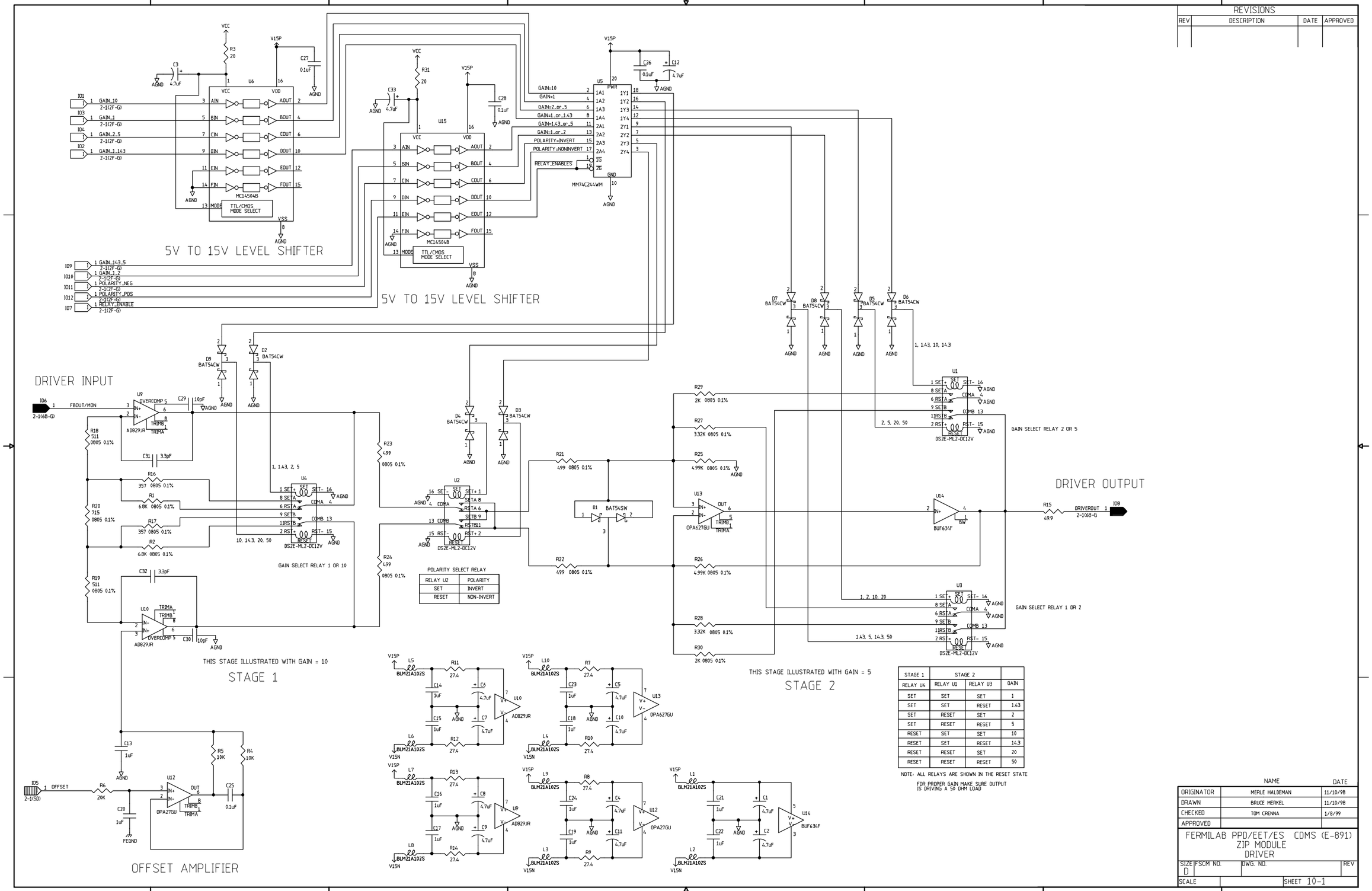
5V TO 15V LEVEL SHIFTER
5V TO 15V LEVEL SHIFTER
DRIVER INPUT
DRIVER OUTPUT
STAGE 1
THIS STAGE ILLUSTRATED WITH GAIN = 10
STAGE 2
THIS STAGE ILLUSTRATED WITH GAIN = 5
OFFSET AMPLIFIER
GAIN SELECT RELAY 2 OR 5
GAIN SELECT RELAY 1 OR 10
GAIN SELECT RELAY 1 OR 2
POLARITY SELECT RELAY
RELAY U2 | POLARITY
SET | INVERT
RESET | NON-INVERT
STAGE 1 | STAGE 2 | |
RELAY U4 | RELAY U1 | RELAY U3 | GAIN
SET | SET | SET | 1
SET | SET | RESET | 1.43
SET | RESET | SET | 2
SET | RESET | RESET | 5
RESET | SET | SET | 10
RESET | SET | RESET | 14.3
RESET | RESET | SET | 20
RESET | RESET | RESET | 50
NOTE: ALL RELAYS ARE SHOWN IN THE RESET STATE
FOR PROPER GAIN MAKE SURE OUTPUT IS DRIVING A 50 OHM LOAD
REVISIONS
REV | DESCRIPTION | DATE | APPROVED
NAME | DATE
ORIGINATOR | MERLE HALDEMAN | 11/10/98
DRAWN | BRUCE MERKEL | 11/10/98
CHECKED | TOM CRENNA | 1/8/99
APPROVED
FERMILAB PPD/EET/ES CDMS (E-891)
ZIP MODULE
DRIVER
SIZE D | FSCM NO. | DWG. NO. | REV
SCALE | SHEET 10-1

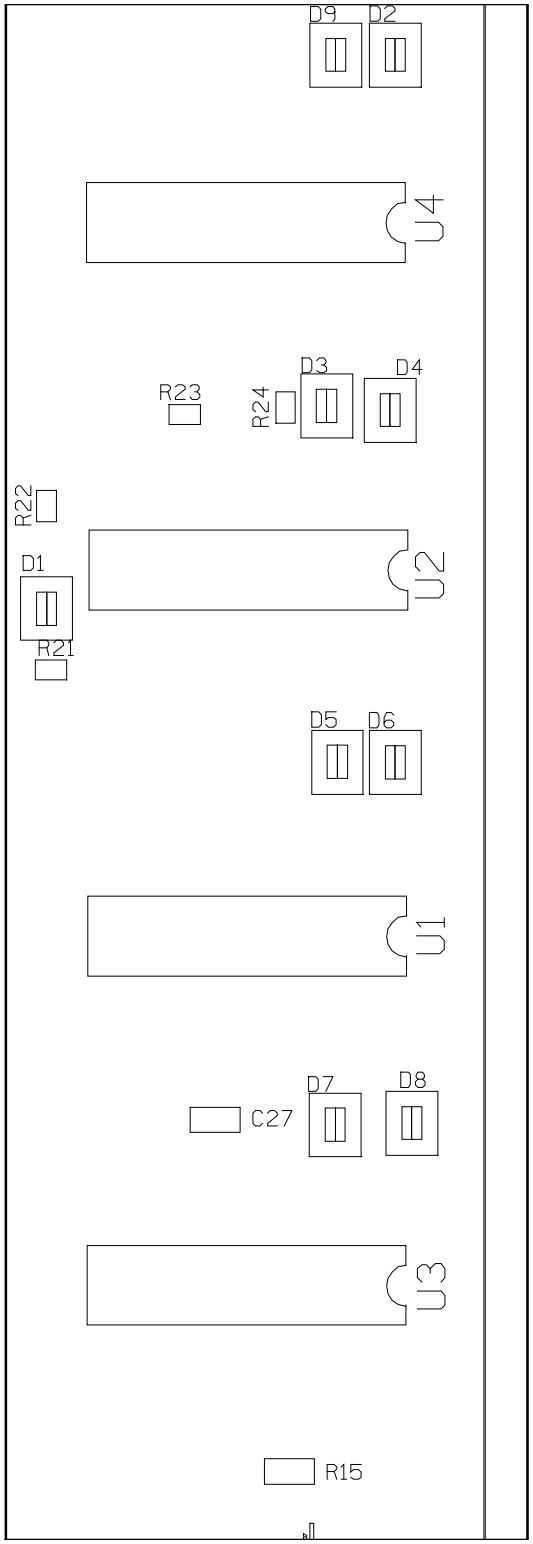
D9
D2
U4
R23
R24
D3
D4
R22
U2
D1
R21
D5
D6
U1
D7
D8
C27
U3
R15

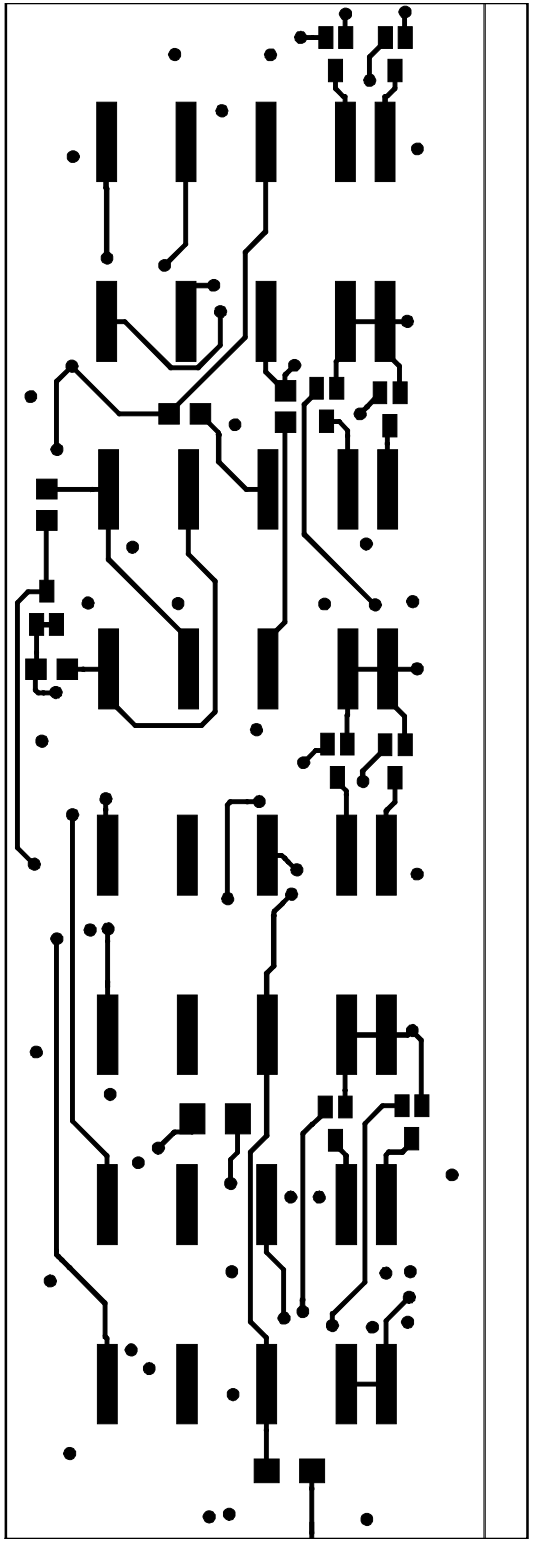

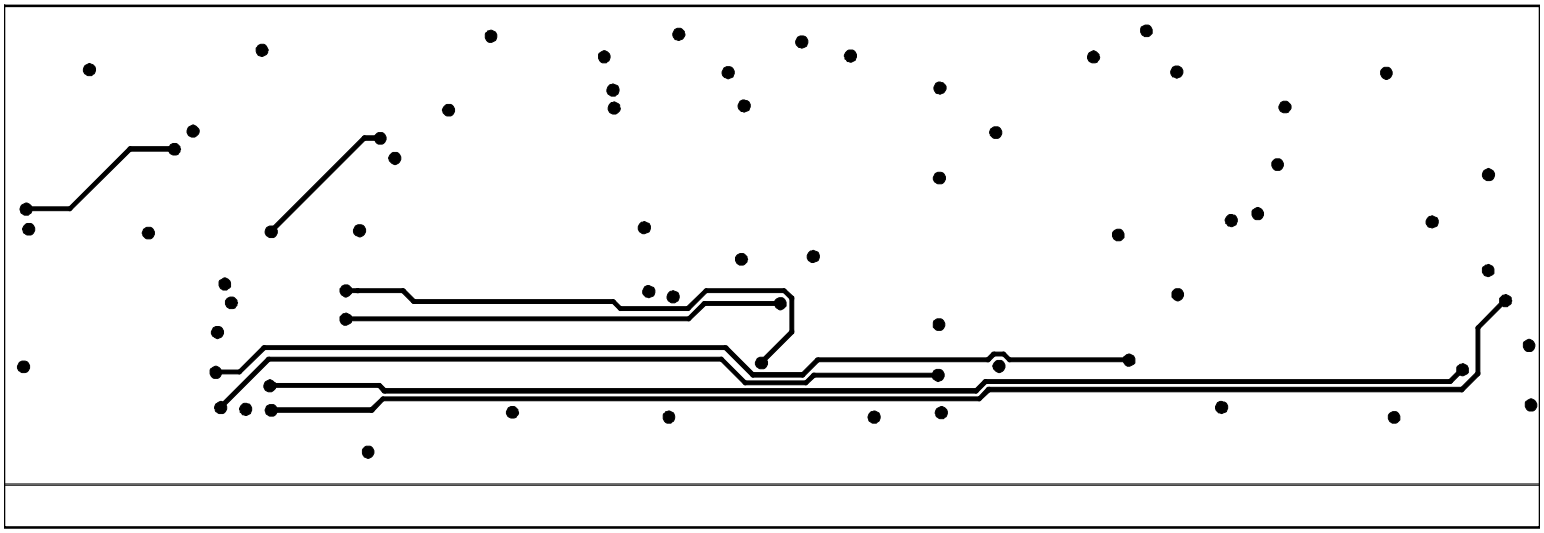

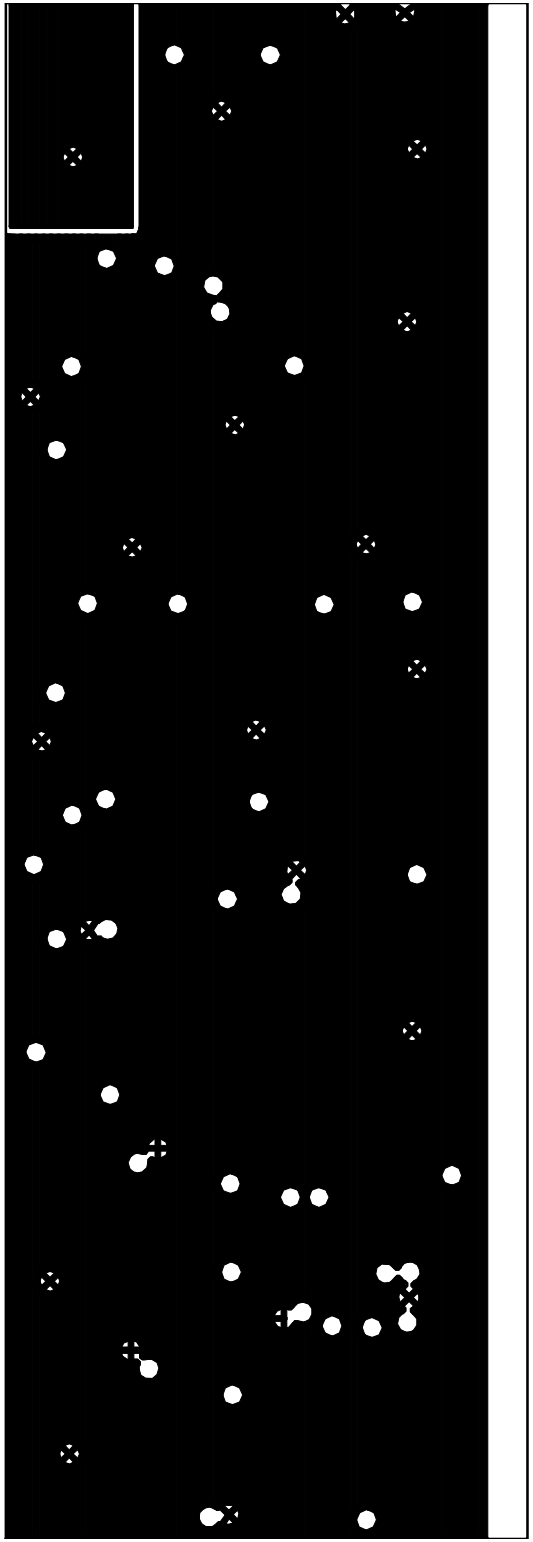

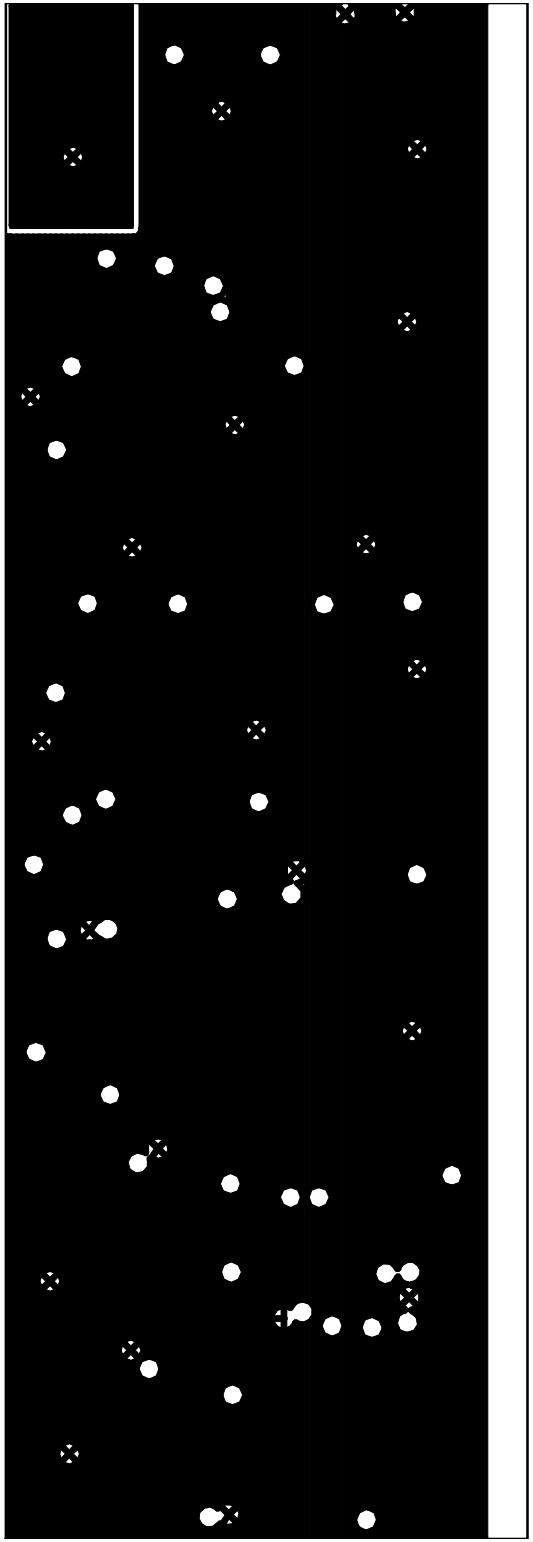

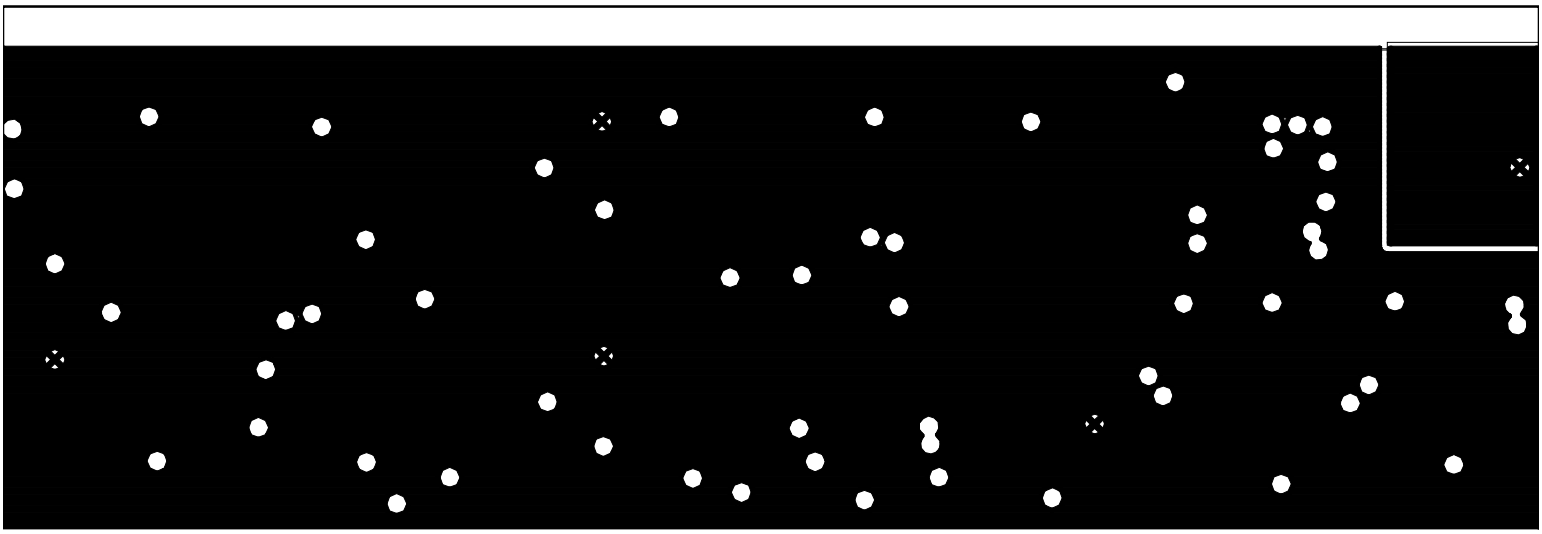

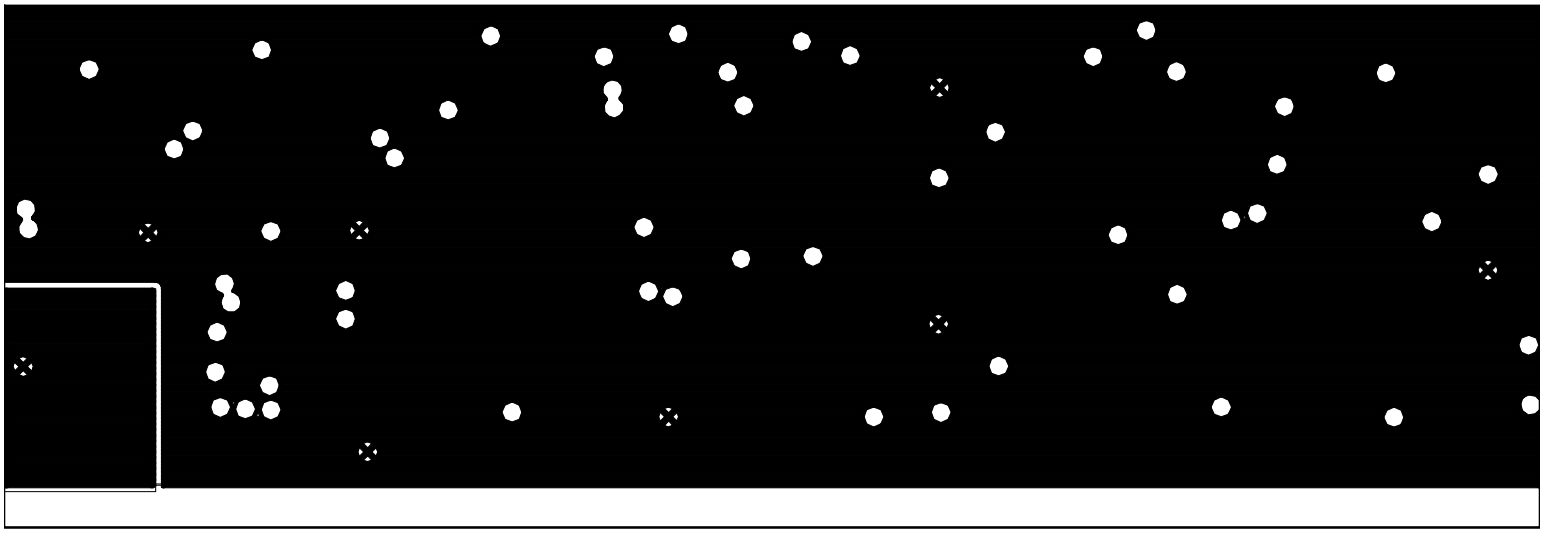

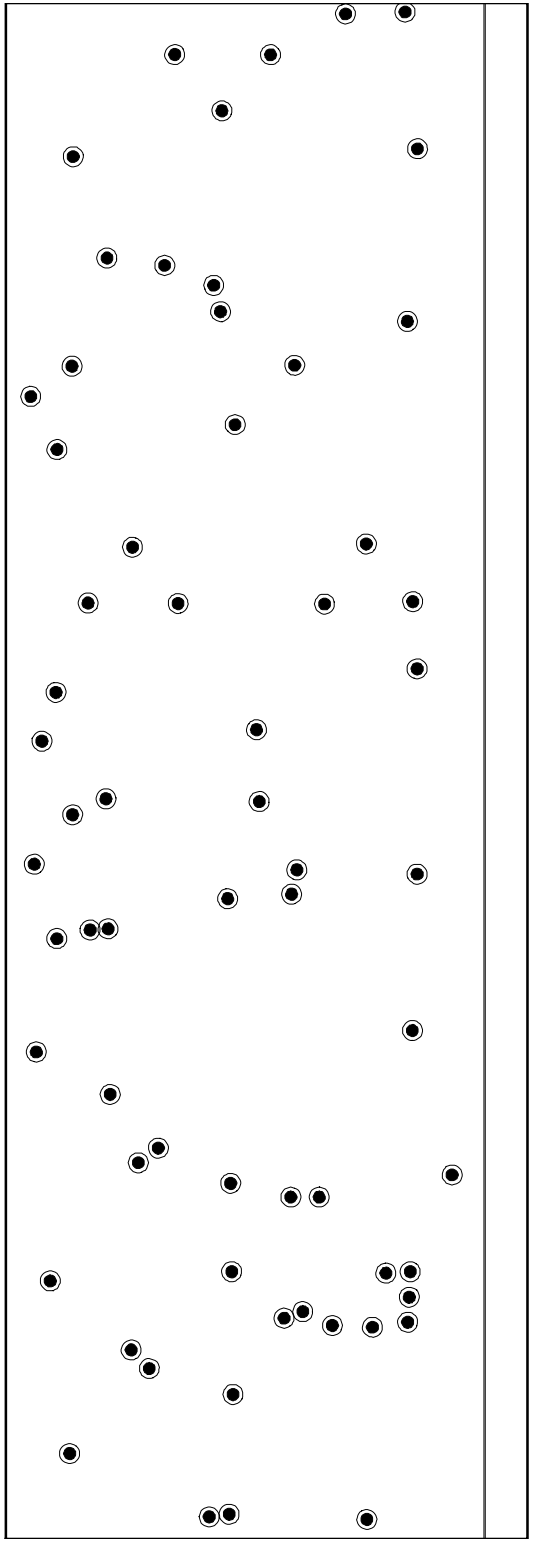

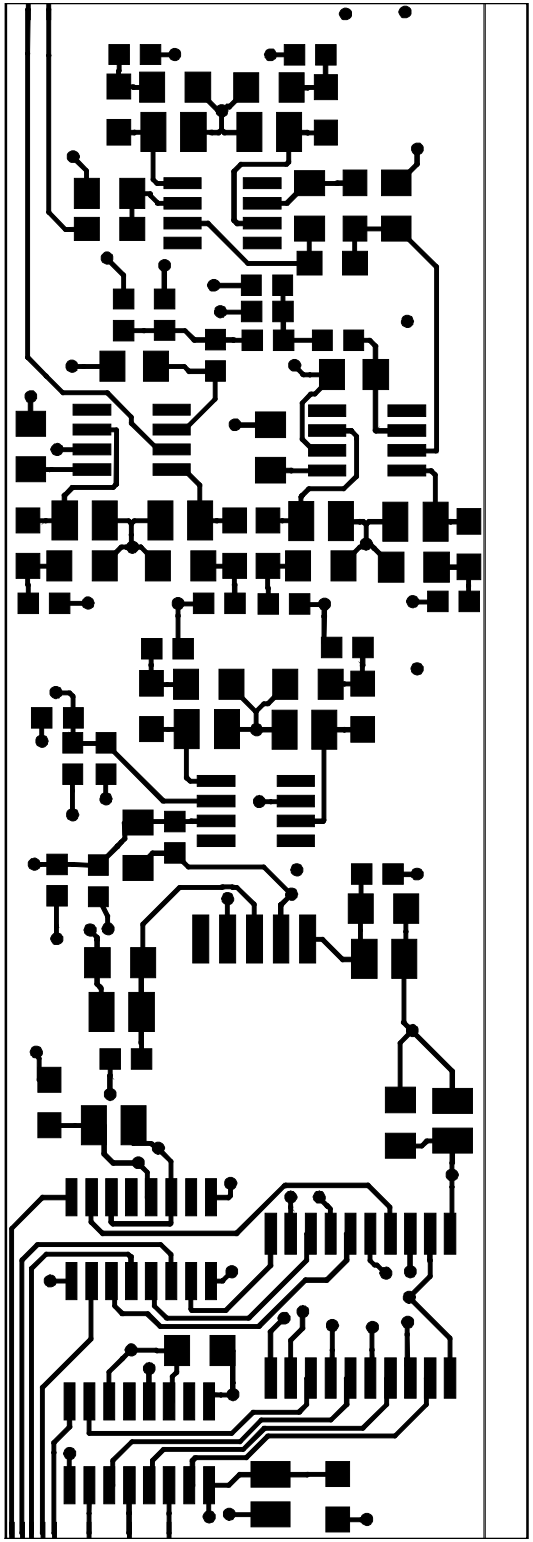

L3
C19
C24
L9
R9
R8
C11
C4
R5
C13
C20
R6
C22
U12
R4
R2
R10
R1
R17
R19
R18
C31
Q2
C32
Q1
Q3
C29
C30
R13
C8
C9
R14
R11
C6
C7
R12
C16
C17
C14
C15
L7
L4
L8
L5
L10
L6
C18
C23
R25
R29
R10
R24
R7
C10
C5
C34
R28
R30
R26
U13
L1
C21
C2
C22
C1
L2
C33
R31
C25
C12
U14
U12
U5
C28
U9
C3
R3