REVISIONS			
REV	DESCRIPTION	DATE	APPROVED
0	USE FOR BOTH 10 & 5 VOLT REFERENCE	3/23/99	B MERKEL

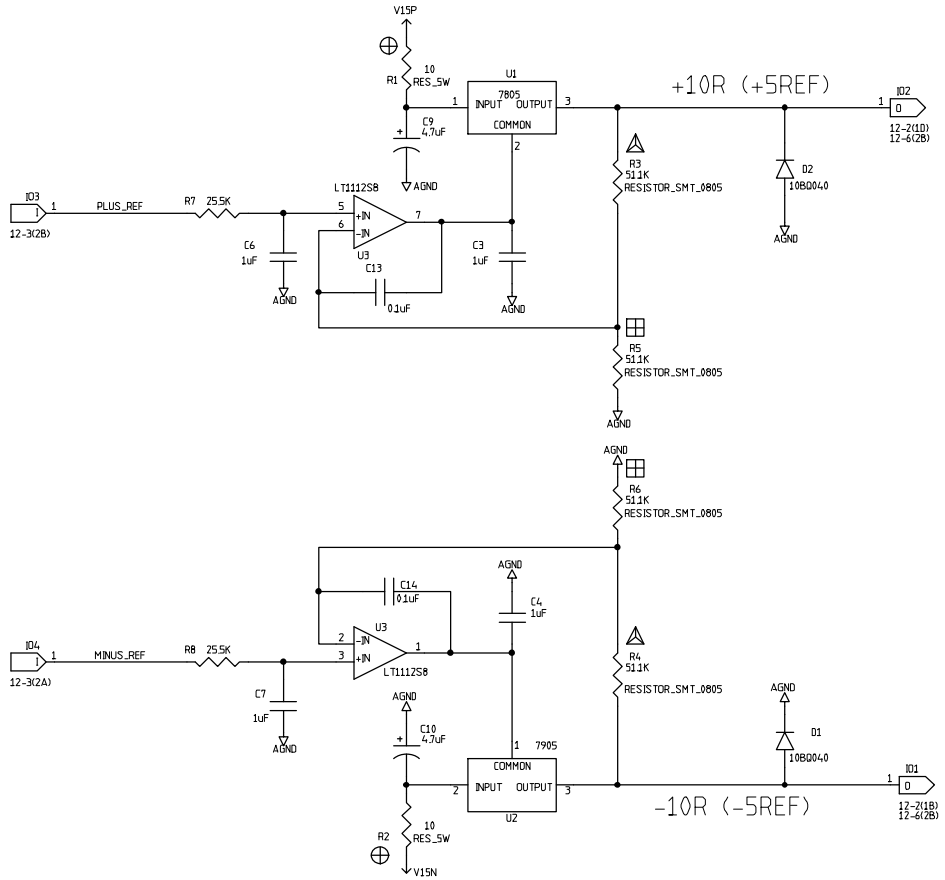

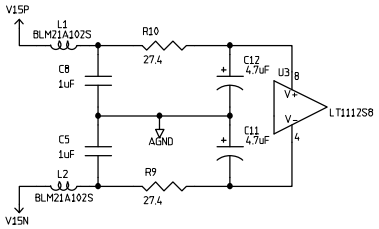

ALL VALUES SHOWN FOR

10 VOLT REFERENCE

USE VALUES BELOW FOR

5 VOLT REFERENCE

⊕ 240 OHM 5W RESISTOR
△ 25.5K OHM RESISTOR
⊞ RESISTOR NOT INSTALLED

	NAME	DATE
ORIGINATOR	MERLE HALDEMAN	12/01/98
DRAWN	BRUCE MERKEL	12/01/98
CHECKED	TOM CRENNA	1/8/99
APPROVED		

FERMILAB PPD/ ETT/ ES CDMS(E-891)
ZIP MODULE
DAC +/- VOLTAGE REFERENCES

SIZE	FSCM NO.	DWG. NO.	REV
C			
SCALE		SHEET 12-4	

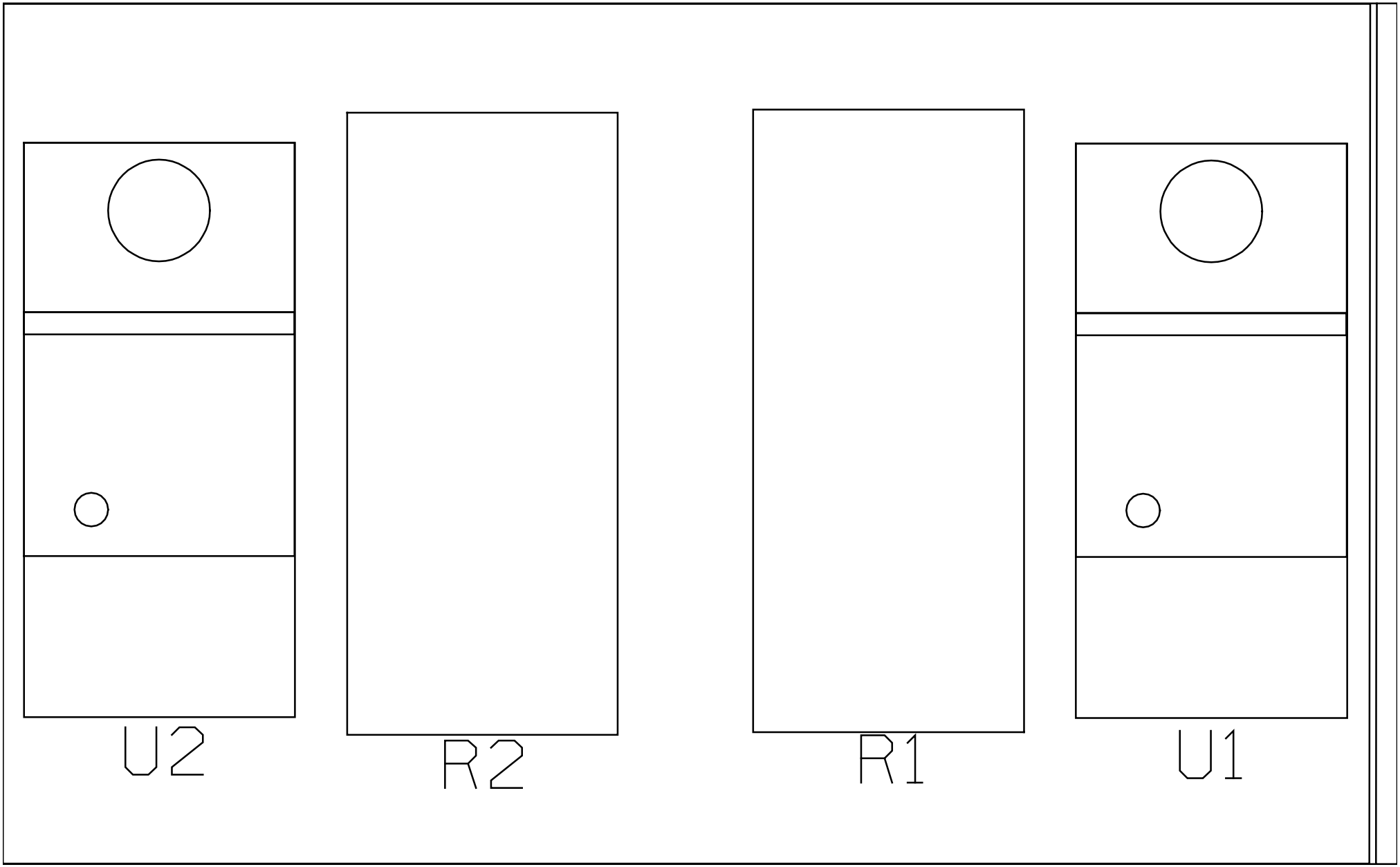
U2
R2
R1
U1

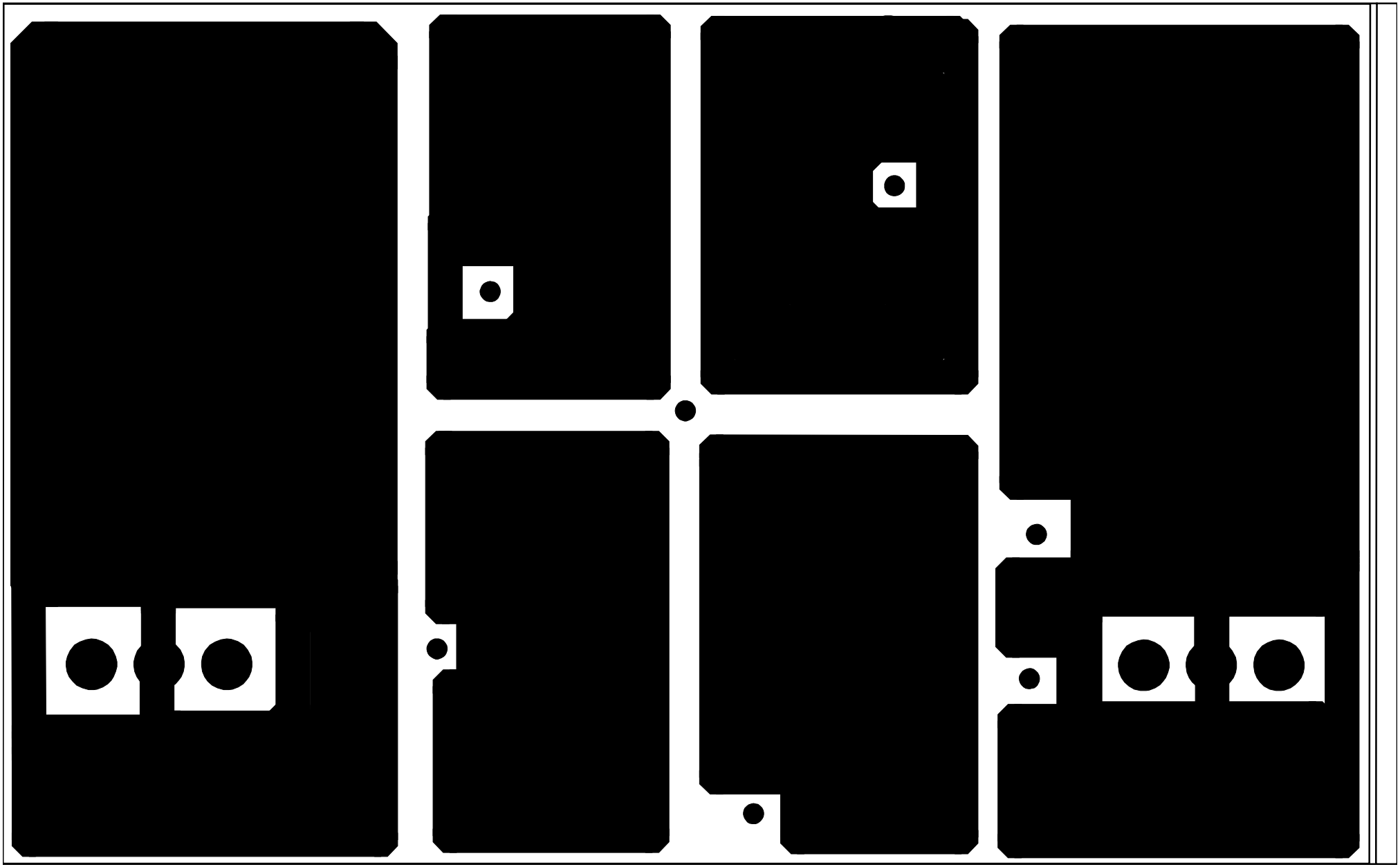

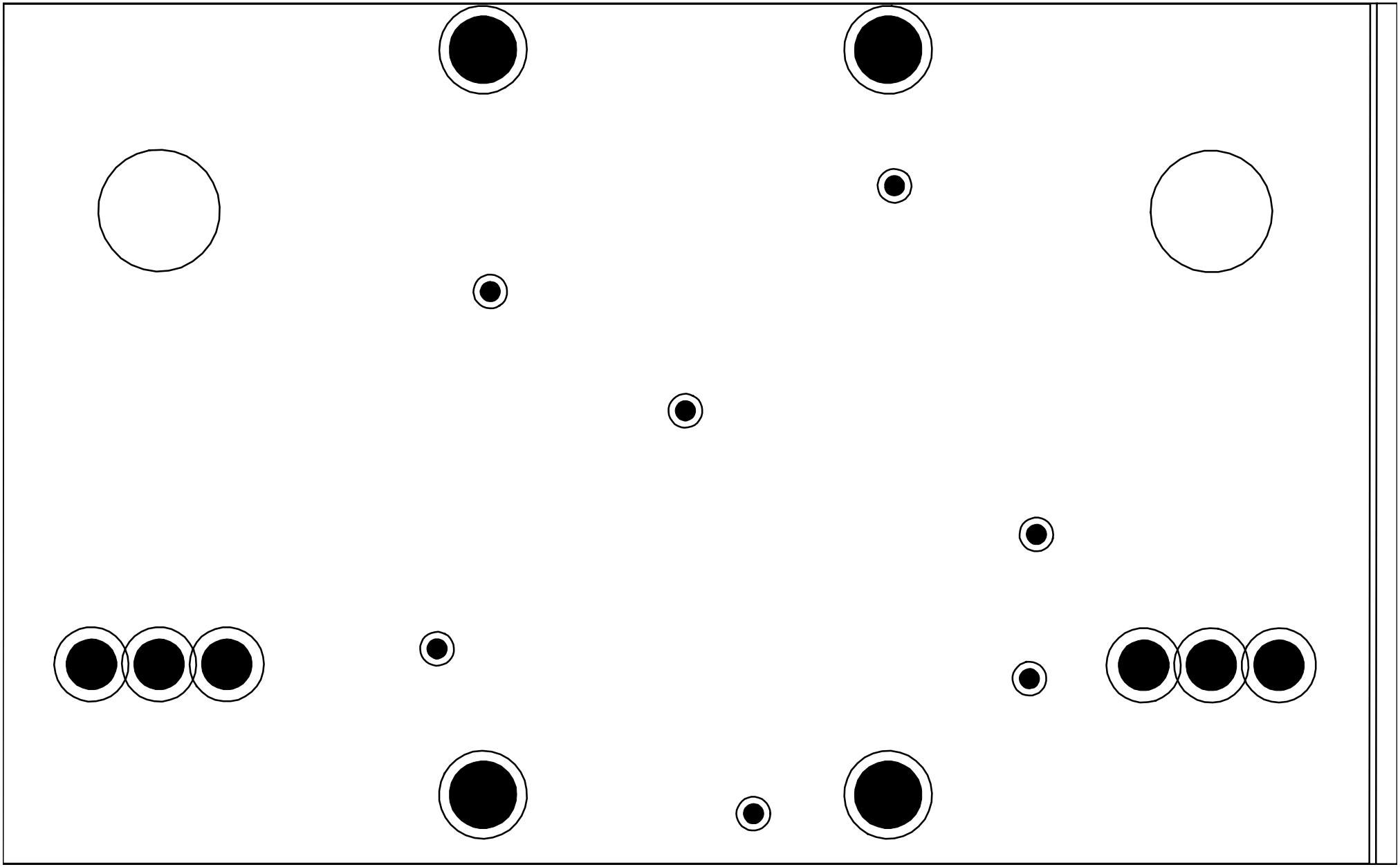

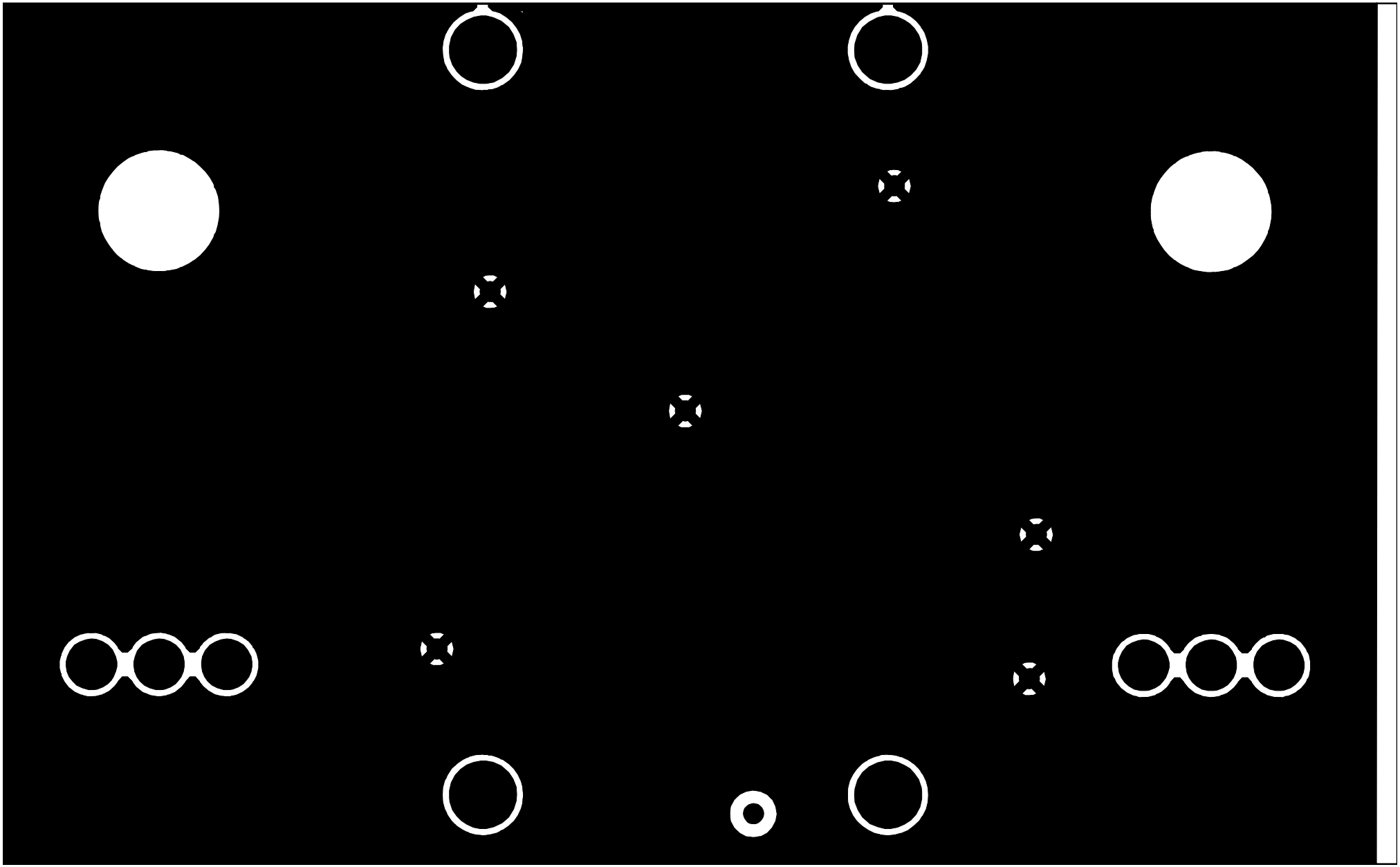

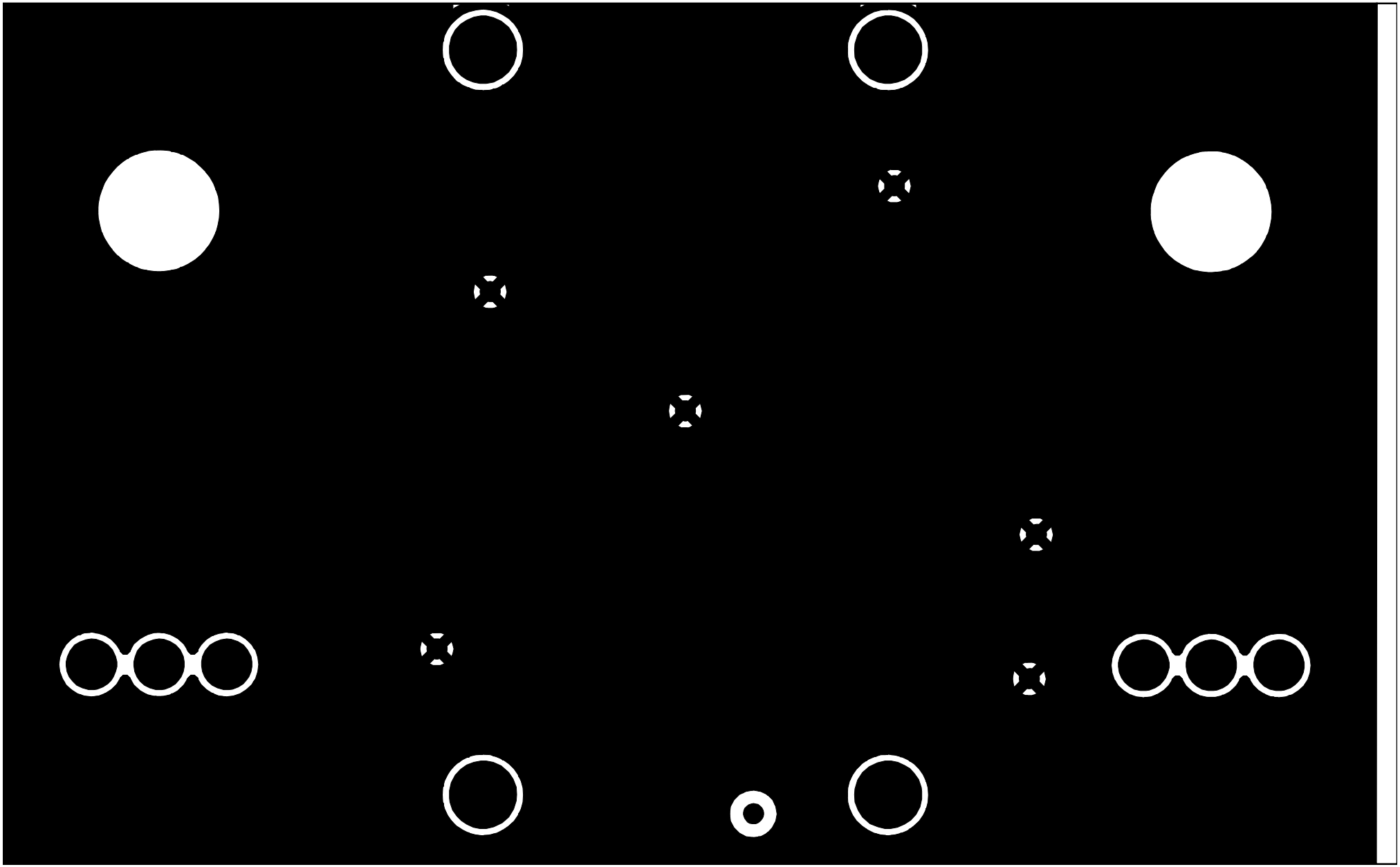

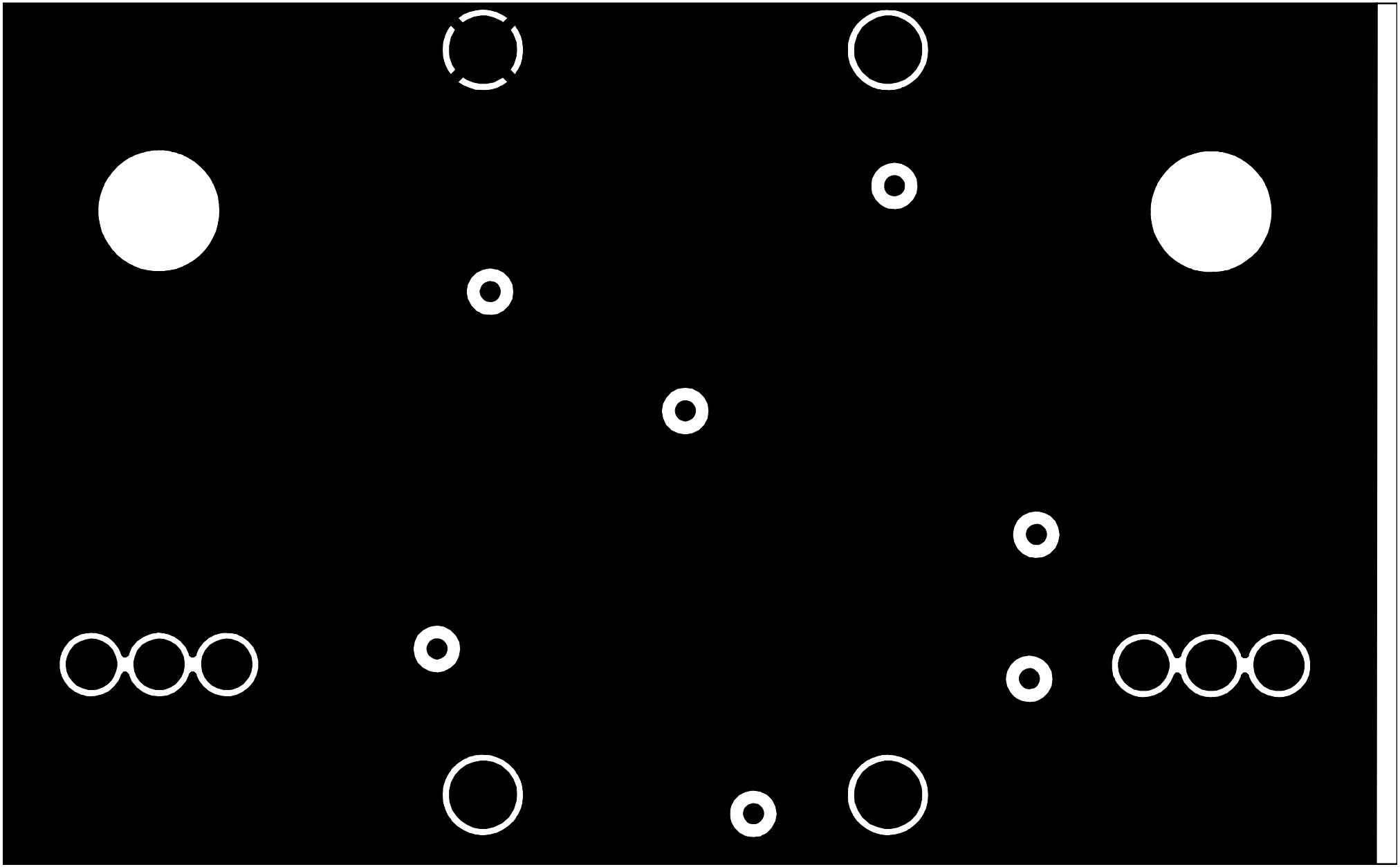

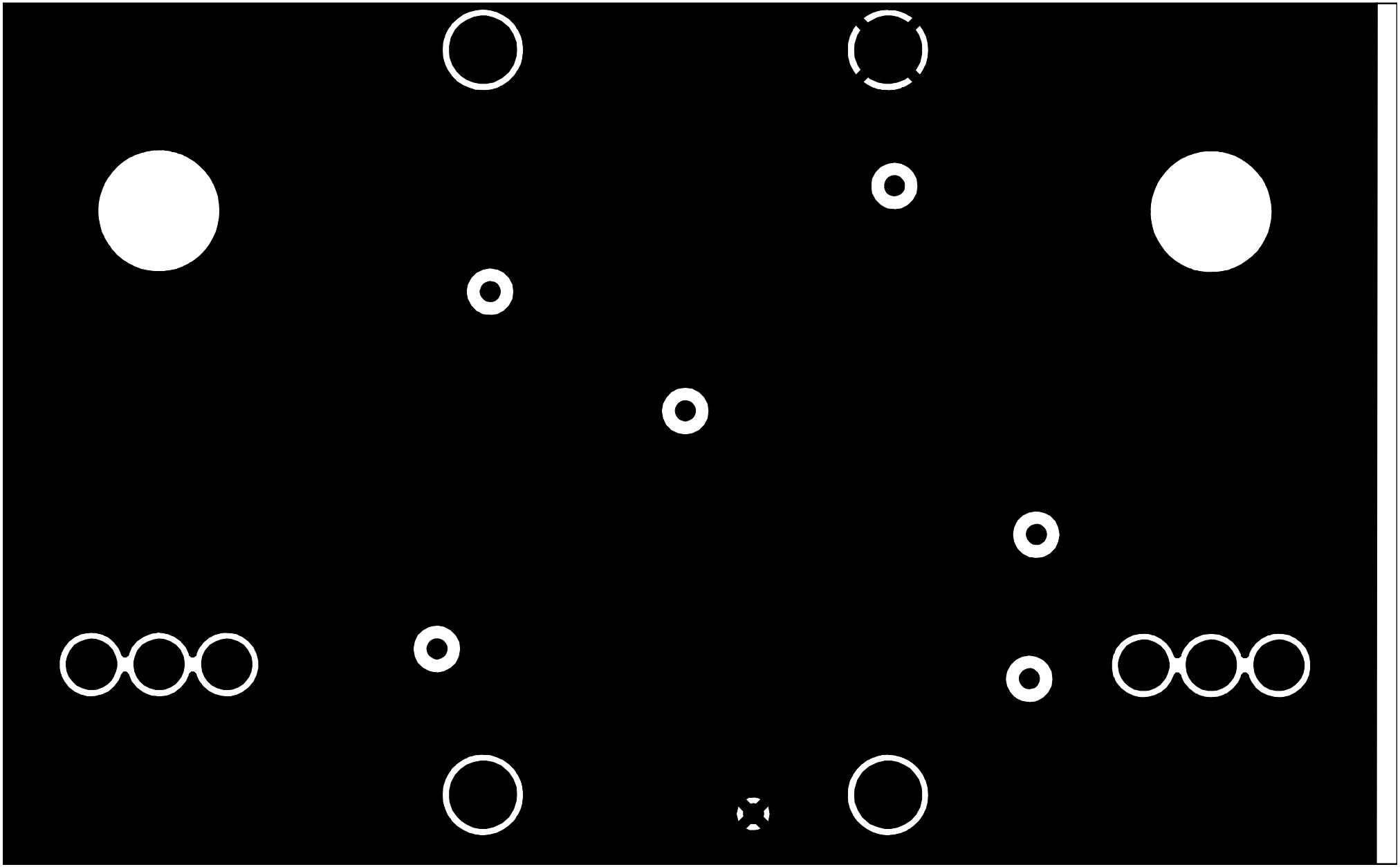

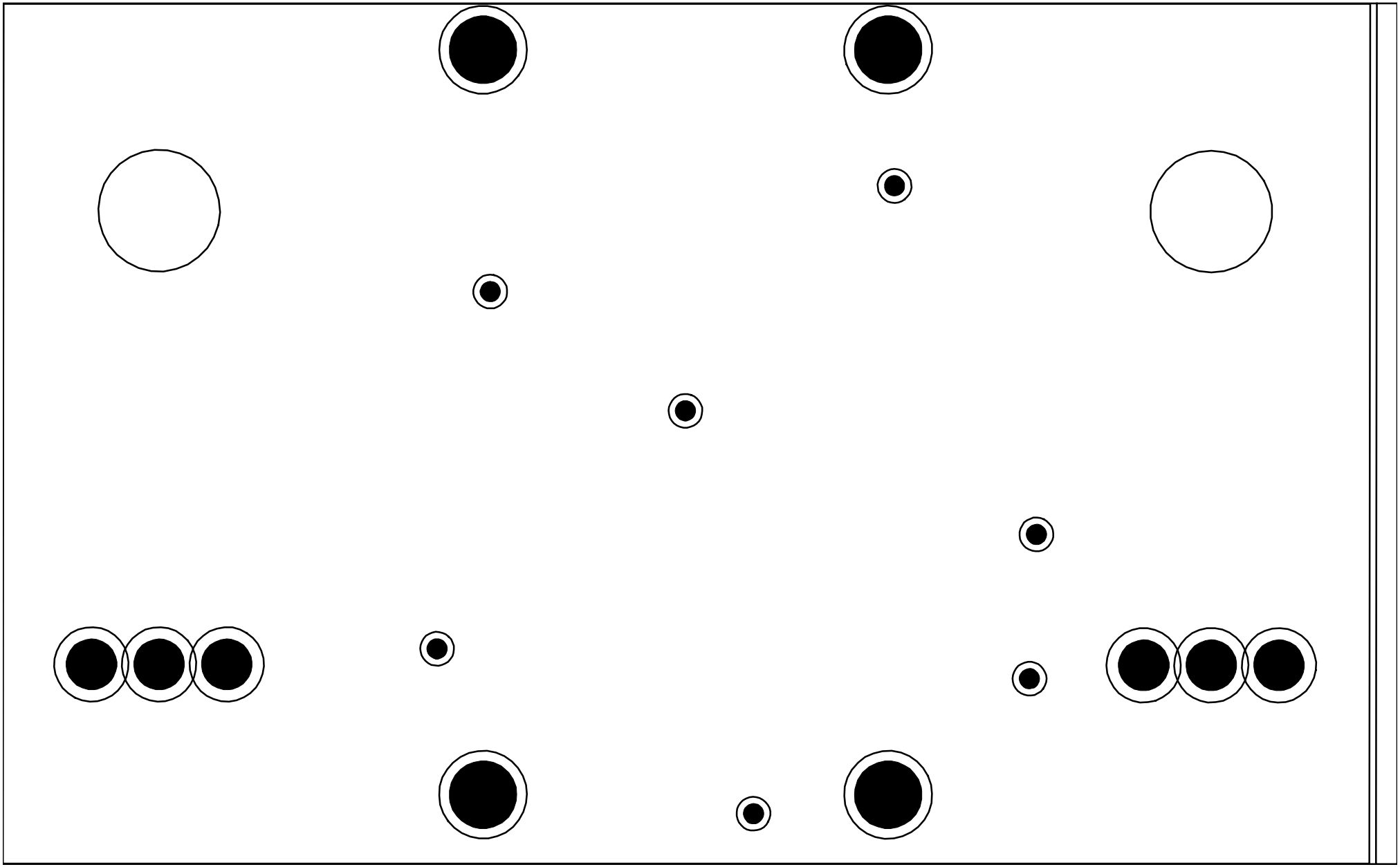

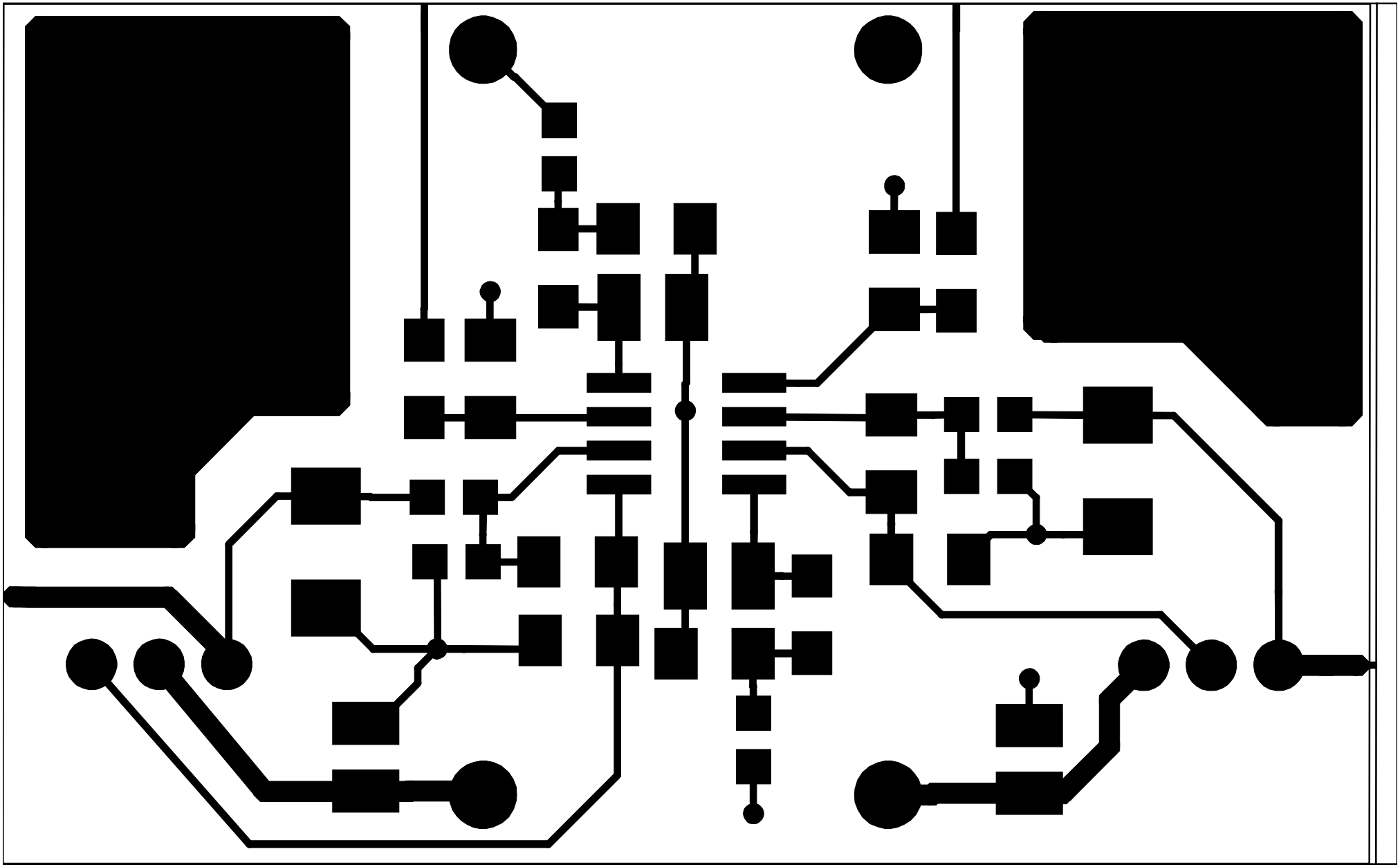

L5
C5
R9
C6
R7
U3
R8
C7
R3
C13
D2
R4
R5
C14
C12
D1
R6
R10
C3
C4
C8
L1
C10
C9
J02