REVISIONS			
REV	DESCRIPTION	DATE	APPROVED

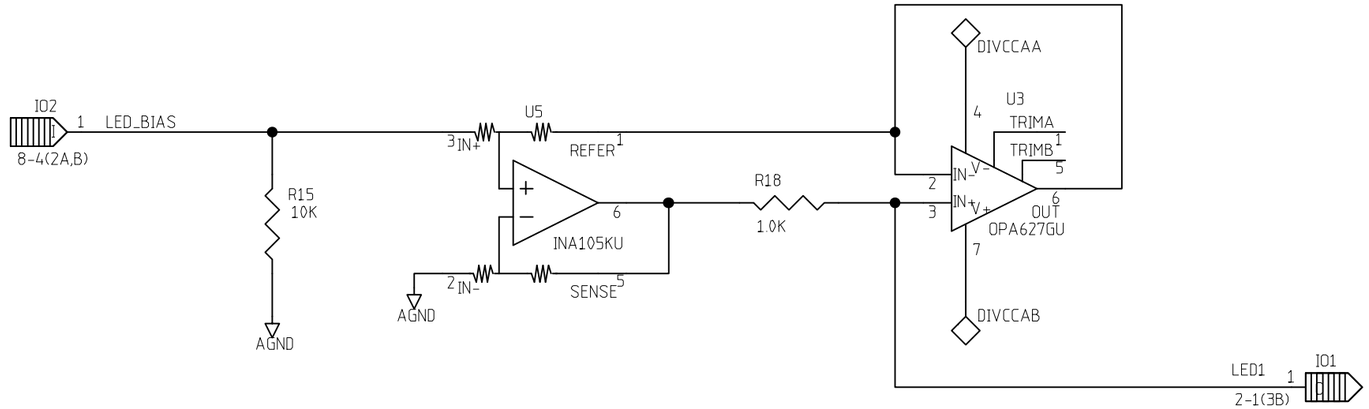

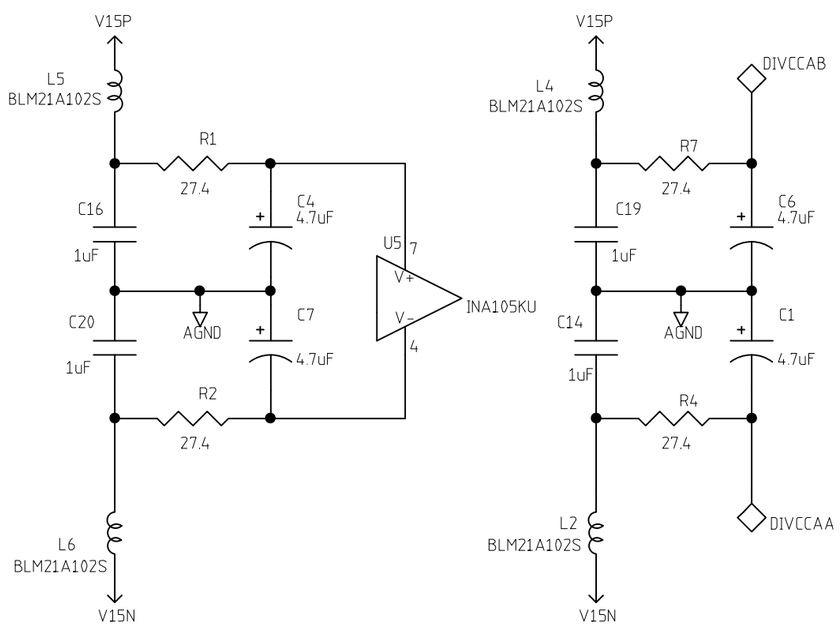

	NAME	DATE
ORIGINATOR	MERLE HALDEMAN	11/16/98
DRAWN	BRUCE MERKEL	12/09/98
CHECKED	TOM CRENNA	1/6/99
APPROVED		

FERMILAB PPD/ ETT/ ES CDMS(E-891)
ZIP MODULE
LED CURRENT SOURCE

SIZE	FSCM NO.	DWG. NO.	REV
B			
SCALE		SHEET 8-5	

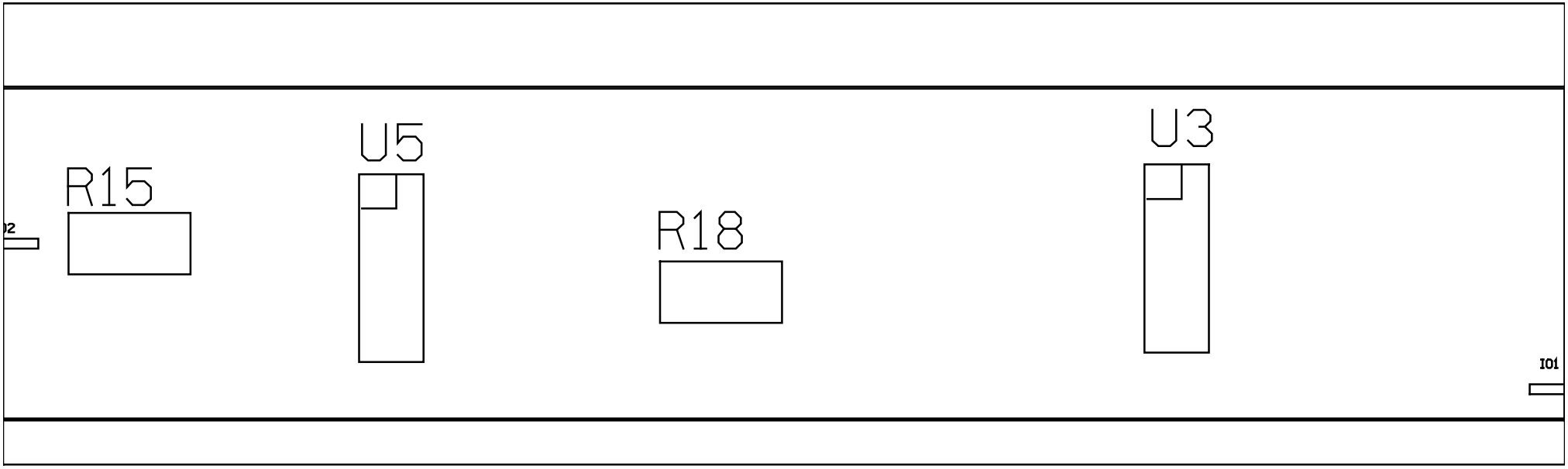
R15
U5
R18
U3
02
101

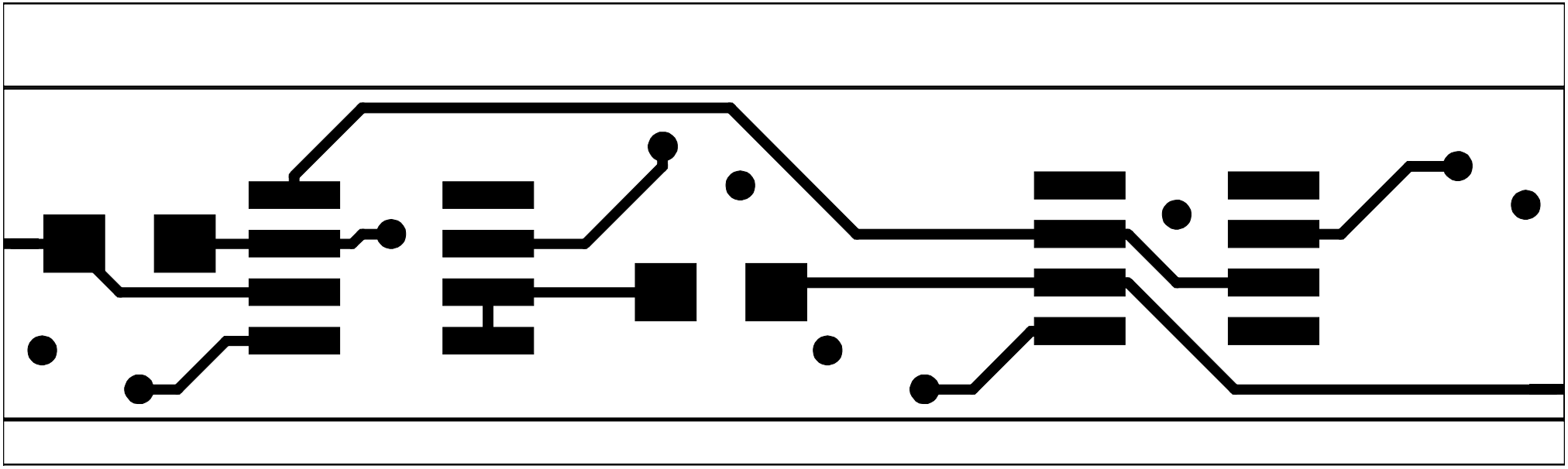

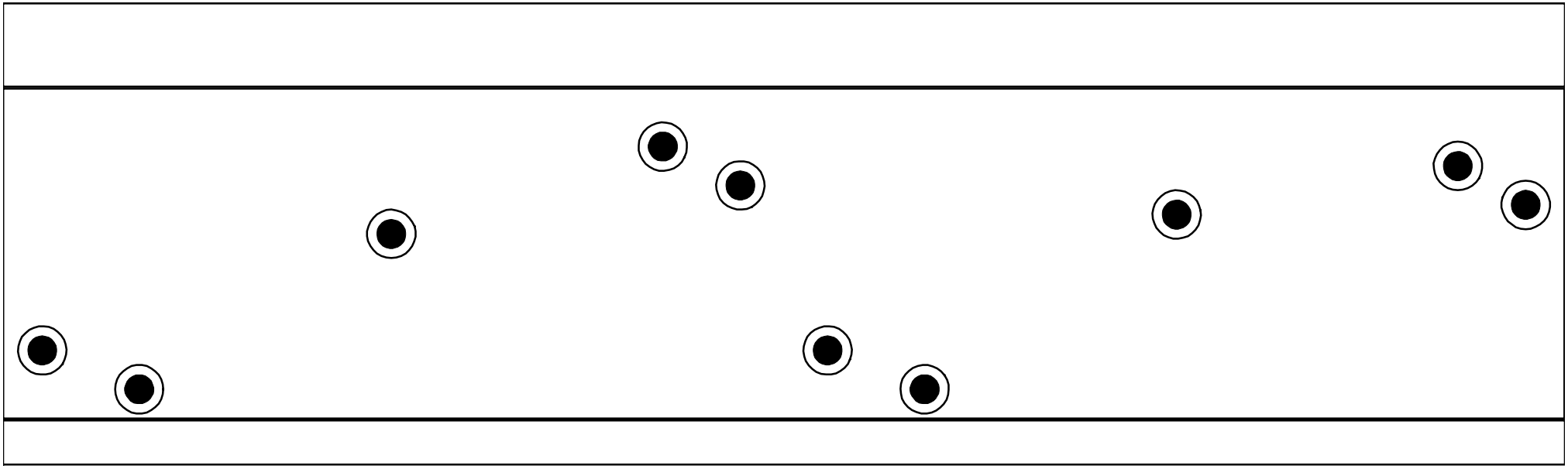

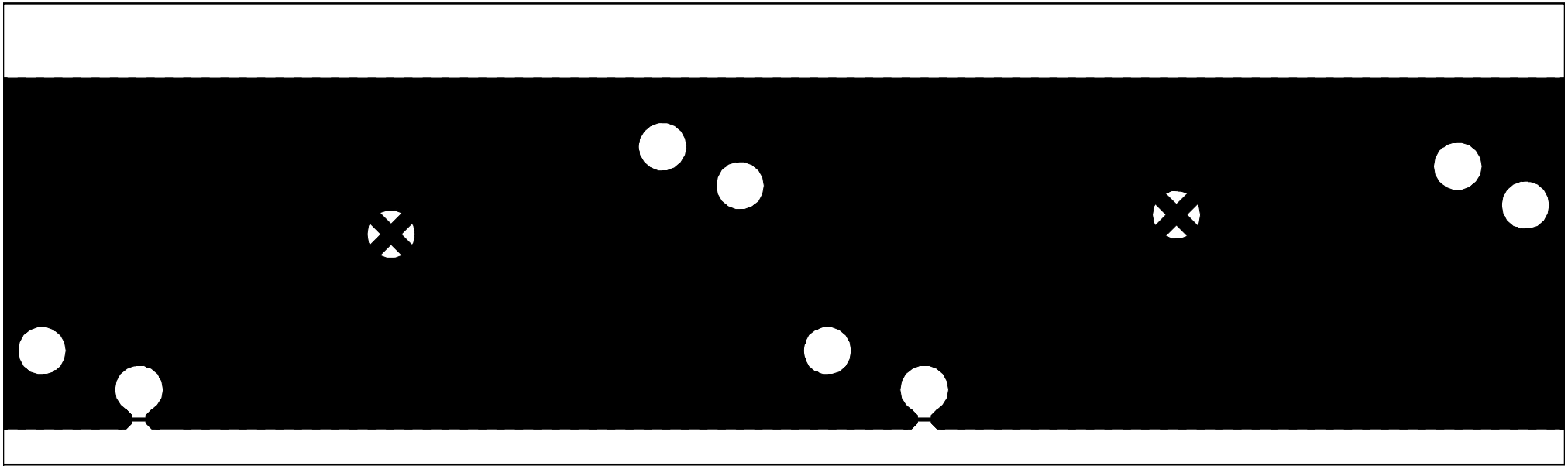

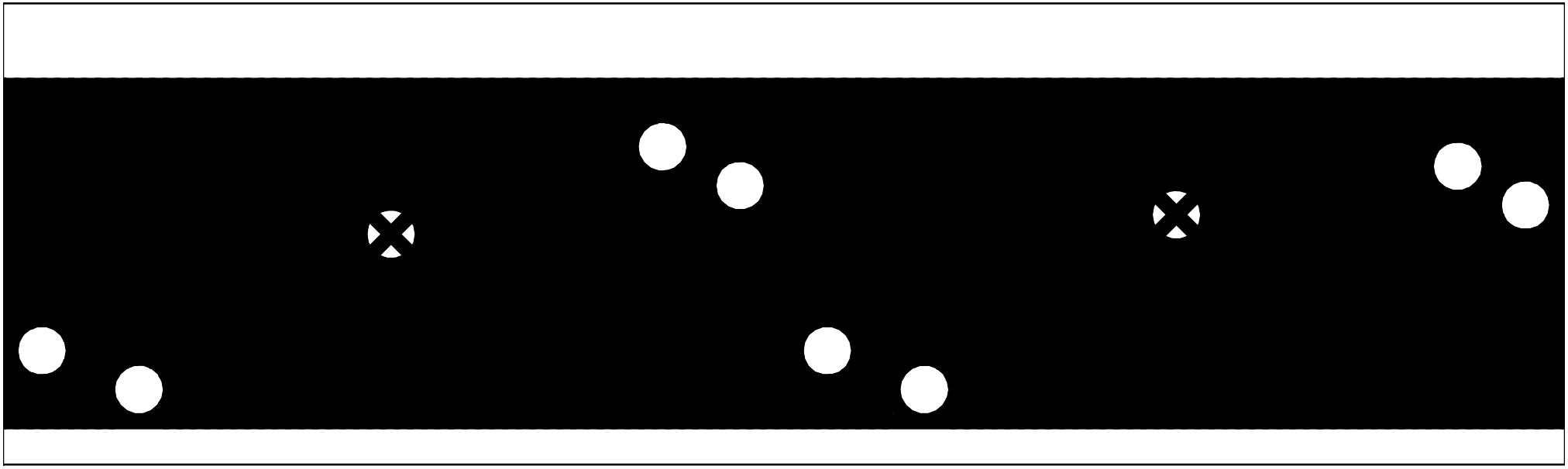

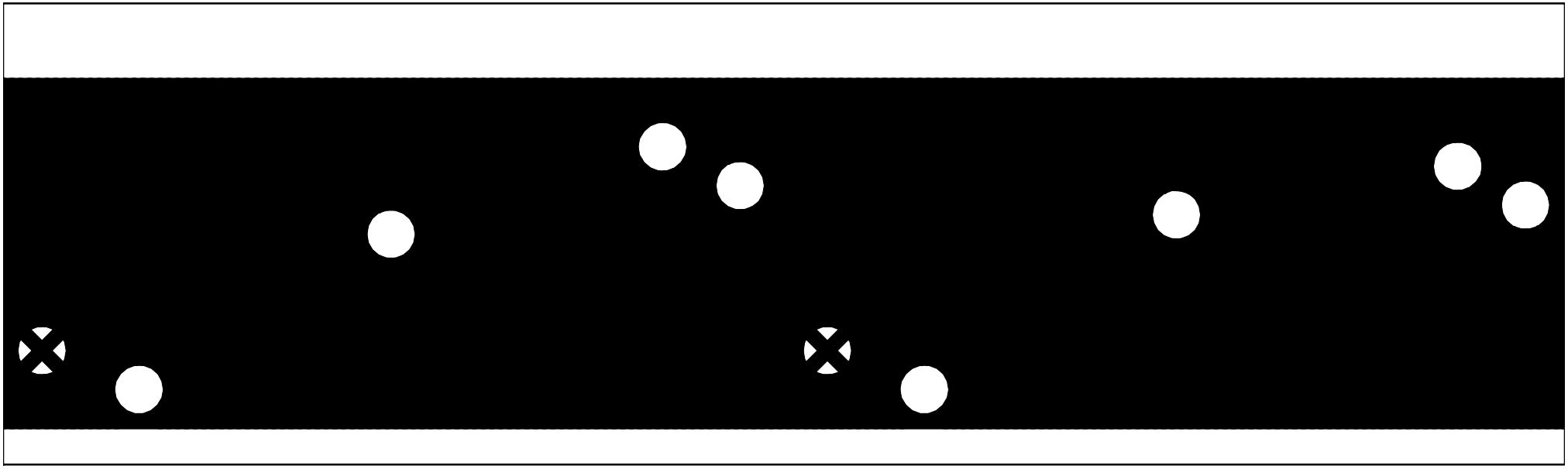

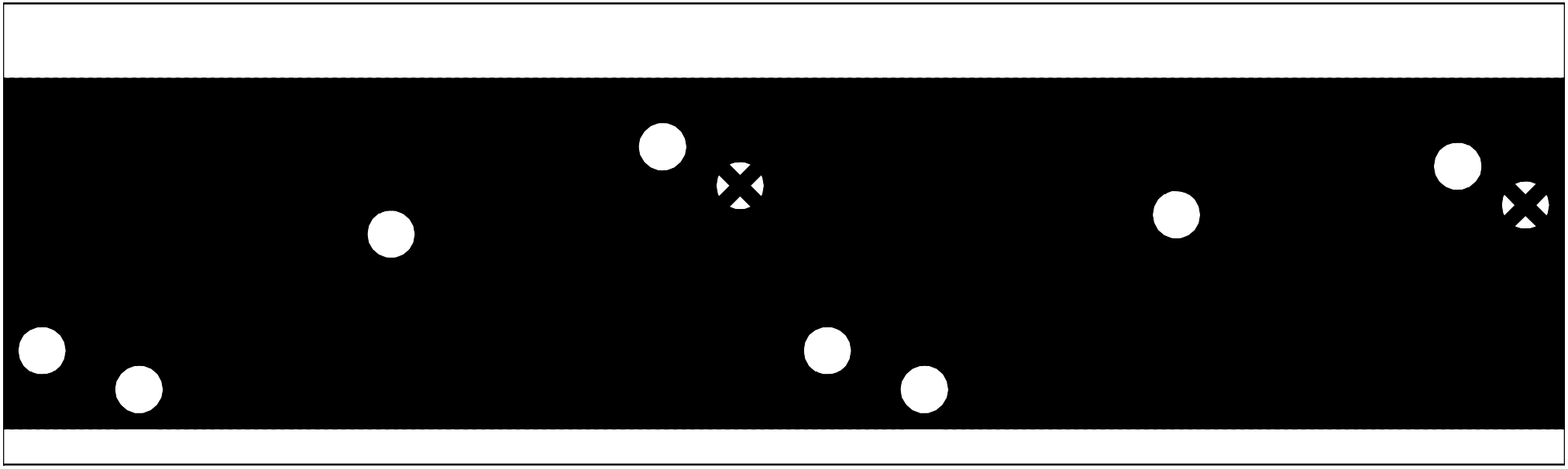

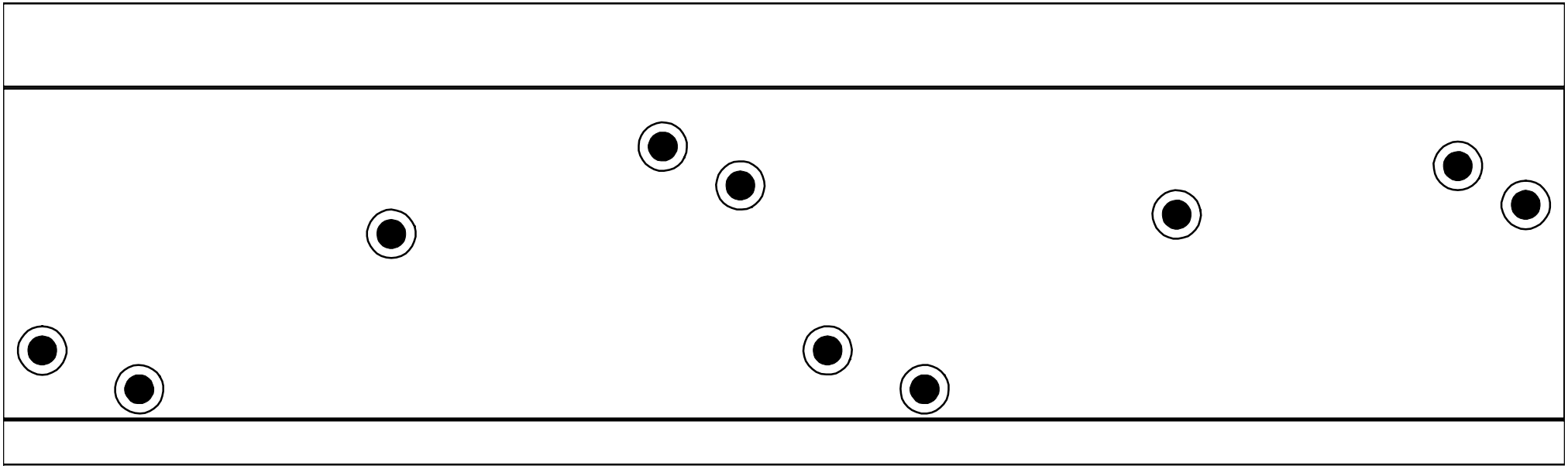

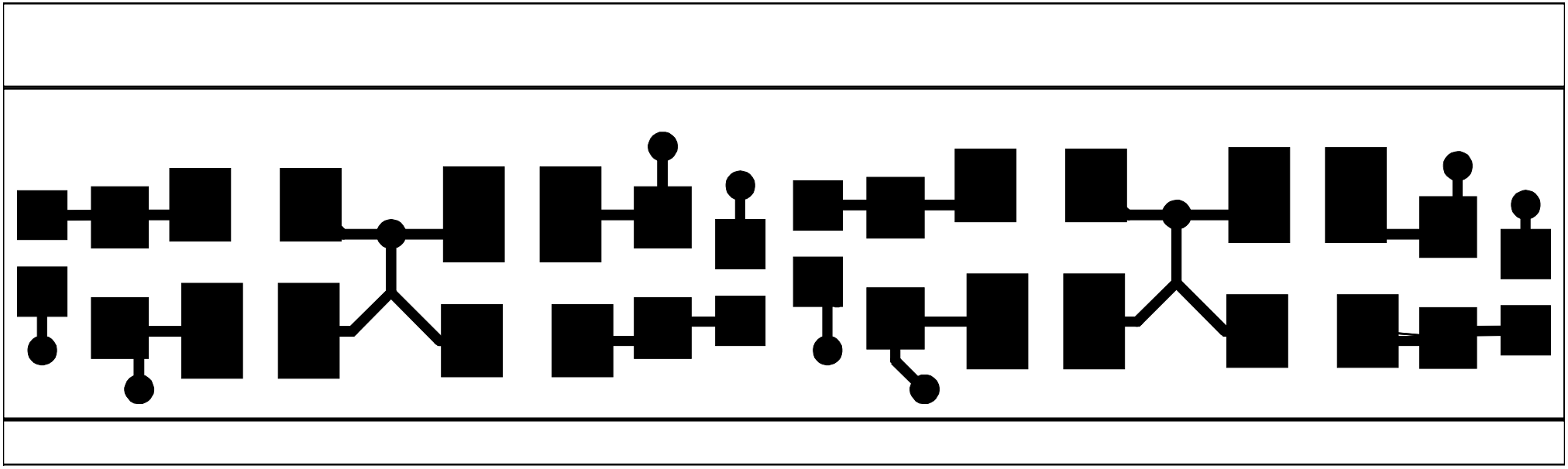

R2
R5
C20
C1
C4
C16
R7
R2
R5
R4
C14
C1
C3
C19
R1
R4