ZIP MODULE INDEX
(1/8/99)

SCHEMATIC SECTION AND PAGE # **(X-X)**	QNTY BRD	SCH. PAGE	DATE CHECKED& MODIFIED	CCKT'S NUMBER	CCKT'S REVIEW	LAST PDF WRT DATE	BOM	LAST REV DATE
LEGEND **(COVER PAGE)**				N/A	N/A	3/25/99		
MISC. CONNECTORS **(1-1)**	1			N/A	N/A	3/25/99		
P2 CONNECTOR BLOCK **(1-2)**	1			N/A	N/A	3/25/99		
P4 CONNECTOR BLOCK **(1-3)**	1			N/A	N/A	3/25/99		
ZIP BLOCK DIAGRAM **(2-1)**	1			N/A	N/A	4/8/99		
SQUID BLOCK DIAGRAM **(3-1)**	4			N/A	N/A	4/2/99		
SQUID FRONT END **(3-2)**	1			CCM005		1/25/99		
SQUID VAR. GAIN AMP **(3-3)**	1			CCM006		1/25/99		
SQUID FEEDBACK CONTROL BLOCK **(3-4)**	4			N/A	N/A	3/25/99		
SQUID FEEDBACK INTEGRATOR **(3-5)**	1			CCM008		1/25/99		
SQUID FEEDBACK POLARITY **(3-6)**	1			CCM009		1/25/99		
SQUID FEEDBACK MONITOR **(3-7)**	1			CCM010		1/25/99		
SQUID FEEDBACK LOGIC **(3-8)**	1			CCM011		4/1/99		
SQUID ZAP CONTROLL **(4-1)**	1			CCM012		4/2/99		
QET BLOCK DIAGRAM **(5-1)**	1			N/A	N/A	3/25/99		
QET FRONT END **(5-2)**	1			CCM015		4/2/99		
QET FILTER **(5-3)**	1			CCM014		1/25/99		
QET DIRECTOR **(5-4)**	1			CCM021		4/1/99		
QAMP BLOCK DIAGRAM **(6-1)**	1			N/A	N/A	3/25/99		
DISCRETE Q AMPLIFIER **(6-2)**	1			CCM001		1/25/99		
QAMP 14V **(6-3)**	1			CCM003		4/1/99		
QBIAS FRONT END **(7-1)**	1			CCM016		4/1/99		
LED BLOCK DIAGRAM **(8-1)**	1			N/A	N/A	3/25/99		
(8-2)				N/A	N/A			
LED PULSE CONTROL **(8-3)**	1			CCM028		4/6/99		
LED CURRENTCONTROL **(8-4)**	1			CCM020		4/6/99		
LED CURRENT SOURCE **(8-5)**	1			CCM019		1/25/99		
FETTEMP **(9-1)**	1			N/A	N/A	4/8/99		
DRIVER **(10-1)**	1			CCM002		4/6/99		
EXTERNAL TEST RECEIVER **(11-1)**	1			CCM022		4/6/99		
DAC&BUFFERS BLOCK DIAGRAM **(12-1)**	1			N/A	N/A	3/25/99		
DAC REFERENCES **(12-2)**	1			N/A	N/A	3/25/99		
DAC PRECISION REFERENCE **(12-3)**	1			CCM023		1/25/99		
DAC 10 VOLT REFERENCE **(12-4)**	1			CCM024		4/2/99		
DAC 5 VOLT REFERENCE **(12-5)**	XXXXX	XXXX	XXXXX	CCM025	XXXX	XXXX	XXX	XXX
DAC'S 1 TO 7 **(12-6)**	7			N/A		4/2/99		
DUAL NON-INVERT BUFFER BLOCK **(12-7)**	1			N/A	N/A	4/6/99		
DUAL NON-INVERT. BUFFERS **(12-8)**	1			CCM007		4/6/99		
BUFFER FILTER **(12-9)**	1			CCM017		1/25/99		
LOGIC BLOCK DIAGRAM **(13-1)**	1			N/A	N/A	3/25/99		
(13-2)				N/A	N/A			
CONTROL LOGIC **(13-3)**	1			N/A	N/A	3/25/99		
CSR LOGIC **(13-4)**	1			N/A	N/A	3/25/99		
POLARITY CONTROL BLOCK**(13-5)**	1			N/A		3/25/99		
POLARITY CONTROL **(13-6)**	1			CCM018		4/8/99		
(13-7)				N/A				
POWER CONTROL BLOCK DIAGRAM**(14-1)**	1			N/A	N/A	4/2/99		
5 VOLT SECTION **(14-2)**	1			CCM026		4/2/99		
15 VOLT SECTION **(14-3_)**	1			CCM027		4/8/99		
Q AMP REFERENCE **(14-4)**	1			CCM004		1/25/99		

50 Pin D Connector
Detector I/O
Slots 1 thru 9, and
12 thru 20
[Crate Front View]
P/J1

Pin #		Pin #		Pin #	
50	Qi Feedback			17	FEGND
		33	FEGND		
49	FET Temp+			16	Qi Drain
		32	FEGND		
48	FEGND			15	Qi Bias
		31	Qi Source		
47	FEGND			14	FEGND
		30	Qo Feedback		
46	FET Heater-			13	FEGND
		29	FEGND		
45	FET Heater +			12	Qo Drain
		28	FEGND		
44	FEGND			11	Qo Bias
		27	Qo Source		
43	FEGND			10	FEGND
		26	LED 2		
42	LED 1			9	FEGND
		25	FEGND		
41	FBout C			8	SQUID Bias C
		24	FEGND		
40	FEGND			7	QET Bias C
		23	SQUID Bias D		
39	FEGND			6	FEGND
		22	FBoutD		
38	QET Bias D			5	FEGND
		21	FEGND		
37	FBout A			4	SQUID Bias A
		20	FEGND		
36	FEGND			3	QET Bias A
		19	SQUID Bias B		
35	QET Bias B			2	FBout B
		18	FEGND		
34	FEGND			1	FEGND

The backplane connector is
part # AMP 205211-2

The mating connector on the
module is part # AMP 745355-4

48 Pin DIN Connector
Crate Power
Slots 1 thru 21
[Crate Front View]
P/J2

Pin #	Row A	Row B	Row C
1	FEGND	Aux Heater Power+	FEGND
2	FEGND	Aux Heater Power-	FEGND
3	FE +15	FE +15	FE +15
4	FEGND	FEGND	FEGND
5	FE -15	FE -15	FE -15
6	FEGND	FEGND	FEGND
7	FEGND	FEGND	FEGND
8	AGND	AGND	AGND
9	A15+	A15+	A15+
10	AGND	AGND	AGND
11	A15-	A15-	A15-
12	AGND	AGND	AGND
13	10Hz+	AGND	PULSER+
14	10Hz-	AGND	PULSER-
15	1kHz+	**Spare**	Trig+
16	1kHz-	**Spare**	Trig-

NOTES;

1 Revision 10/23/97 changed 48 pin contacts C13,C14,C15 and C16
2 Revised view of 50 Pin and 25 Pin connectors to show
proper 0rientation on 4/7/99
3 10 Layer Backplane

The backplane connector is
part # AMP 535034-4

The mating connector on the
module is part # AMP 650948-5

25 Pin D Connector
Detector Output
Slots 1 thru 9, and
12 thru 20
[Crate Front View]
P/J3

Pin #			Pin #
			13
25			
			12
24			
			11
23			
			10
22	AGND		
		FET T SENSE	9
21	AGND		
		LED Vmon	8
20	AGND		
		LED Imon	7
19	AGND		
		SQUID D	6
18	AGND		
		SQUID C	5
17	AGND		
		SQUID B	4
16	AGND		
		SQUID A	3
15	AGND		
		Qo Out	2
14	AGND		
		Qi Out	1

The backplane connector is
part # AMP 207463-1

Slots 1 thru 20
Detector n
(n = 1 through 18)
[Crate Front View]
P/J4

Pin #	Row A	Row B	Row C
1	5 Volts	5 Volts	5 Volts
2	5 Volts	5 Volts	5 Volts
3	5 Volts	5 Volts	5 Volts
4	5 Volts	5 Volts	5 Volts
5	DGND	DGND	DGND
6	D0	DGND	D8
7	D1	DGND	D9
8	D2	DGND	D10
9	D3	DGND	D11
10	D4	DGND	D12
11	D5	DGND	D13
12	D6	DGND	D14
13	D7	DGND	D15
14	DGND	DGND	DGND
15	A 0	DGND	A 8
16	A 1	DGND	A 9
17	A 2	DGND	A 10
18	A 3	DGND	A 11
19	A 4	DGND	A 12
20	A 5	DGND	A 13
21	A 6	DGND	A 14
22	A 7	DGND	A 15
23	DGND	DGND	DGND
24	Read	DGND	Write
25	DGND	DGND	DGND
26	5 Volts	5 Volts	5 Volts
27	5 Volts	5 Volts	5 Volts
28	5 Volts	5 Volts	5 Volts
29	Local Address A4	Local Address A3	5 Volts
30	Local Address A2	Local Address A1	Local Address A0
31	DGND	DGND	DGND
32	Bussed Spare 1	Bussed Spare 2	Sync out

The backplane connector is
part # AMP 535032-4

The mating connector on the
module is part # AMP 650947-5

Slot 21
GPIB Controller
[Crate Front View]
P/J4

Row A	Row B	Row C
spare	5 Volts	Trig1-
spare	5 Volts	Trig1+
5 Volts	5 Volts	spare
5 Volts	5 Volts	spare
DGND	DGND	DGND
D0	DGND	D8
D1	DGND	D9
D2	DGND	D10
D3	DGND	D11
D4	DGND	D12
D5	DGND	D13
D6	DGND	D14
D7	DGND	D15
DGND	DGND	DGND
A 0	DGND	A 8
A 1	DGND	A 9
A 2	DGND	A 10
A 3	DGND	A 11
A 4	DGND	A 12
A 5	DGND	A 13
A 6	DGND	A 14
A 7	DGND	A 15
DGND	DGND	DGND
Read	DGND	Write
DGND	DGND	DGND
5 Volts	5 Volts	5 Volts
5 Volts	5 Volts	5 Volts
5 Volts	5 Volts	5 Volts
5 Volts	5 Volts	5 Volts
5 Volts	5 Volts	5 Volts
DGND	DGND	DGND
Bussed Spare 1	Bussed Spare 2	Sync out

SYMBOL LEDGEND

AGND — ANALOG GROUND PLANE

FEGND — FRONT END GROUND PLANE

GND — DIGITAL GROUND PLANE

V15P V15PFE +10R +5REF +5QD +5Q VCC

CONNECTIONS TO POWER PLANES

V15N V15NFE -10R -5REF -5QD -5Q

INTRA PAGE CONNECTION

EXTERNAL PAGE CONNECTION OUTPUT

EXTERNAL PAGE CONNECTION INPUT

BACKPLANE CONNECTOR PIN

BLOCK — INPUT PIN — OUTPUT PIN

SYMBOL

UNCONNECTED TERMINATION

PAGE CONNECTOR DESIGNATIONS:

ANALOG CONTROL INPUT — ANALOG CONTROL OUTPUT

ANALOG SIGNAL INPUT — ANALOG SIGNAL OUTPUT

3-3(2C)

SECTION PAGE COORDINATES

REVISIONS

REV	DESCRIPTION	DATE	APPROVED

	NAME	DATE
ORIGINATOR	MERLE HALDEMAN	12/21/98
DRAWN	BRUCE MERKEL	12/21/98
CHECKED	TOM CRENNA	12/21/98
APPROVED		

FERMILAB PPD/ETT/ES CDMS (E-891)
ZIP MODULE DRAWING
SYMBOL LEGEND

SIZE	FSCM NO.	DWG. NO.	REV
A			

SCALE | SHEET COVER PAGE

REVISIONS			
REV	DESCRIPTION	DATE	APPROVED

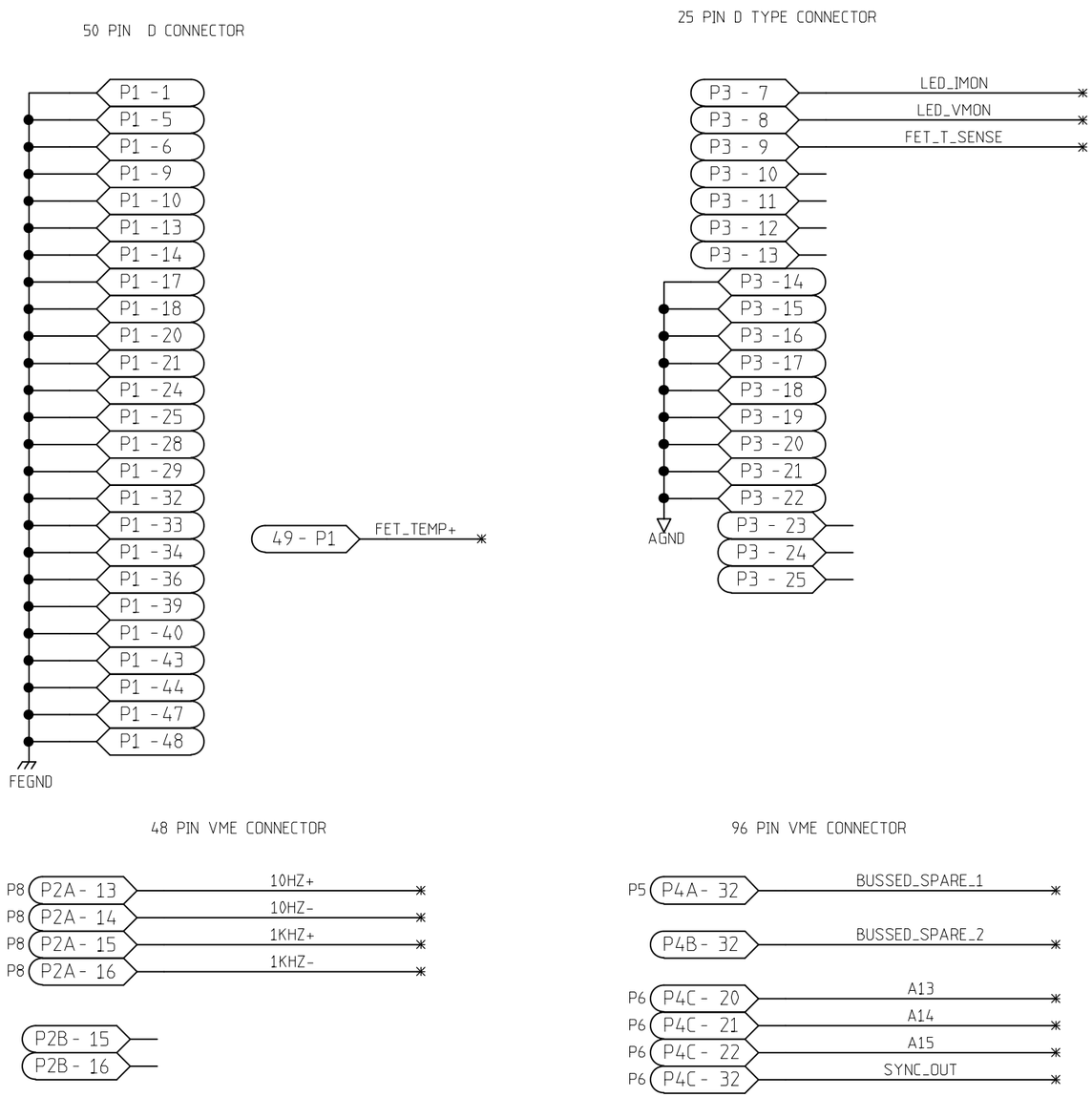

LEGENDS

	NAME	DATE
ORIGINATOR	MERLE HALDEMAN	11/18/98
DRAWN	BRUCE MERKEL	11/18/98
CHECKED	TOM CRENNA	12/9/98
APPROVED		

FERMILAB PPD/ETT/ES CDMS (E-891)
ZIP MODULE
MISC. CONNECTORS

SIZE	FSCM NO.	DWG. NO.	REV
B			
SCALE		SHEET 1-1	

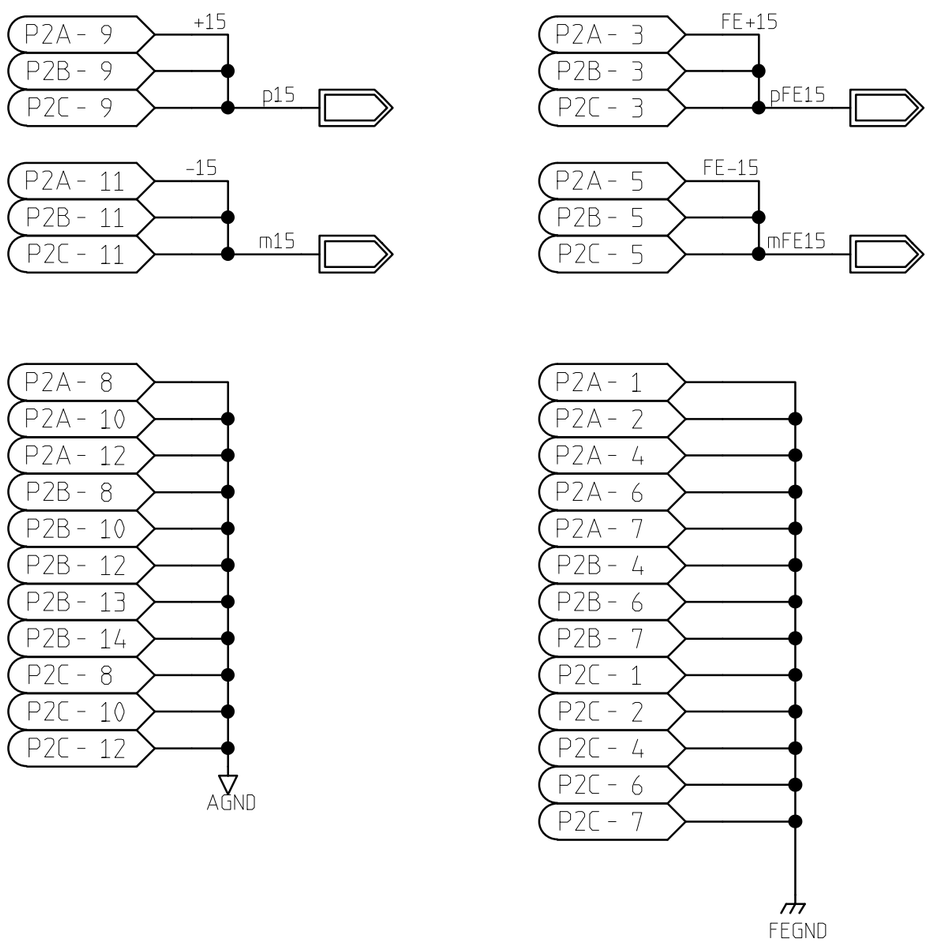

REVISIONS			
REV	DESCRIPTION	DATE	APPROVED

	NAME	DATE
ORIGINATOR	MERLE HALDEMAN	10/8/98
DRAWN	BRUCE MERKEL	10/8/98
CHECKED	TOM CRENNA	1/8/99
APPROVED		

FERMILAB PPD/ETT/ES CDMS (E-891)
ZIP MODULE
P2 BACKPLANE POWER CONNECTION

SIZE	FSCM NO.	DWG. NO.	REV
A			

SCALE		SHEET 1-2

P4
(96 PIN CONNECTOR)

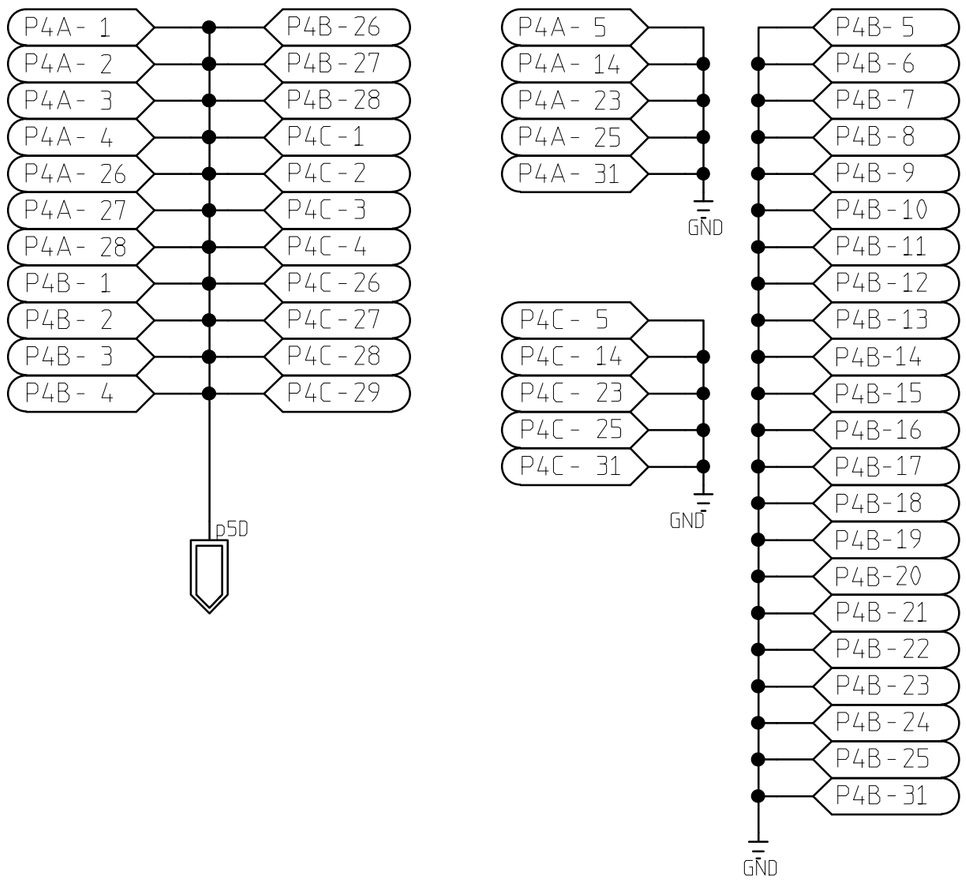

REVISIONS

REV	DESCRIPTION	DATE	APPROVED

	NAME	DATE
ORIGINATOR	MERLE HALDEMAN	10/8/98
DRAWN	BRUCE MERKEL	10/8/98
CHECKED	TOM CRENNA	1/8/99
APPROVED		

FERMILAB PPD/ETT/ES CDMS (E-891)
ZIP MODULE
P4 BACKPLANE POWER CONNECTION

SIZE	FSCM NO.	DWG. NO.	REV
A			

SCALE | SHEET 1-3

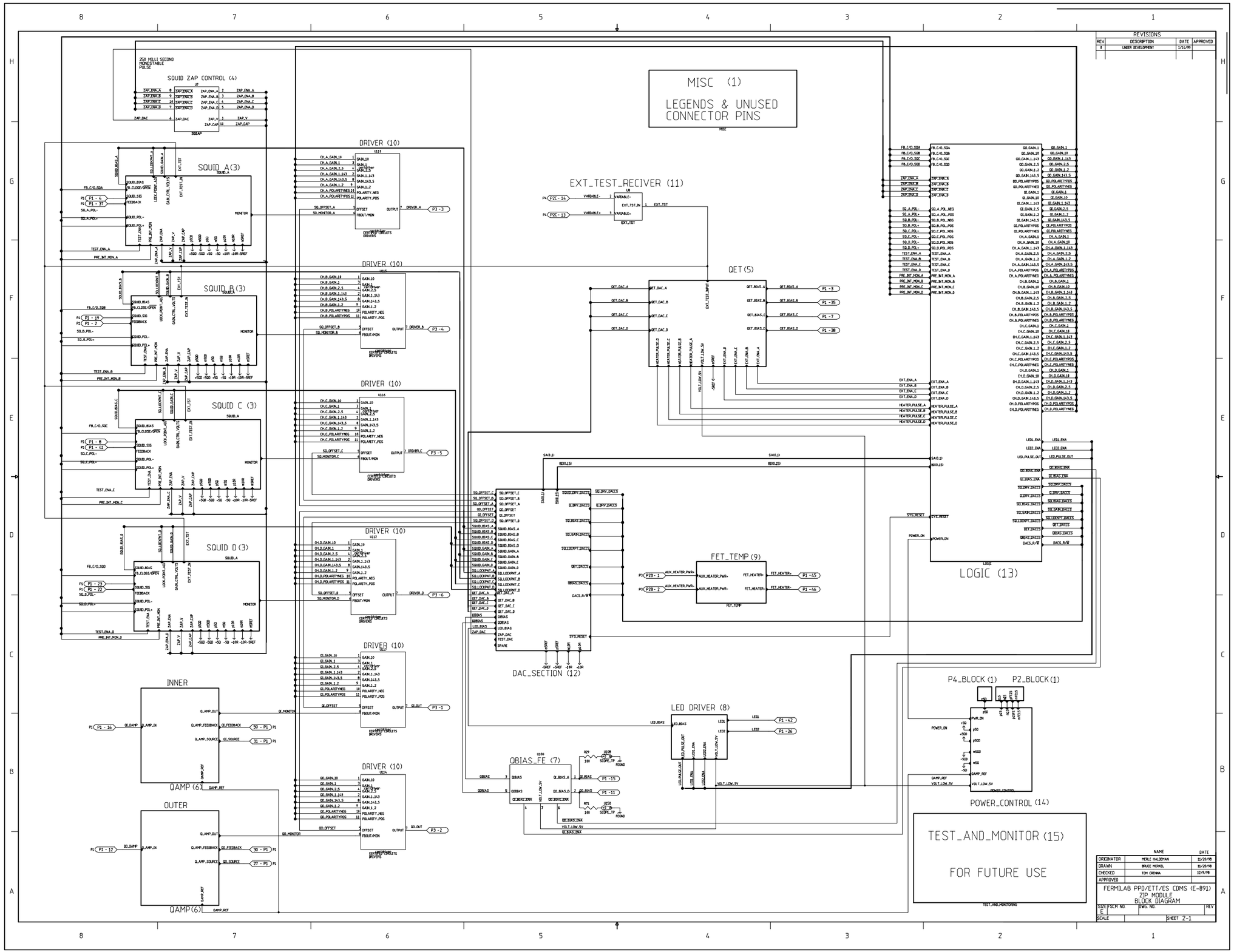

REVISIONS			
REV	DESCRIPTION	DATE	APPROVED
1	UNDER DEVELOPMENT	1/21/99	

	NAME	DATE
ORIGINATOR	MERLE HALDEMAN	11/25/98
DRAWN	BRUCE MERKEL	11/25/98
CHECKED	TOM CRENNA	12/9/98
APPROVED		

FERMILAB PPD/ETT/ES CDMS (E-891)
ZIP MODULE
BLOCK DIAGRAM

SIZE/FSCM NO.	DWG. NO.	REV
E		
SCALE	SHEET 2-1	

REVISIONS			
REV	DESCRIPTION	DATE	APPROVED

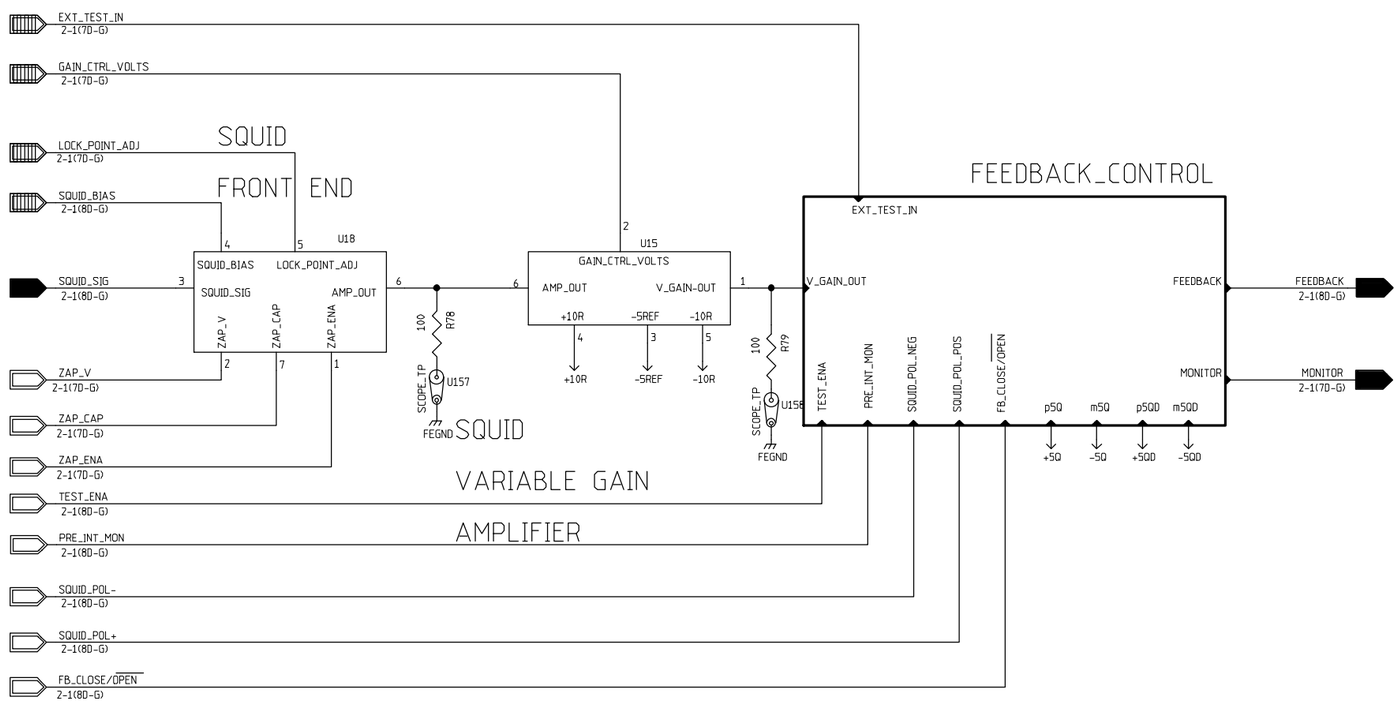

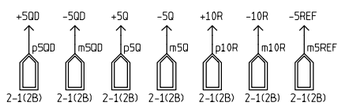

	NAME	DATE
ORIGINATOR	MERLE HALDEMAN	11/17/98
DRAWN	BRUCE MERKEL	11/17/98
CHECKED	TOM CRENNA	1/6/99
APPROVED		

FERMILAB PPD/ETT/ES CDMS (E-891)
ZIP MODULE
SQUID BLOCK DIAGRAM

SIZE	FSCM NO.	DWG. NO.	REV
C			
SCALE		SHEET 3-1	

REVISIONS			
REV	DESCRIPTION	DATE	APPROVED

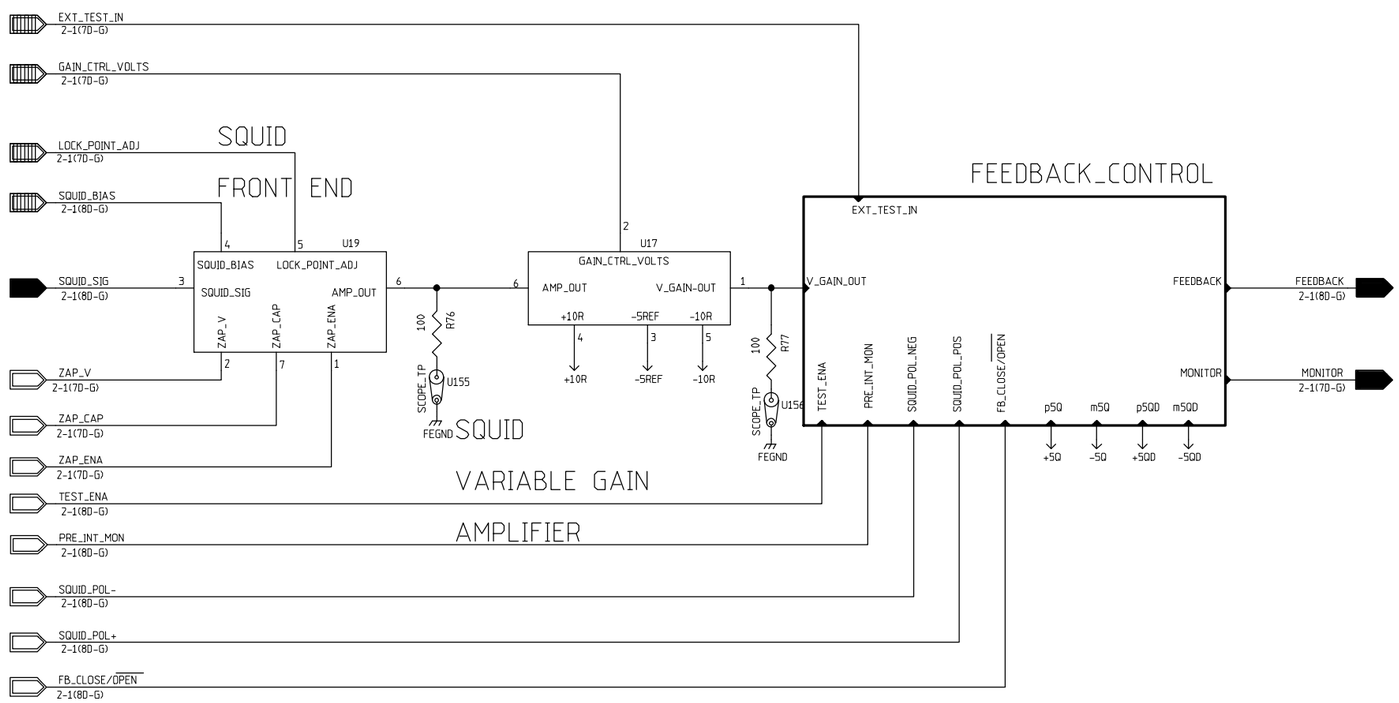

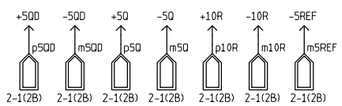

	NAME	DATE
ORIGINATOR	MERLE HALDEMAN	11/17/98
DRAWN	BRUCE MERKEL	11/17/98
CHECKED	TOM CRENNA	1/6/99
APPROVED		

FERMILAB PPD/ETT/ES CDMS (E-891)
ZIP MODULE
SQUID BLOCK DIAGRAM

SIZE	FSCM NO.	DWG. NO.	REV
C			
SCALE		SHEET 3-1	

REVISIONS			
REV	DESCRIPTION	DATE	APPROVED

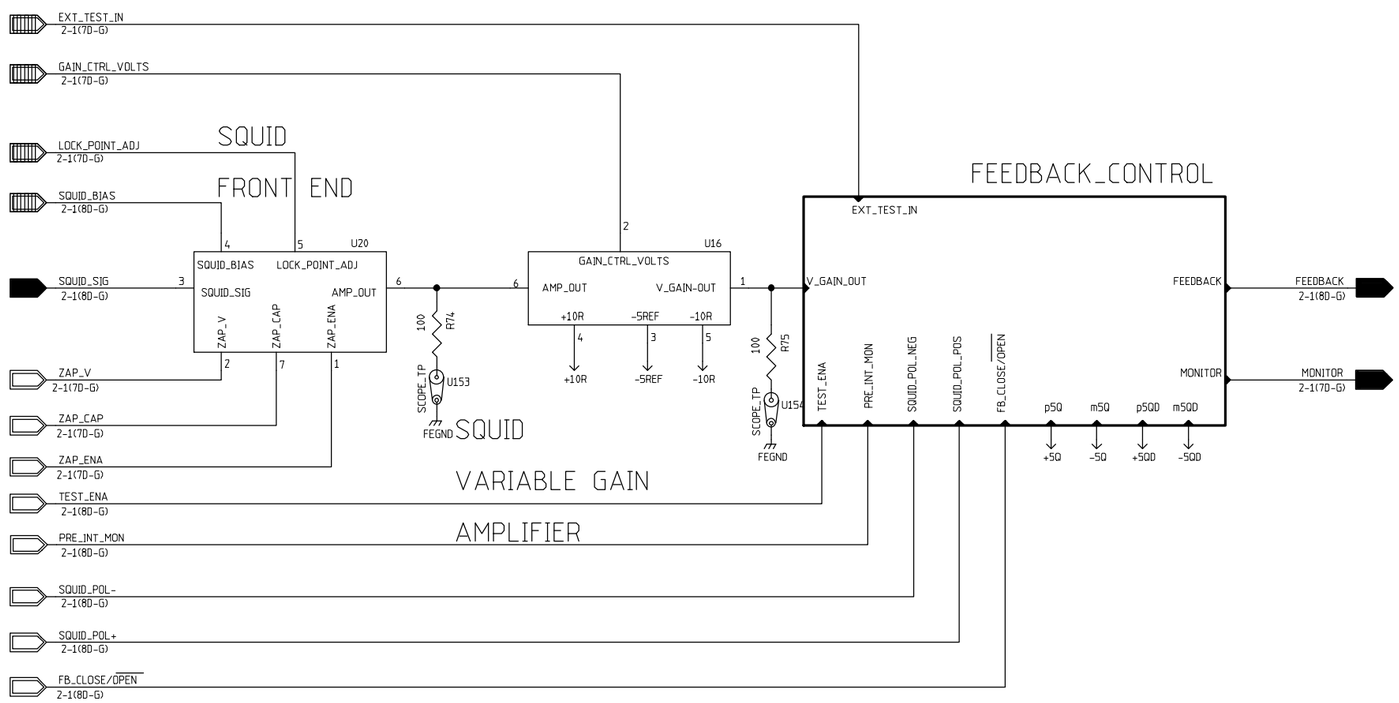

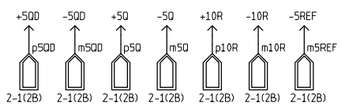

	NAME	DATE
ORIGINATOR	MERLE HALDEMAN	11/17/98
DRAWN	BRUCE MERKEL	11/17/98
CHECKED	TOM CRENNA	1/6/99
APPROVED		

FERMILAB PPD/ETT/ES CDMS (E-891)
ZIP MODULE
SQUID BLOCK DIAGRAM

SIZE	FSCM NO.	DWG. NO.	REV
C			
SCALE		SHEET 3-1	

REVISIONS			
REV	DESCRIPTION	DATE	APPROVED

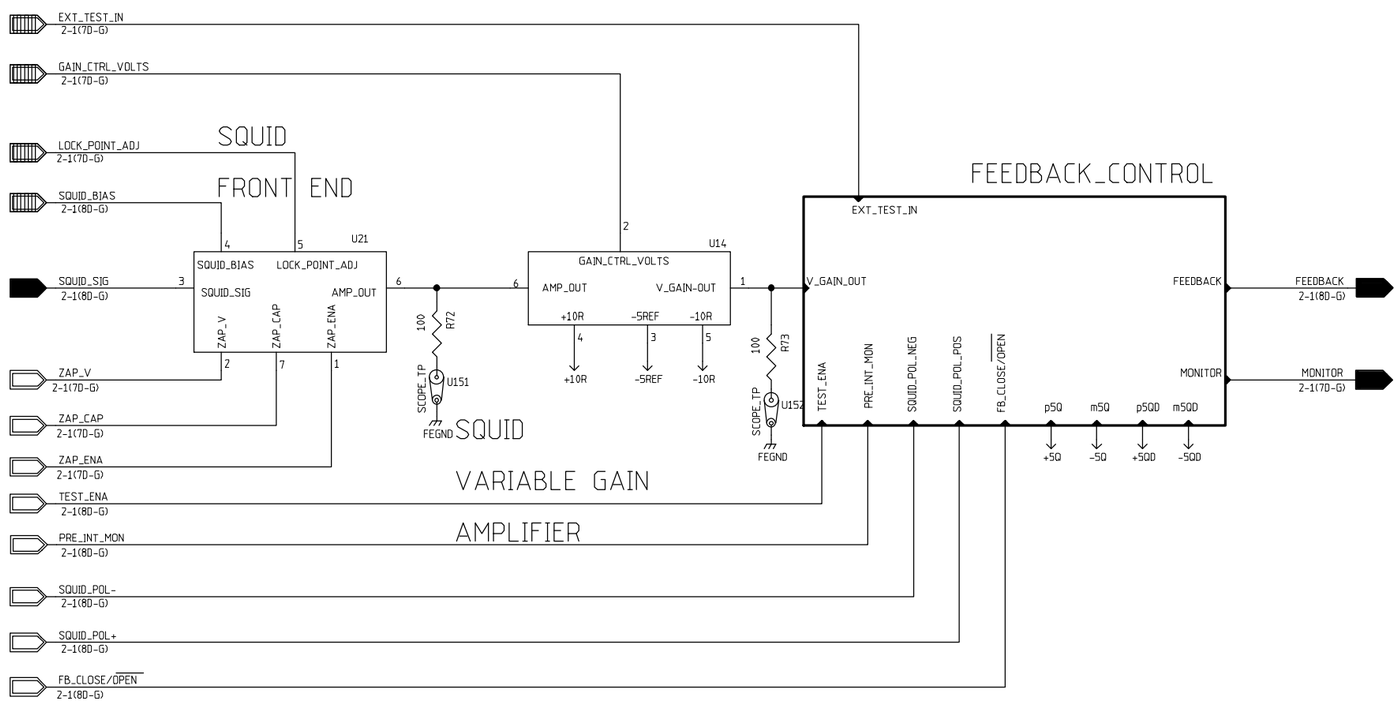

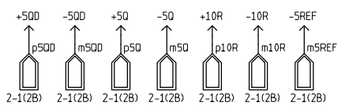

	NAME	DATE
ORIGINATOR	MERLE HALDEMAN	11/17/98
DRAWN	BRUCE MERKEL	11/17/98
CHECKED	TOM CRENNA	1/6/99
APPROVED		

FERMILAB PPD/ETT/ES CDMS (E-891)
ZIP MODULE
SQUID BLOCK DIAGRAM

SIZE	FSCM NO.	DWG. NO.	REV
C			
SCALE		SHEET 3-1	

REVISIONS			
REV	DESCRIPTION	DATE	APPROVED

RELAY SHOWN IN
DEENERGIZED STATE

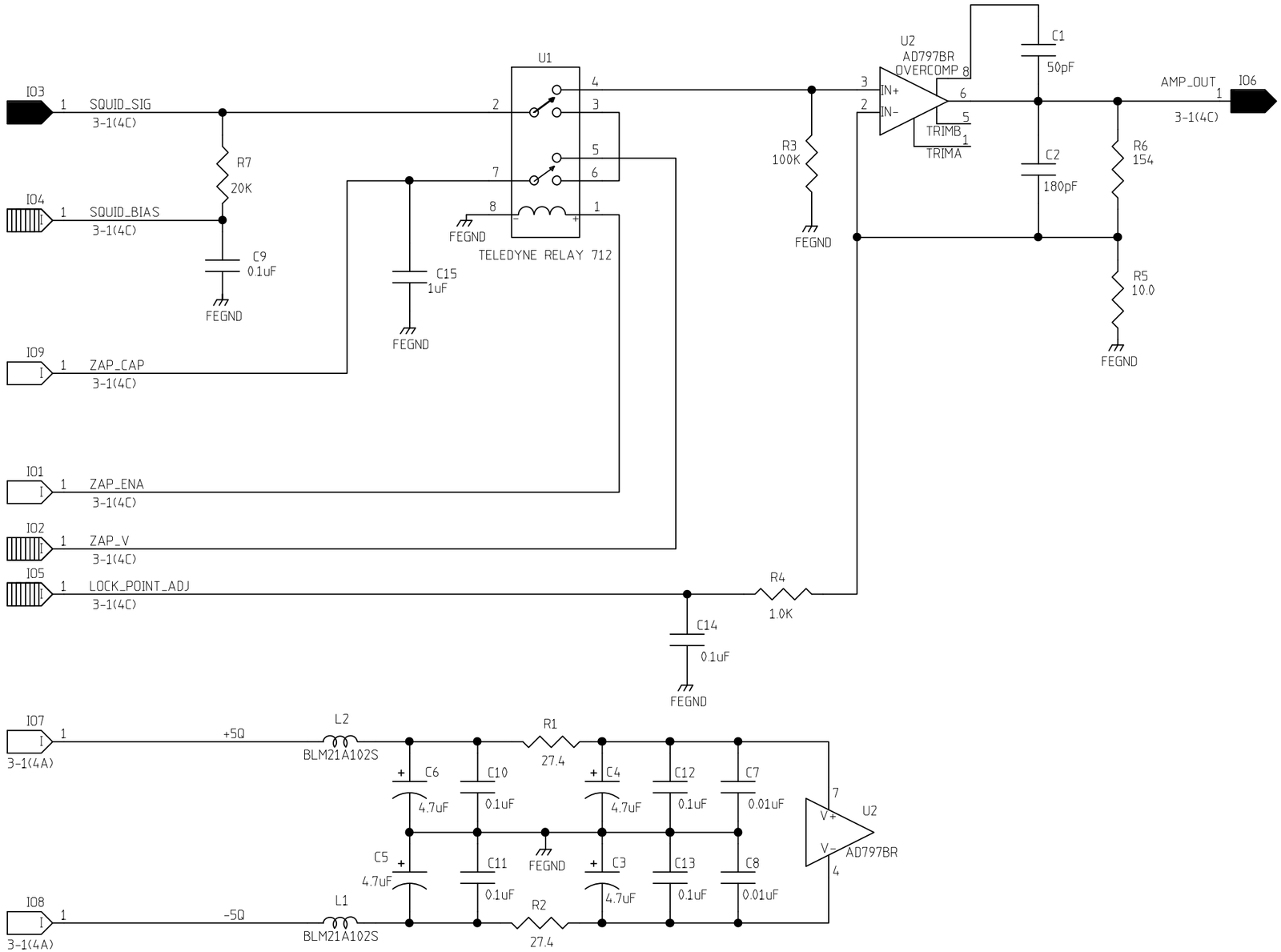

	NAME	DATE
ORIGINATOR	MERLE HALDEMAN	11/11/98
DRAWN	BRUCE MERKEL	11/11/98
CHECKED	TOM CRENNA	1/6/99
APPROVED		

FERMILAB PPD/ETT/ES CDMS (E-891)
ZIP MODULE
SQUID FRONT END

SIZE	FSCM NO.	DWG. NO.	REV
B			
SCALE		SHEET 3-2	

REVISIONS			
REV	DESCRIPTION	DATE	APPROVED

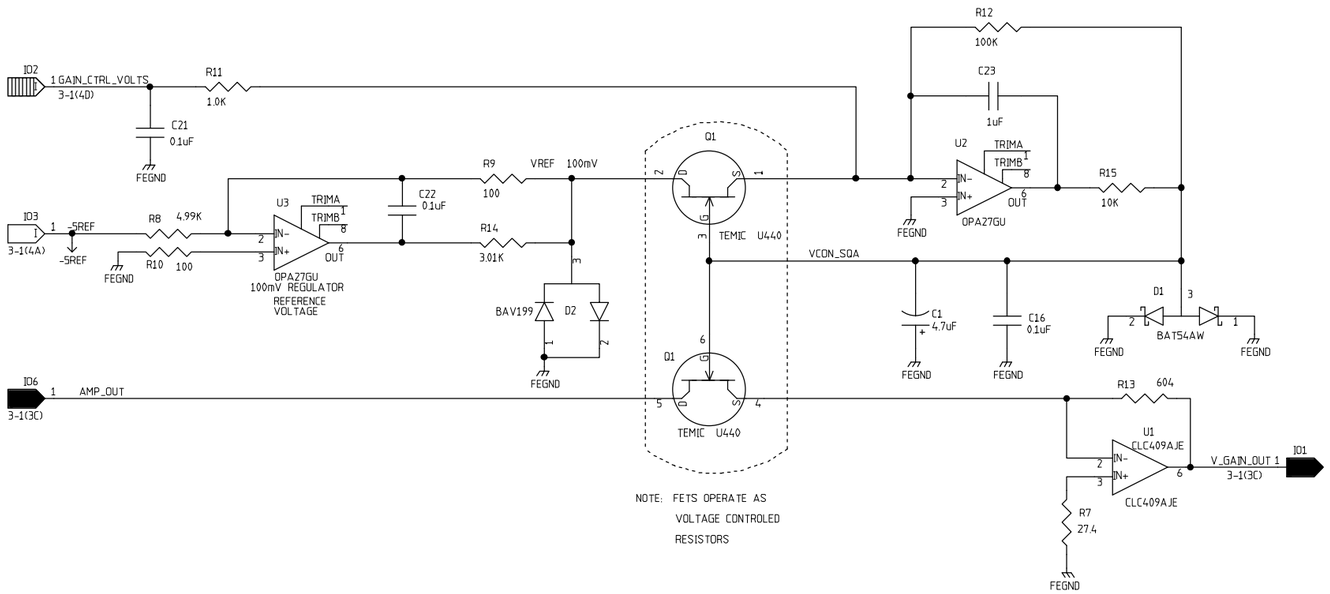

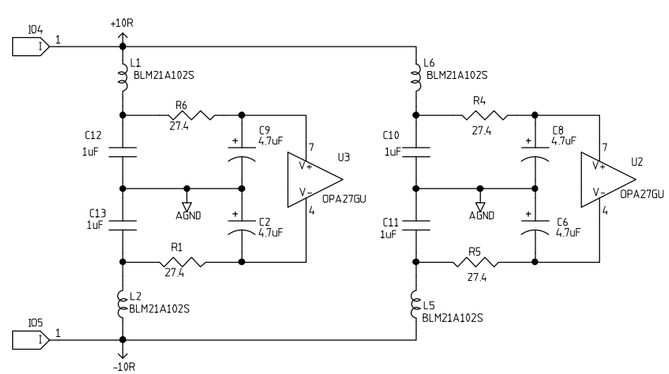

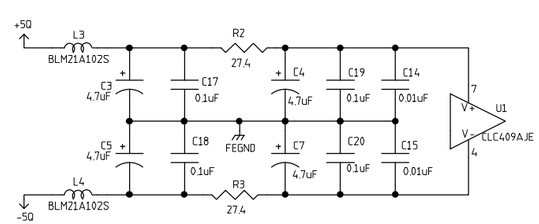

	NAME	DATE
ORIGINATOR	MERLE HALDEMAN	11/13/98
DRAWN	BRUCE MERKEL	11/13/98
CHECKED	TOM CRENNA	1/6/99
APPROVED		

FERMILAB PPD/ETT/ES CDMS (E-891)
ZIP MODULE
SQUID VARIABLE GAIN AMP

SIZE	FSCM NO.	DWG. NO.	REV
C			
SCALE		SHEET 3-3	

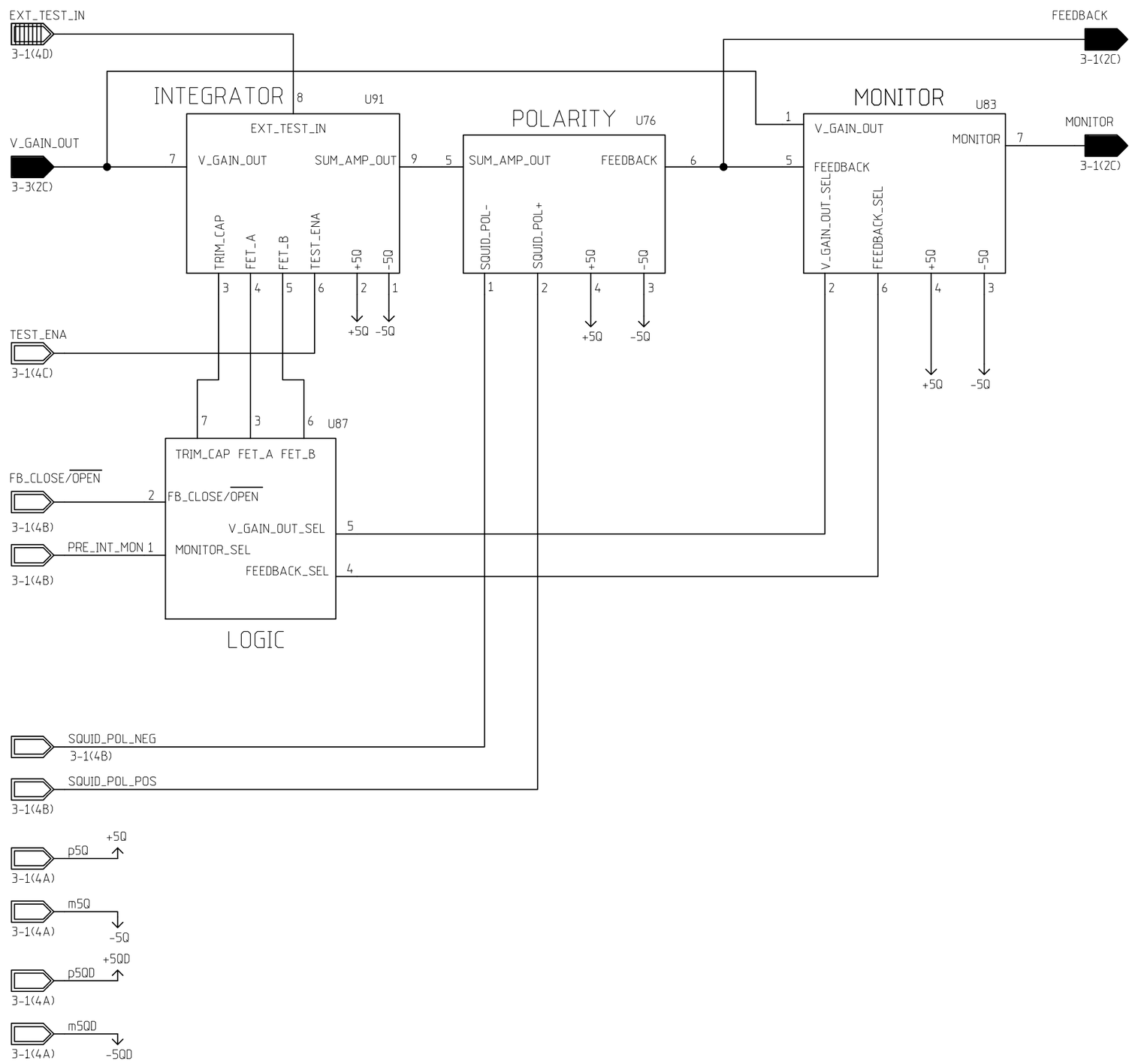

REVISIONS

REV	DESCRIPTION	DATE	APPROVED

	NAME	DATE
ORIGINATOR	MERLE HALDEMAN	11/13/98
DRAWN	BRUCE MERKEL	11/13/98
CHECKED	TOM CRENNA	1/6/99
APPROVED		

FERMILAB PPD/ETT/ES CDMS (E-891)
ZIP MODULE
SQUID FEEDBACK CONTROL

SIZE	FSCM NO.	DWG. NO.	REV
B			

SCALE | SHEET 3-4

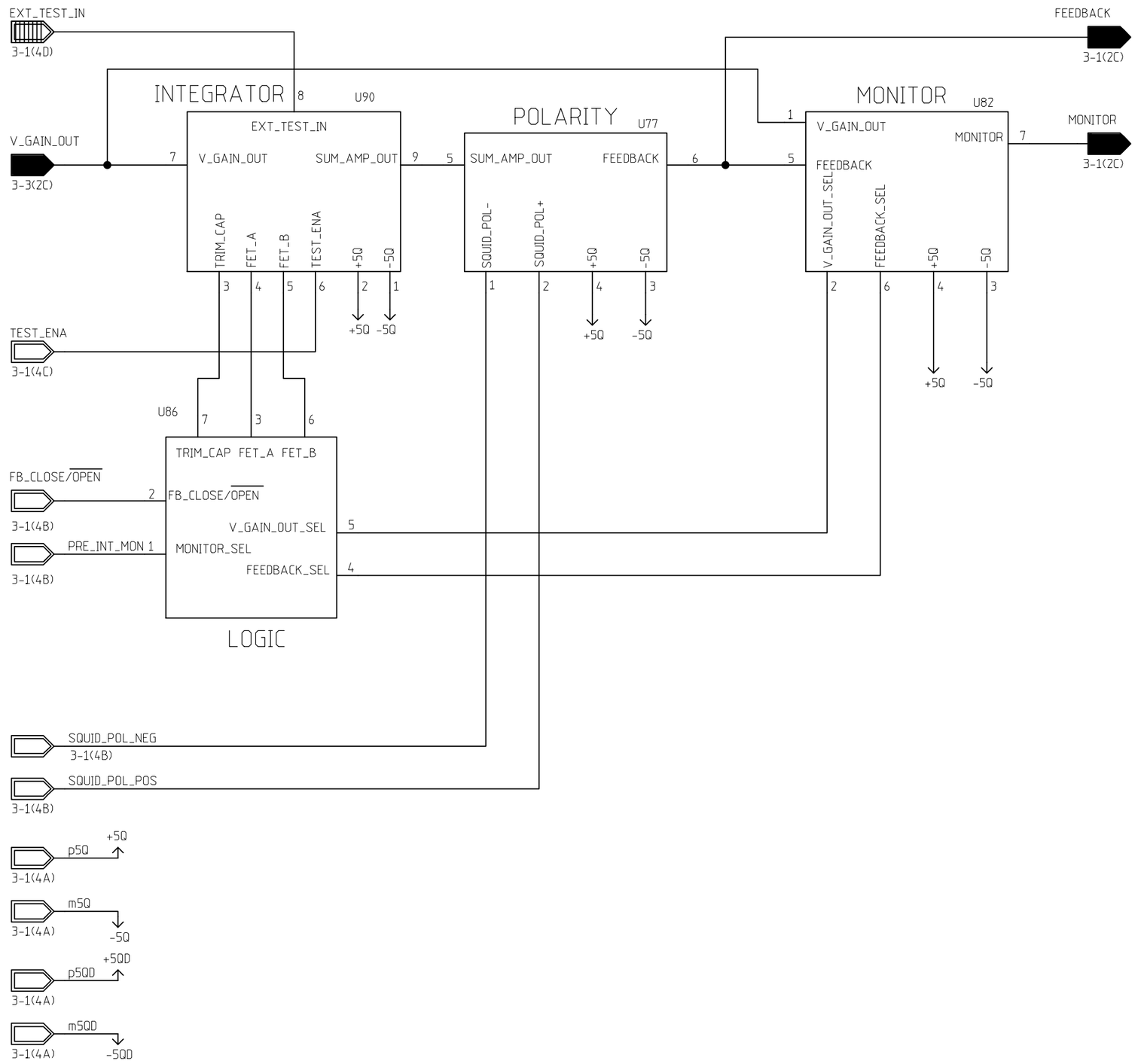

REVISIONS

REV	DESCRIPTION	DATE	APPROVED

	NAME	DATE
ORIGINATOR	MERLE HALDEMAN	11/13/98
DRAWN	BRUCE MERKEL	11/13/98
CHECKED	TOM CRENNA	1/6/99
APPROVED		

FERMILAB PPD/ETT/ES CDMS (E-891)
ZIP MODULE
SQUID FEEDBACK CONTROL

SIZE	FSCM NO.	DWG. NO.	REV
B			

SCALE | SHEET 3-4

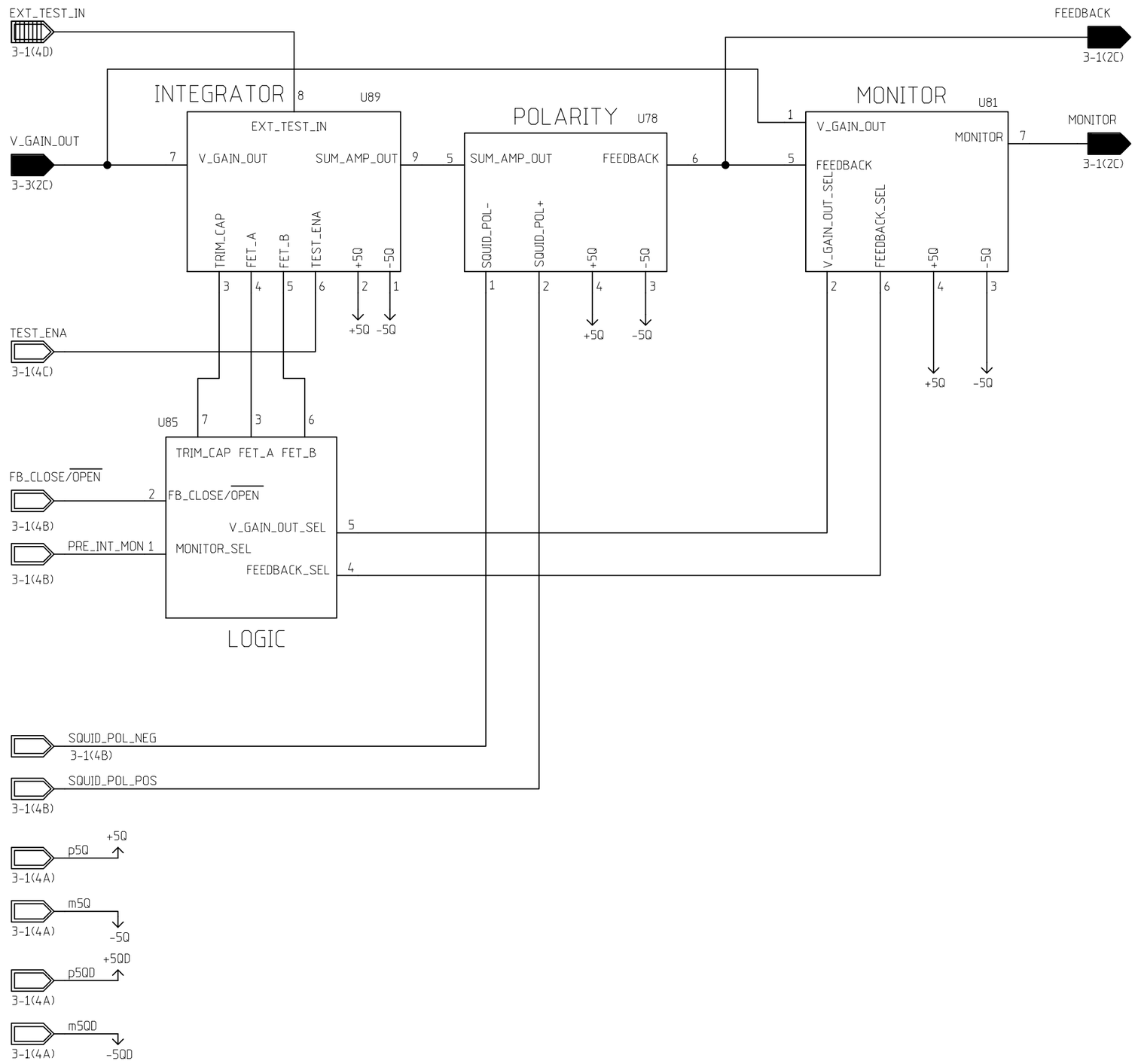

REVISIONS			
REV	DESCRIPTION	DATE	APPROVED

	NAME	DATE
ORIGINATOR	MERLE HALDEMAN	11/13/98
DRAWN	BRUCE MERKEL	11/13/98
CHECKED	TOM CRENNA	1/6/99
APPROVED		

FERMILAB PPD/ETT/ES CDMS (E-891)
ZIP MODULE
SQUID FEEDBACK CONTROL

SIZE	FSCM NO.	DWG. NO.	REV
B			

SCALE | SHEET 3-4

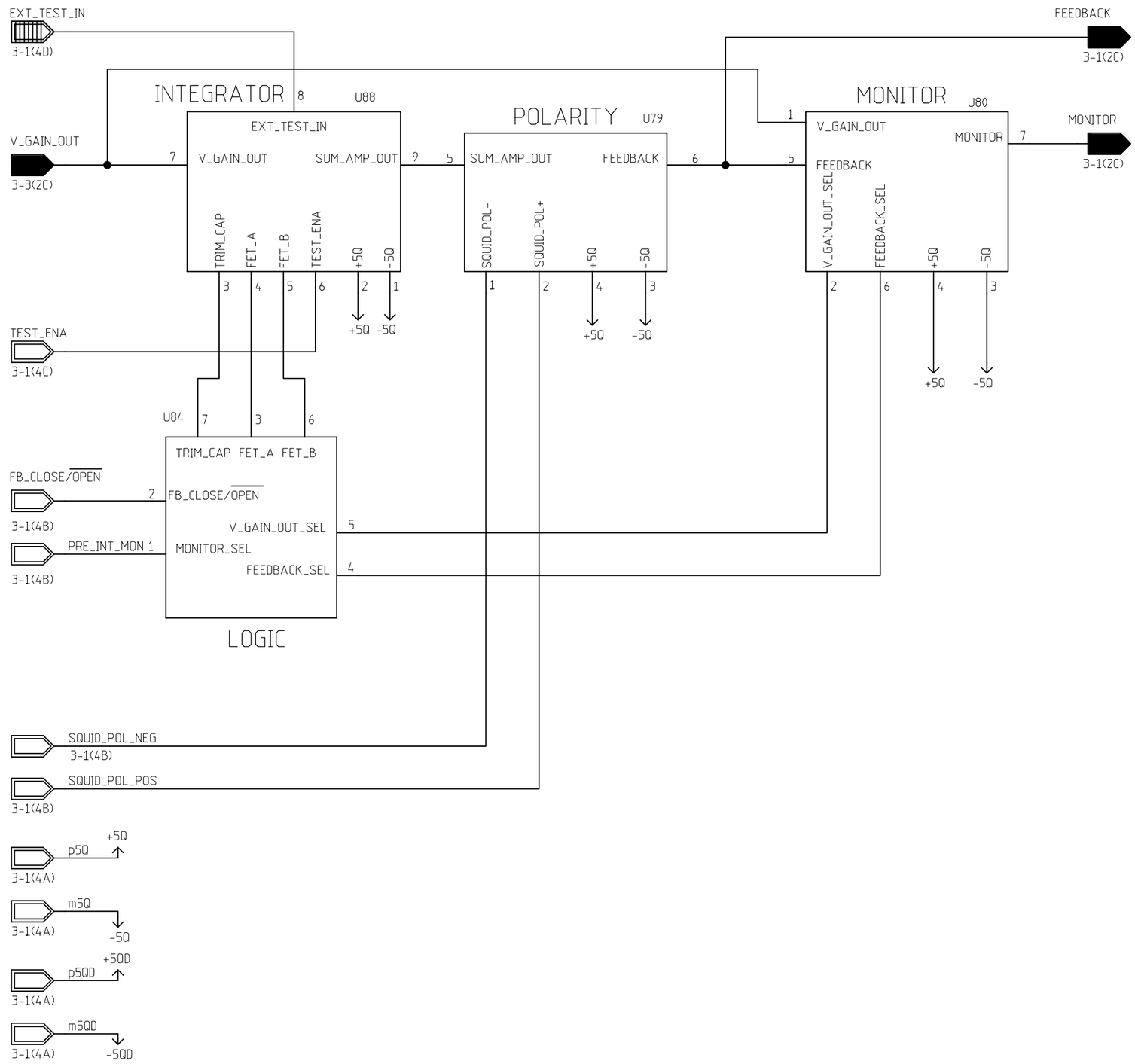

REVISIONS			
REV	DESCRIPTION	DATE	APPROVED

	NAME	DATE
ORIGINATOR	MERLE HALDEMAN	11/13/98
DRAWN	BRUCE MERKEL	11/13/98
CHECKED	TOM CRENNA	1/6/99
APPROVED		

FERMILAB PPD/ETT/ES CDMS (E-891)
ZIP MODULE
SQUID FEEDBACK CONTROL

SIZE	FSCM NO.	DWG. NO.	REV
B			

SCALE | SHEET 3-4

REVISIONS			
REV	DESCRIPTION	DATE	APPROVED

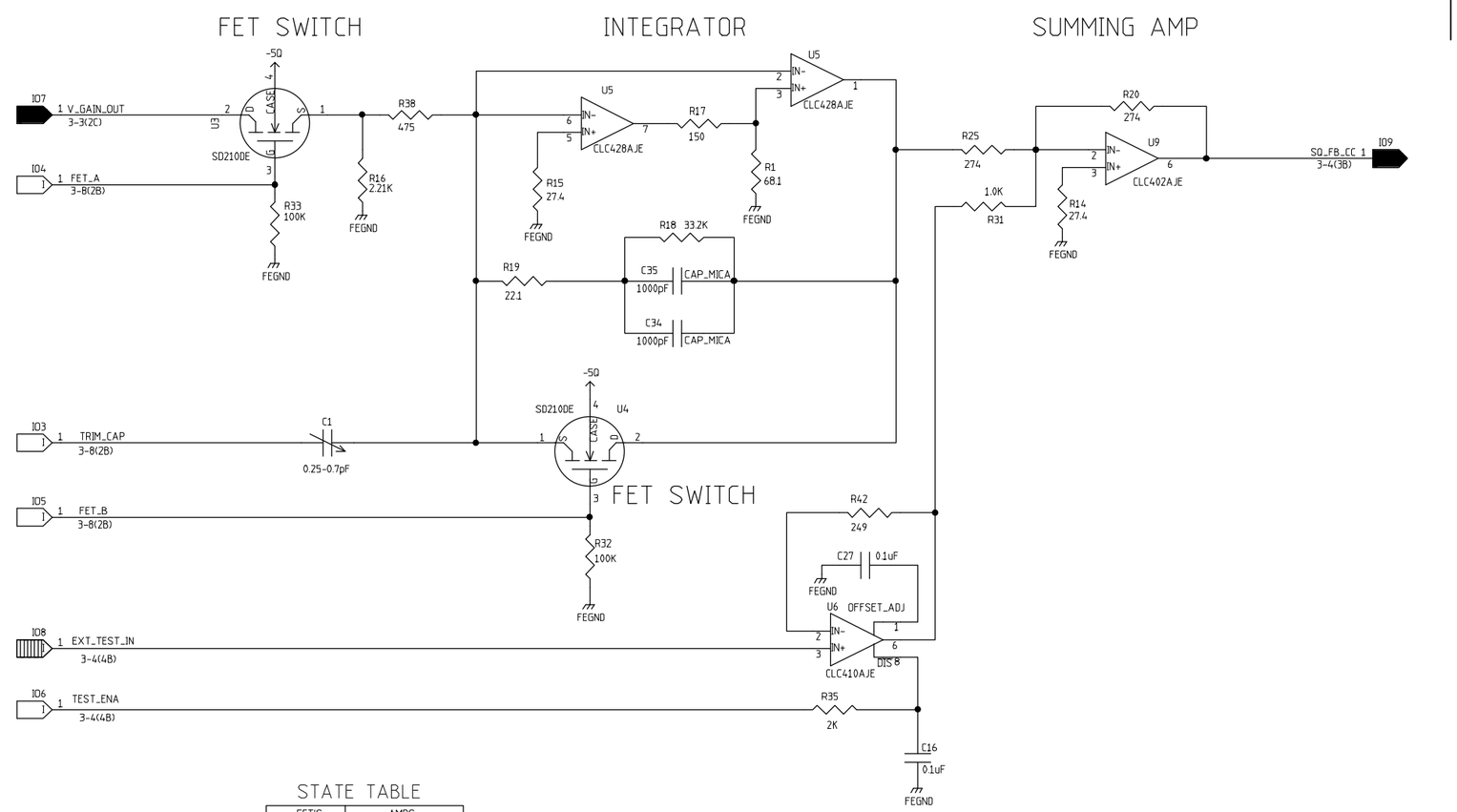

STATE TABLE

	FET'S		AMPS		
FB_O/C	U3	U4	U6	U7	U8
LOW	O	C	E	D	E
HI	C	O	D	E	D

O = OPEN C = CLOSED
E = ENABLE D = DISABLE

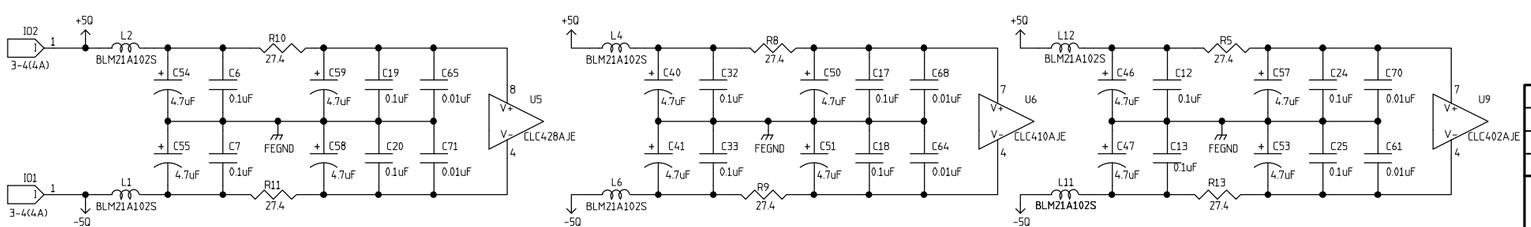

	NAME	DATE
ORIGINATOR	MERLE HALDEMAN	11/13/98
DRAWN	BRUCE MERKEL	11/13/98
CHECKED	TOM CRENNA	1/6/99
APPROVED		

FERMILAB PPD/ETT/ES CDMS (E-891)
ZIP MODULE
SQUID FEEDBACK INTEGRATOR

SIZE	FSCM NO.	DWG. NO.	REV
C			
SCALE		SHEET 3-5	

REVISIONS			
REV	DESCRIPTION	DATE	APPROVED

POLARITY SELECTION

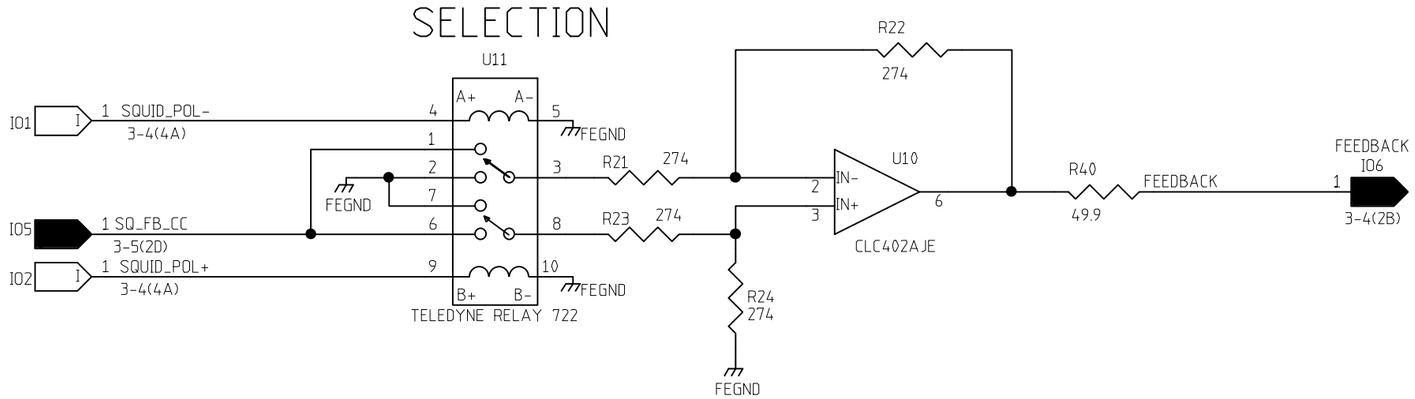

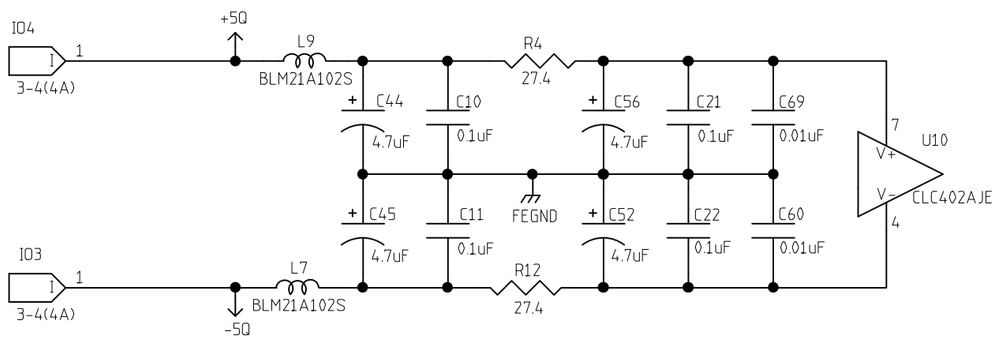

	NAME	DATE
ORIGINATOR	MERLE HALDEMAN	11/13/98
DRAWN	BRUCE MERKEL	11/13/98
CHECKED	TOM CRENNA	1/6/99
APPROVED		

FERMILAB PPD/ETT/ES CDMS (E-891)
ZIP MODULE
SQUID FEEDBACK POLARITY

SIZE	FSCM NO.	DWG. NO.	REV
B			
SCALE		SHEET 3-6	

REVISIONS			
REV	DESCRIPTION	DATE	APPROVED

MONITOR SELECTION

AMPLIFIERS

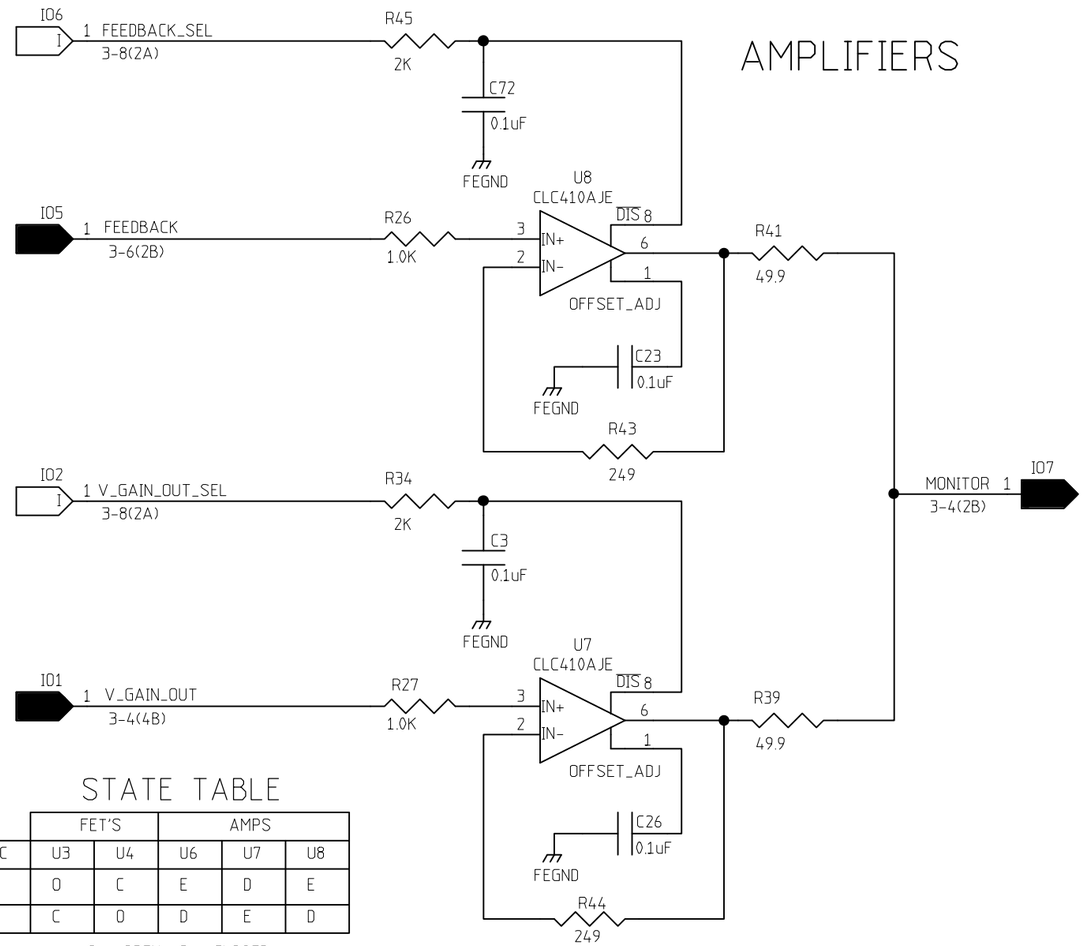

STATE TABLE

	FET'S		AMPS		
FB_O/C	U3	U4	U6	U7	U8
LOW	O	C	E	D	E
HI	C	O	D	E	D

O = OPEN C = CLOSED
E = ENABLE D = DISABLE

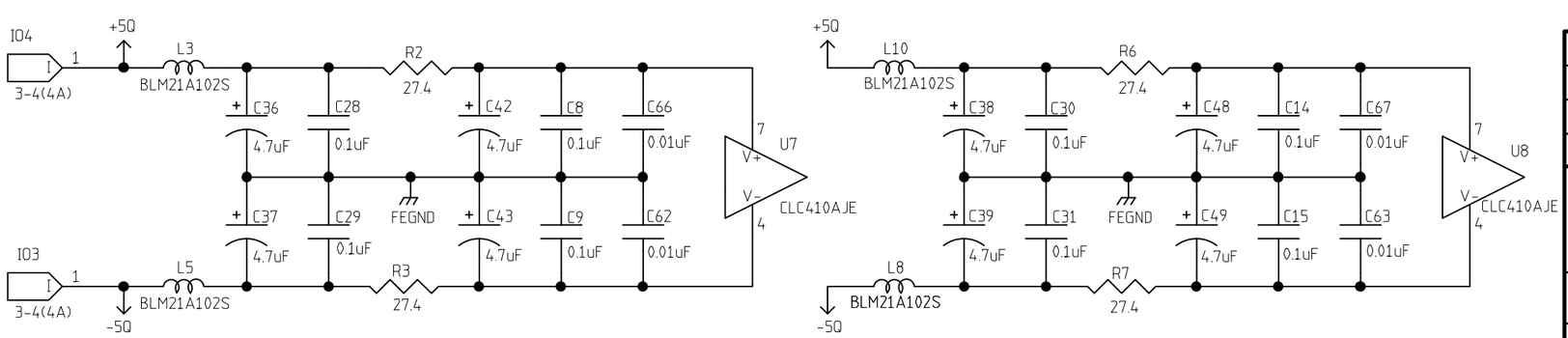

	NAME	DATE
ORIGINATOR	MERLE HALDEMAN	11/13/98
DRAWN	BRUCE MERKEL	11/13/98
CHECKED	TOM CRENNA	1/6/99
APPROVED		

FERMILAB PPD/ETT/ES CDMS (E-891)
ZIP MODULE
SQUID FEEDBACK MONITOR

SIZE	FSCM NO.	DWG. NO.	REV
B			
SCALE		SHEET 3-7	

REVISIONS			
REV	DESCRIPTION	DATE	APPROVED

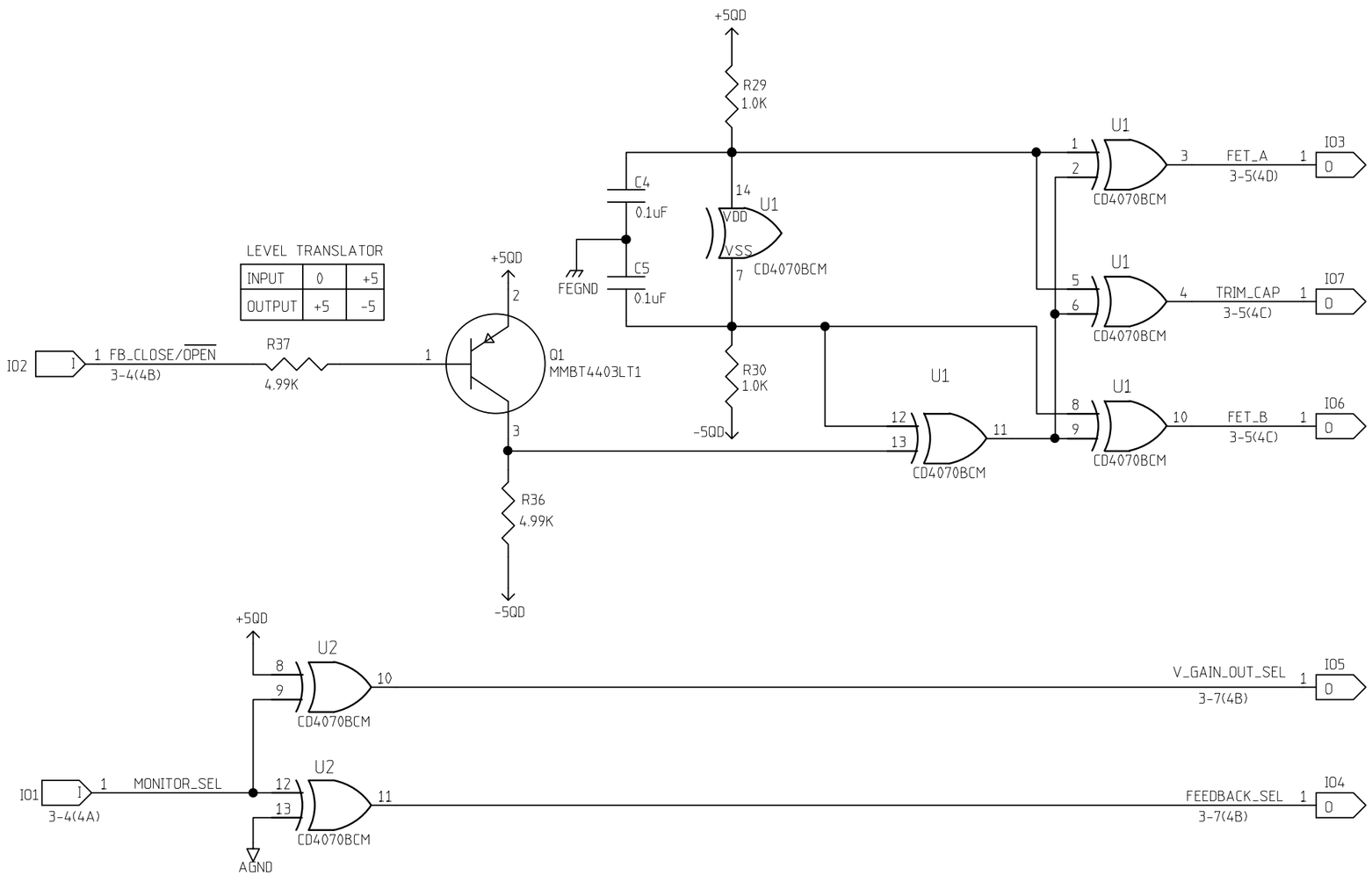

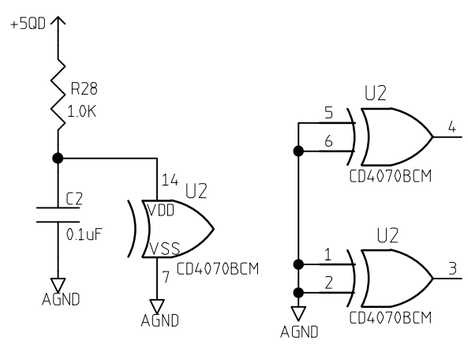

NOTE: U1 POWER SHOWN ABOVE

	NAME	DATE
ORIGINATOR	MERLE HALDEMAN	11/16/98
DRAWN	BRUCE MERKEL	11/16/98
CHECKED	TOM CRENNA	1/6/99
APPROVED		

FERMILAB PPD/ETT/ES CDMS (E-891)
ZIP MODULE
SQUID FEEDBACK LOGIC

SIZE	FSCM NO.	DWG. NO.	REV
B			
SCALE		SHEET 3-8	

REVISIONS			
REV	DESCRIPTION	DATE	APPROVED

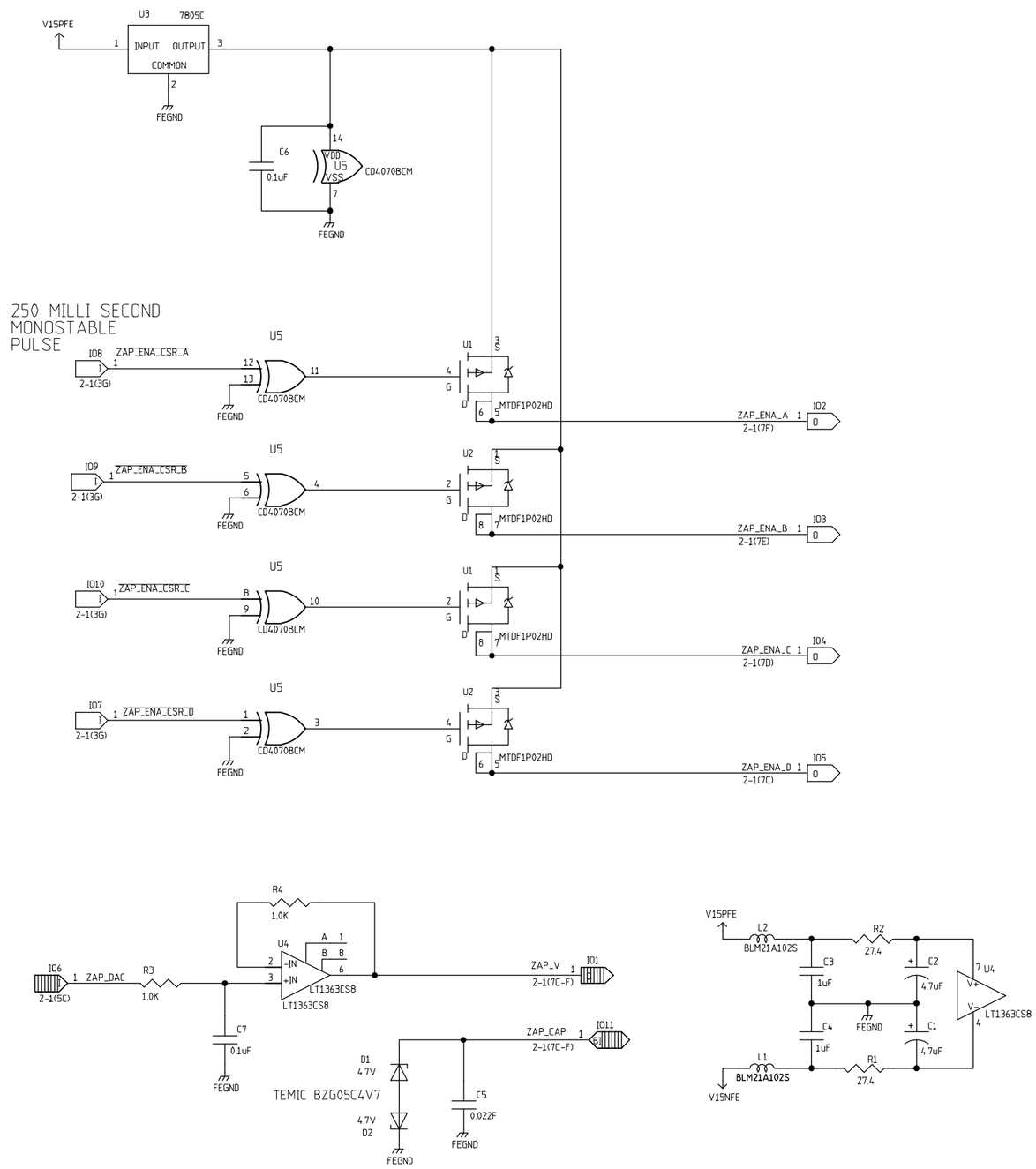

REVISED 1/11/99 BRUCE MERKEL

	NAME	DATE
ORIGINATOR	MERLE HALDEMAN	11/17/98
DRAWN	BRUCE MERKEL	11/17/98
CHECKED	TOM CRENNA	1/6/99
APPROVED		

FERMILAB PPD/ETT/ES CDMS (E-891)
ZIP MODULE
SQUID ZAP CONTROL

SIZE	FSCM NO.	DWG. NO.	REV
C			
SCALE		SHEET 4-1	

REVISIONS			
REV	DESCRIPTION	DATE	APPROVED
0	UNDER DEVELOPMENT	1-20-99	

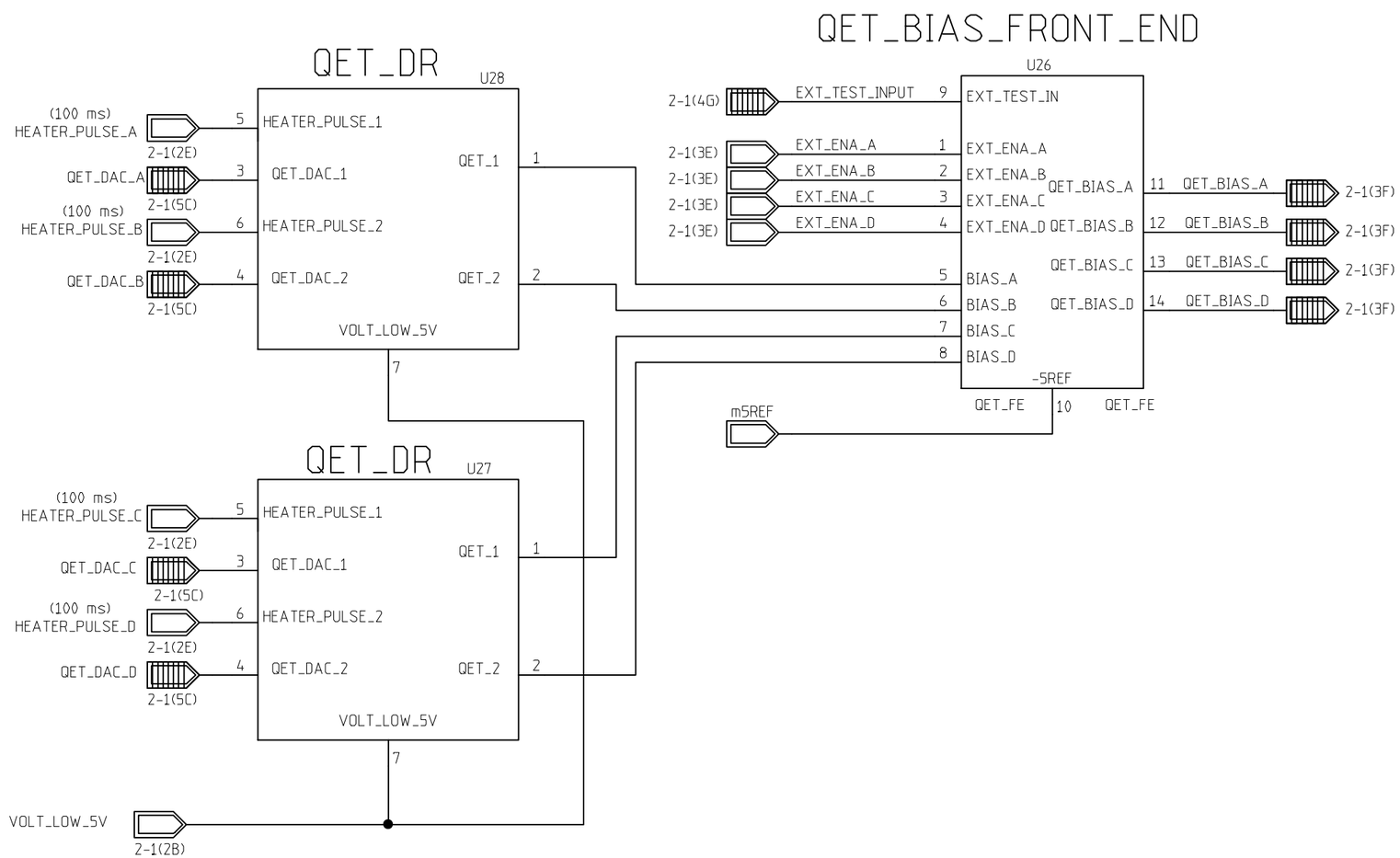

	NAME	DATE
ORIGINATOR	MERLE HALDEMAN	11/16/98
DRAWN	BRUCE MERKEL	11/16/98
CHECKED	TOM CRENNA	1/6/99
APPROVED		

FERMILAB PPD/ETT/ES CDMS (E-891)
ZIP MODULE
QET BLOCK DIAGRAM

SIZE	FSCM NO.	DWG. NO.	REV
B			
SCALE		SHEET 5-1	

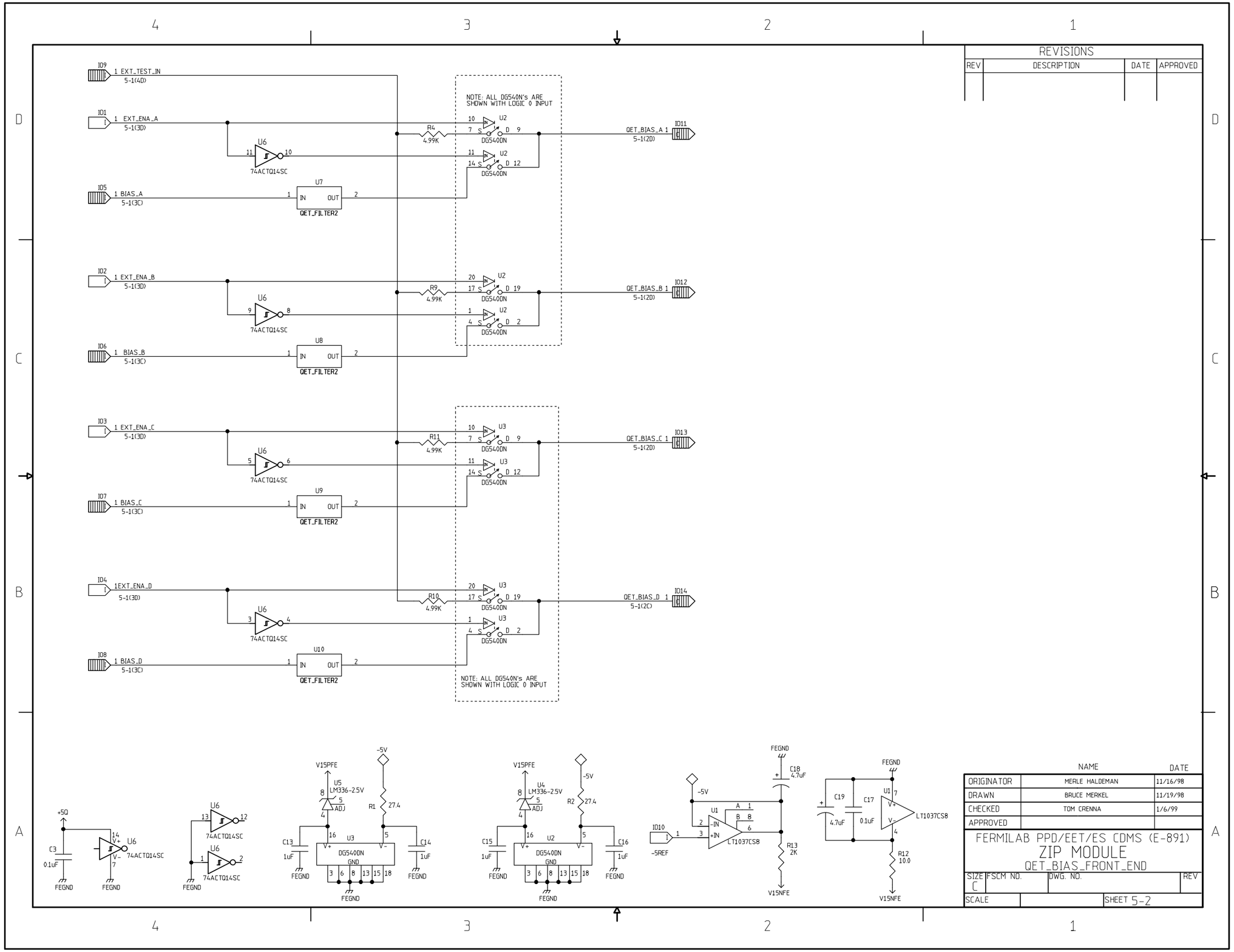

REVISIONS			
REV	DESCRIPTION	DATE	APPROVED

	NAME	DATE
ORIGINATOR	MERLE HALDEMAN	11/16/98
DRAWN	BRUCE MERKEL	11/19/98
CHECKED	TOM CRENNA	1/6/99
APPROVED		

FERMILAB PPD/EET/ES CDMS (E-891)

ZIP MODULE

QET_BIAS_FRONT_END

SIZE	FSCM NO.	DWG. NO.	REV
C			
SCALE		SHEET 5-2	

REVISIONS			
REV	DESCRIPTION	DATE	APPROVED

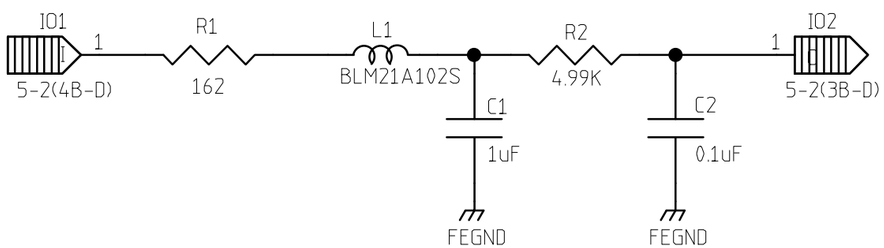

	NAME	DATE
ORIGINATOR	MERLE HALDEMAN	11/16/98
DRAWN	BRUCE MERKEL	11/19/98
CHECKED	TOM CRENNA	1/6/99
APPROVED		

FERMILAB PPD/EET/ES CDMS (E-891)

ZIP MODULE

QET_BIAS_FRONT_END FILTER

SIZE	FSCM NO.	DWG. NO.	REV
A			

SCALE		SHEET 5-3

REVISIONS			
REV	DESCRIPTION	DATE	APPROVED

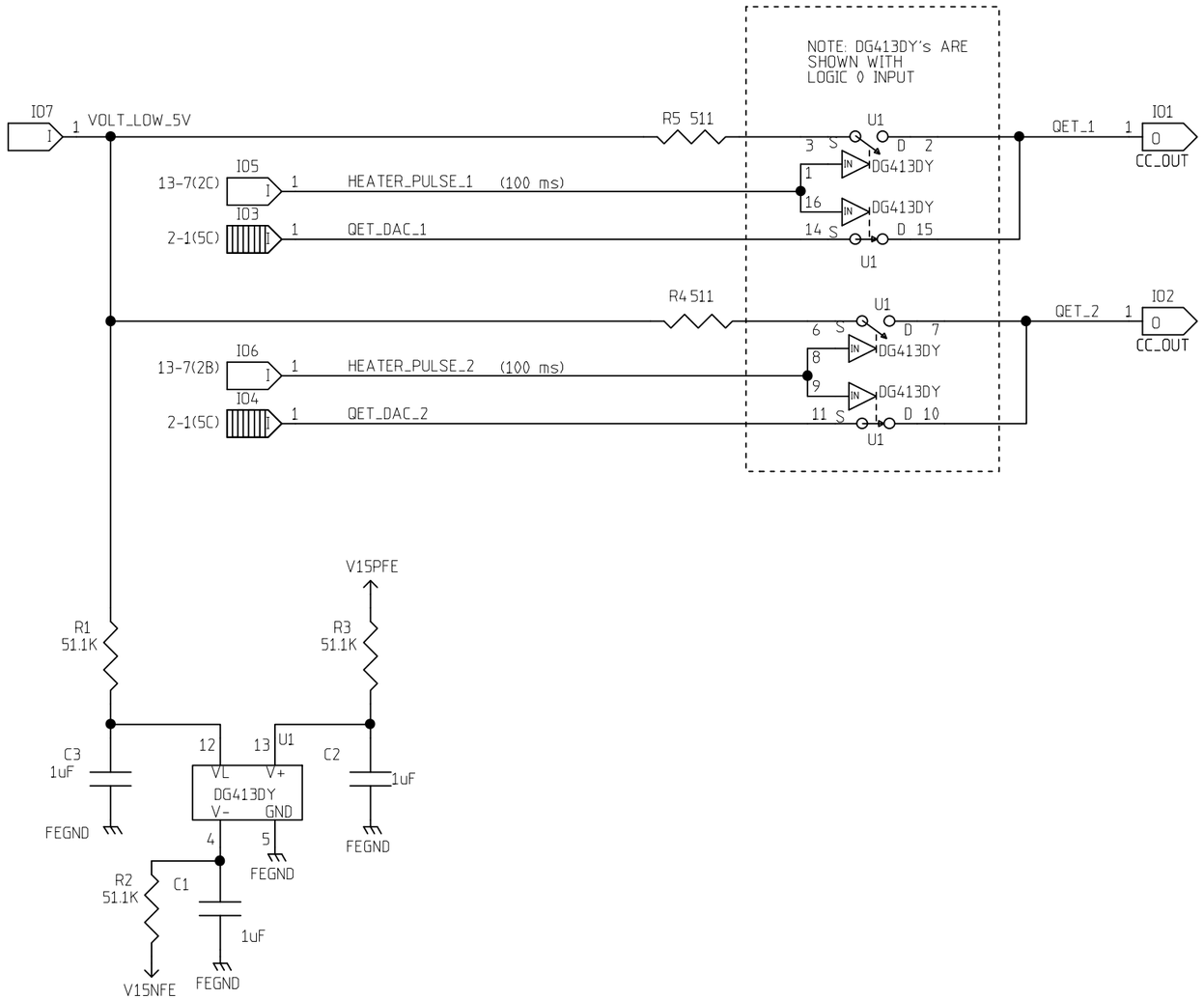

	NAME	DATE
ORIGINATOR	MERLE HALDEMAN	11/16/98
DRAWN	BRUCE MERKEL	11/16/98
CHECKED	TOM CRENNA	1/6/99
APPROVED		

FERMILAB PPD/ETT/ES CDMS (E-891)
ZIP MODULE
QET_DR

SIZE	FSCM NO.	DWG. NO.	REV
B			
SCALE		SHEET 5-4	

REVISIONS			
REV	DESCRIPTION	DATE	APPROVED

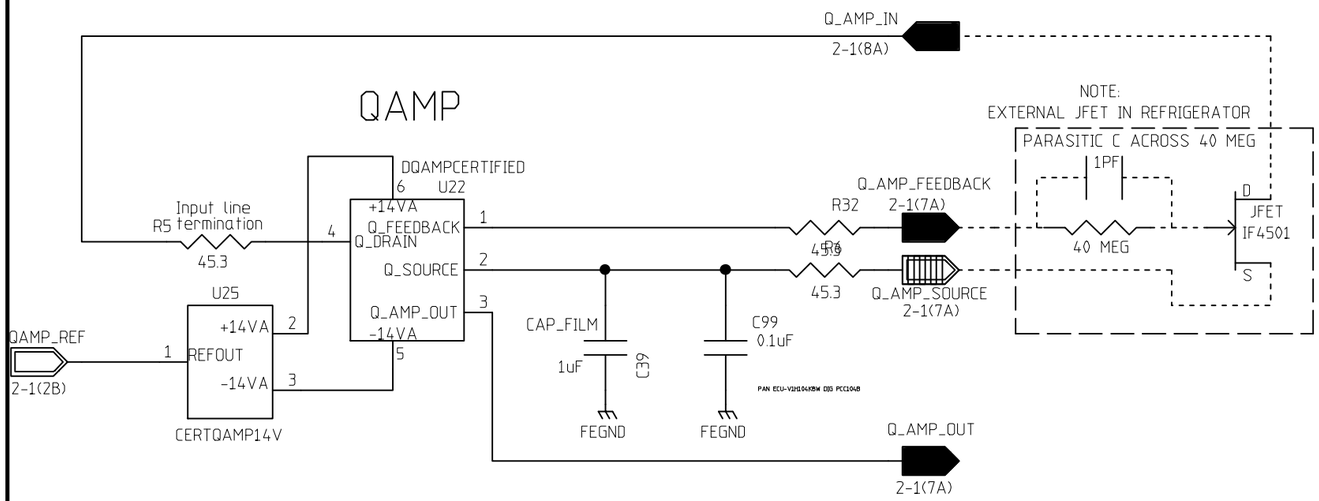

	NAME	DATE
ORIGINATOR	MERLE HALDEMAN	11/16/98
DRAWN	BRUCE MERKEL	11/16/98
CHECKED	TOM CRENNA	1/6/99
APPROVED		

FERMILAB PPD/ETT/ES CDMS (E-891)
ZIP MODULE
QAMP BLOCK DIAGRAM

SIZE	FSCM NO.	DWG. NO.	REV
B			
SCALE		SHEET 6-1	

REVISIONS			
REV	DESCRIPTION	DATE	APPROVED

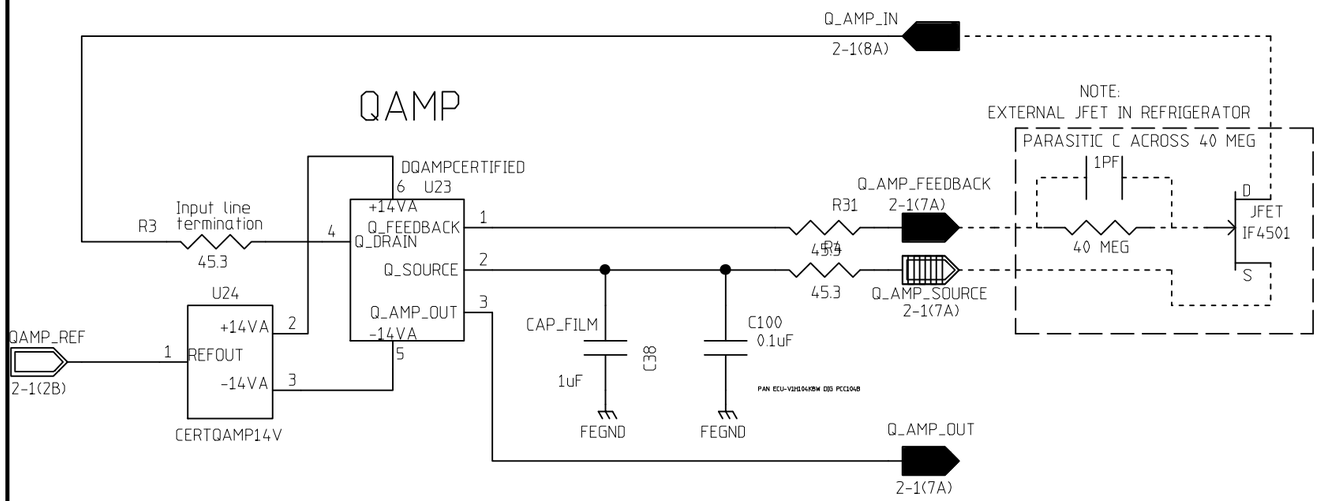

	NAME	DATE
ORIGINATOR	MERLE HALDEMAN	11/16/98
DRAWN	BRUCE MERKEL	11/16/98
CHECKED	TOM CRENNA	1/6/99
APPROVED		

FERMILAB PPD/ETT/ES CDMS (E-891)
ZIP MODULE
QAMP BLOCK DIAGRAM

SIZE	FSCM NO.	DWG. NO.	REV
B			
SCALE		SHEET 6-1	

REVISIONS			
REV	DESCRIPTION	DATE	APPROVED

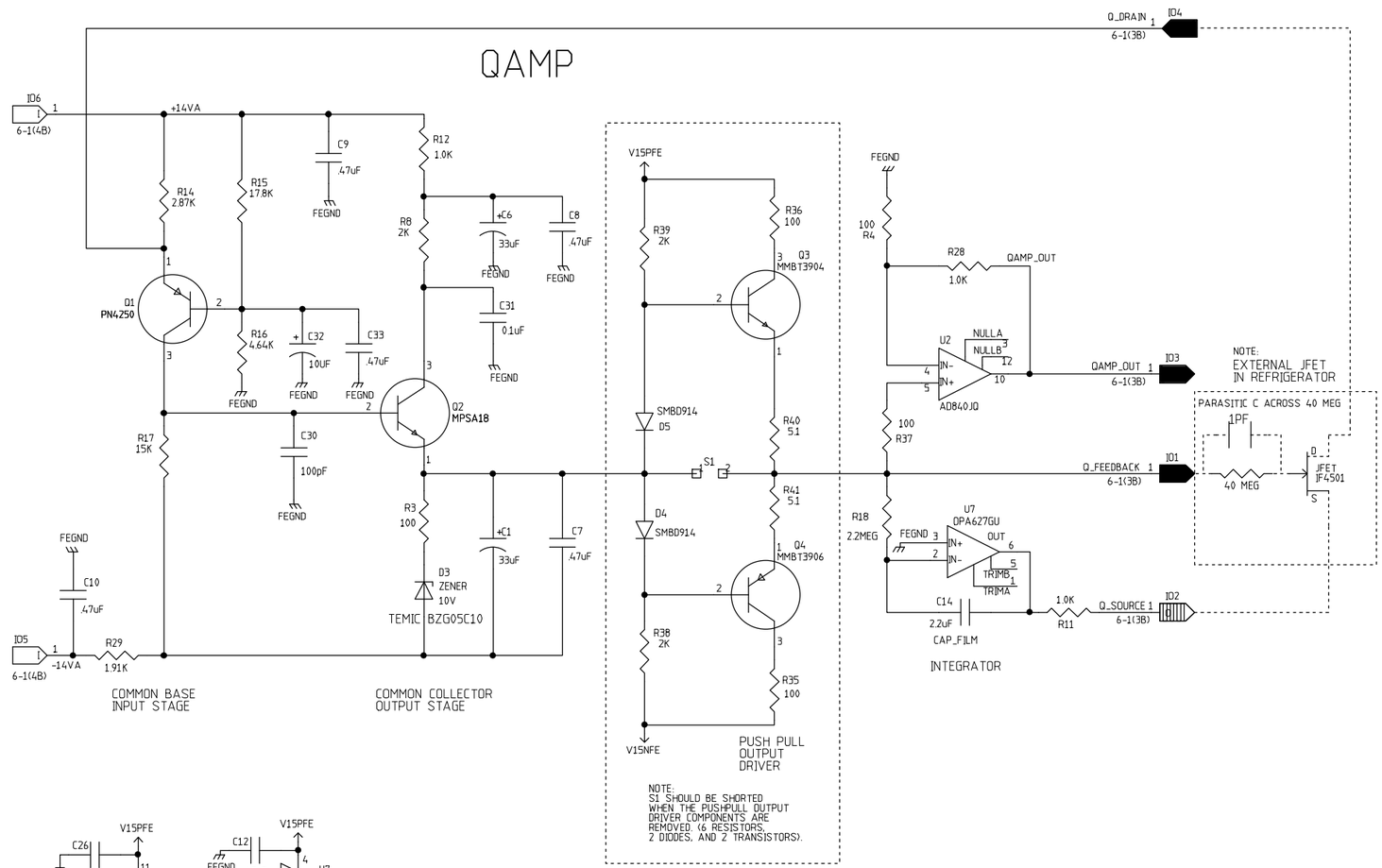

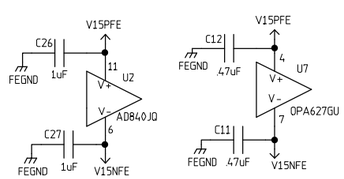

	NAME	DATE
ORIGINATOR	MERLE HALDEMAN	11/16/98
DRAWN	BRUCE MERKEL	11/16/98
CHECKED	TOM CRENNA	1/6/99
APPROVED		

FERMILAB PPD/EET/ES CDMS (E-891)
ZIP MODULE
DISCRETE Q AMPLIFIER

SIZE	FSCM NO.	DWG. NO.	REV
C			
SCALE		SHEET 6-2	

REVISIONS			
REV	DESCRIPTION	DATE	APPROVED

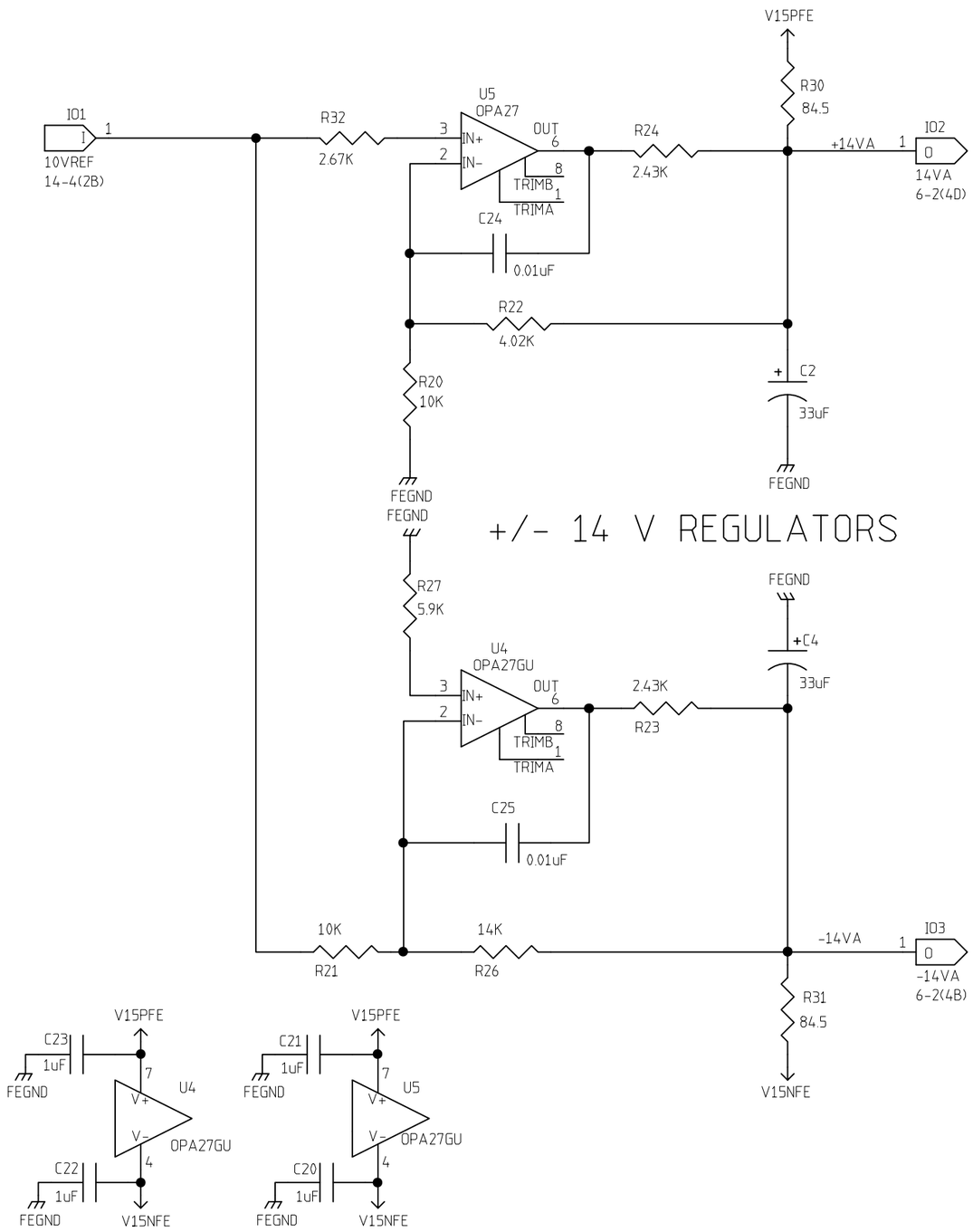

	NAME	DATE
ORIGINATOR	MERLE HALDEMAN	11/16/98
DRAWN	BRUCE MERKEL	11/16/98
CHECKED	TOM CRENNA	1/6/99
APPROVED		

FERMILAB PPD/ ETT/ ES CDMS (E-891)

ZIP MODULE

Q AMP 14V

SIZE	FSCM NO.	DWG. NO.	REV
B			

SCALE | SHEET 6-3

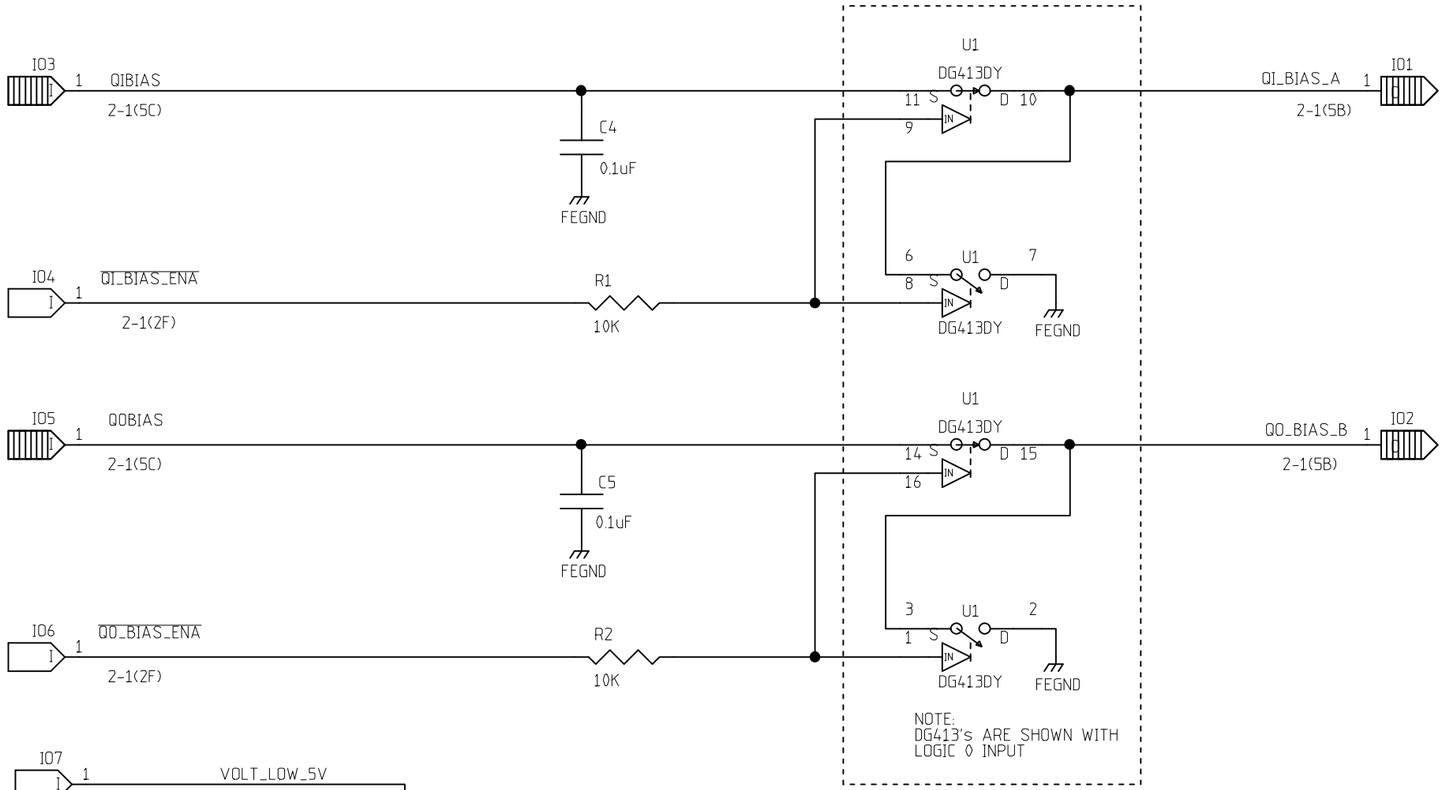

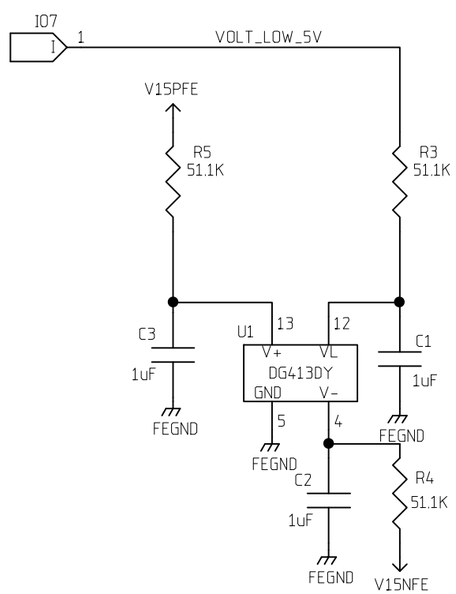

REVISIONS			
REV	DESCRIPTION	DATE	APPROVED

	NAME	DATE
ORIGINATOR	MERLE HALDEMAN	11/16/98
DRAWN	BRUCE MERKEL	12/08/98
CHECKED	TOM CRENNA	1/6/99
APPROVED		

FERMILAB PPD/ETT/ES CDMS (E-891)
ZIP MODULE
QBIAS FRONT END

SIZE	FSCM NO.	DWG. NO.	REV
B			
SCALE		SHEET 7-1	

REVISIONS			
REV	DESCRIPTION	DATE	APPROVED
0	MOVED DIGITAL OUT OF ANALOG AREA	3/24/99	B MERKEL

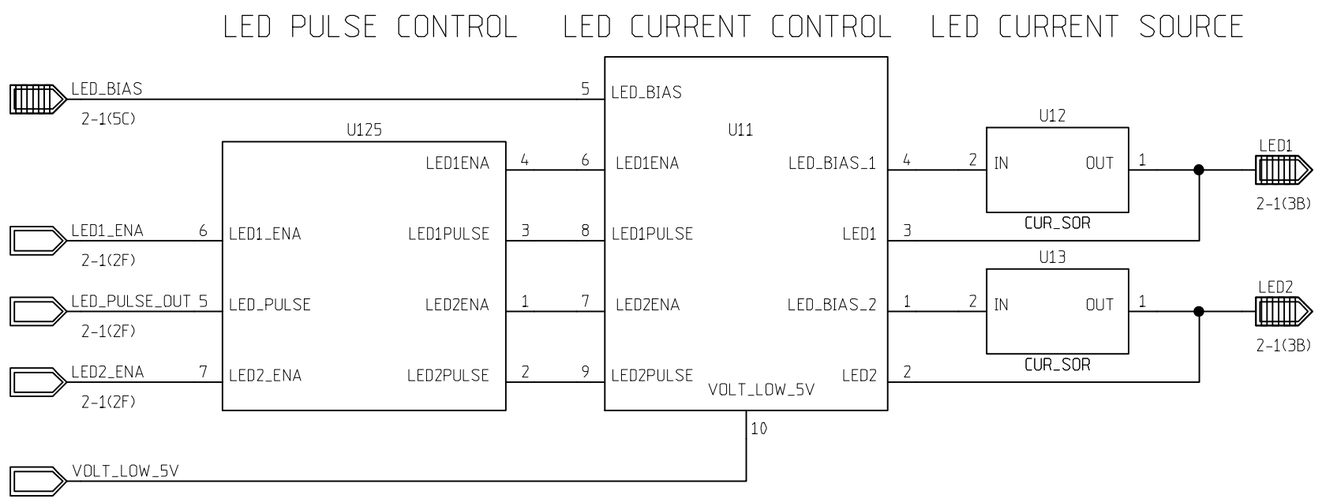

	NAME	DATE
ORIGINATOR	MERLE HALDEMAN	11/16/98
DRAWN	BRUCE MERKEL	3/24/99
CHECKED		
APPROVED		

FERMILAB PPD/ETT/ES CDMS (E-891)
ZIP MODULE
LED BLOCK DIAGRAM

SIZE	FSCM NO.	DWG. NO.	REV
B			

SCALE | SHEET 8-1

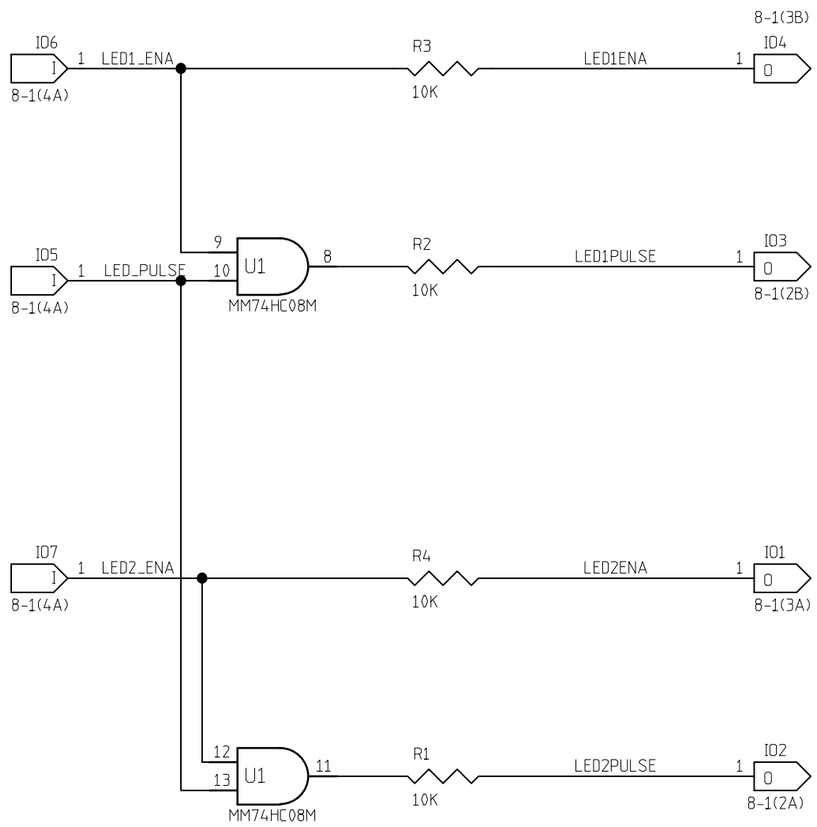

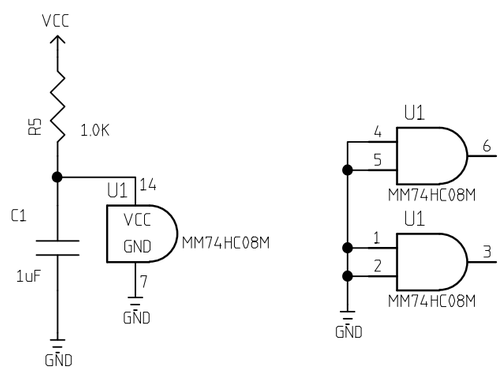

REVISIONS

REV	DESCRIPTION	DATE	APPROVED

	NAME	DATE
ORIGINATOR	MERLE HALDEMAN	3/24/99
DRAWN	BRUCE MERKEL	3/24/99
CHECKED		
APPROVED		

FERMILAB PPD/ ETT/ ES CDMS(E-891)
ZIP MODULE
LED PULSE CONTROL

SIZE	FSCM NO.	DWG. NO.	REV
B			

SCALE | SHEET 8-3

REVISIONS			
REV	DESCRIPTION	DATE	APPROVED
0	ADDED A 5V OUTSIDE SOURCE AND REMOVED THE DIGITAL LOGIC TO THE DIGITAL SECTION	3/24/99	B MERKEL

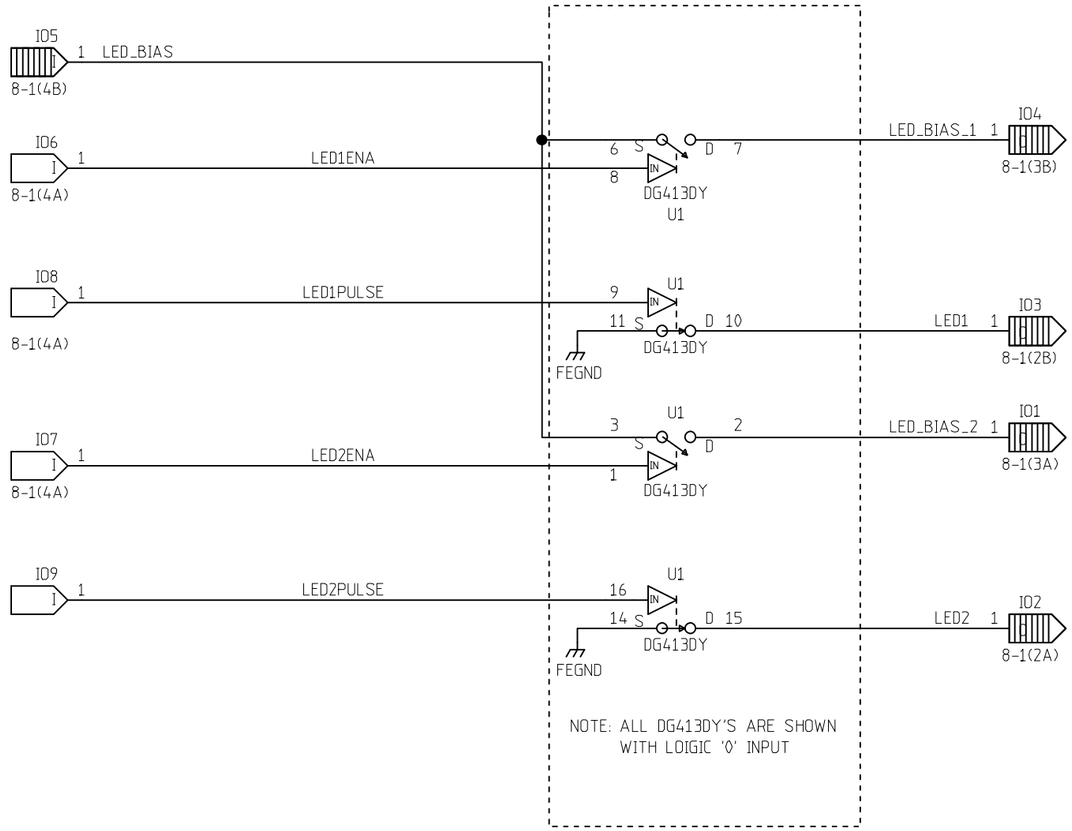

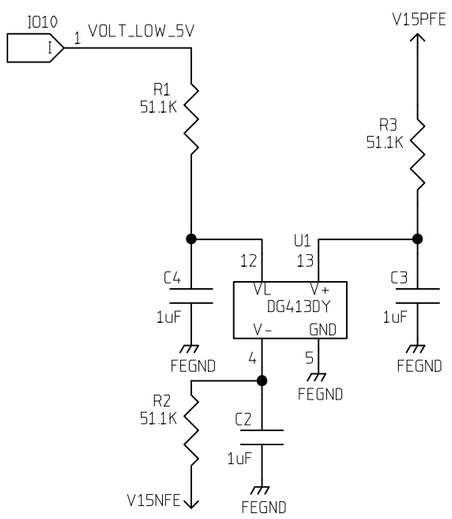

	NAME	DATE
ORIGINATOR	MERLE HALDEMAN	11/16/98
DRAWN	BRUCE MERKEL	12/17/98
CHECKED	TOM CRENNA	1/6/99
APPROVED		

FERMILAB PPD/ ETT/ ES CDMS(E-891)
ZIP MODULE
LED CURRENT CONTROL

SIZE	FSCM NO.	DWG. NO.	REV
B			
SCALE		SHEET 8-4	

REVISIONS			
REV	DESCRIPTION	DATE	APPROVED

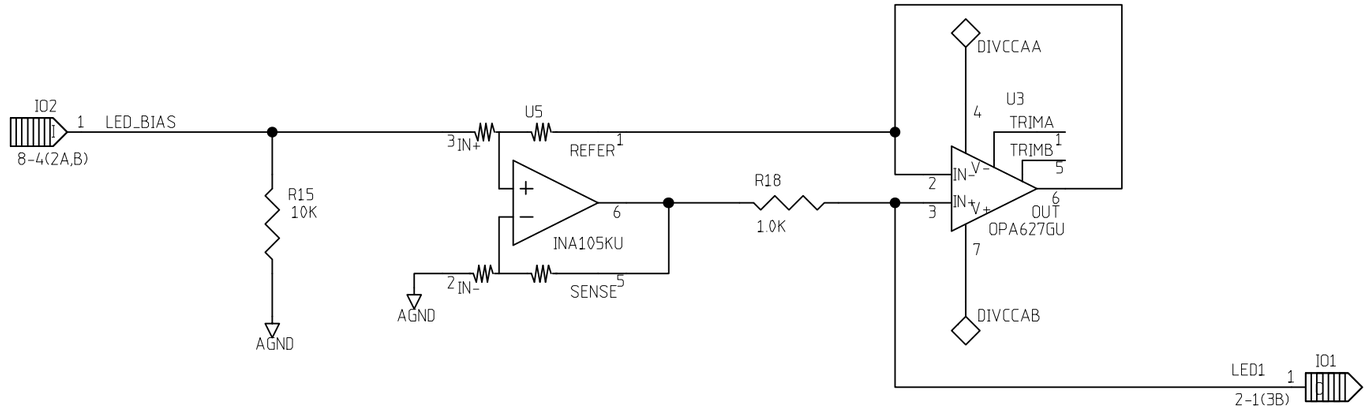

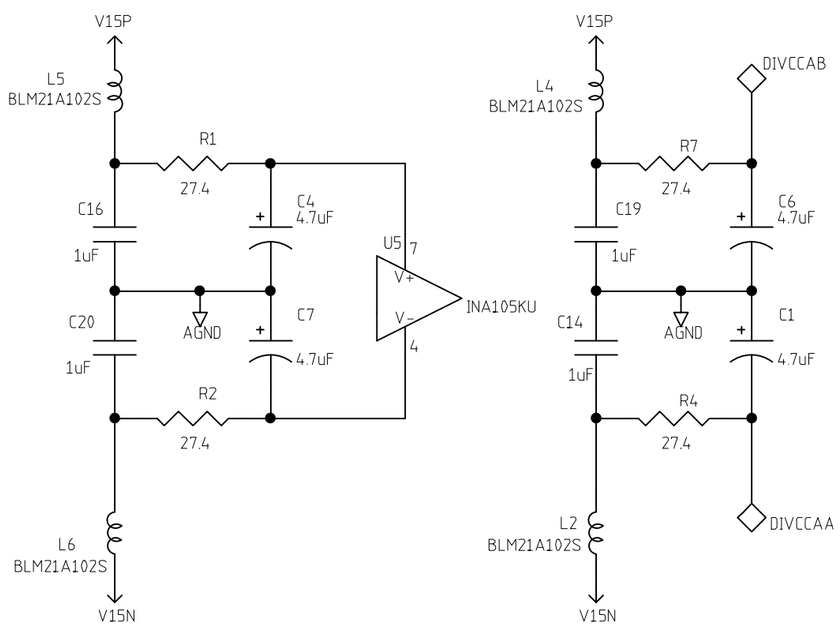

	NAME	DATE
ORIGINATOR	MERLE HALDEMAN	11/16/98
DRAWN	BRUCE MERKEL	12/09/98
CHECKED	TOM CRENNA	1/6/99
APPROVED		

FERMILAB PPD/ ETT/ ES CDMS(E-891)
ZIP MODULE
LED CURRENT SOURCE

SIZE	FSCM NO.	DWG. NO.	REV
B			
SCALE		SHEET 8-5	

MONENTARY PUSH BUTTON
FRONT PANEL MOUNT SWITCH

REVISIONS			
REV	DESCRIPTION	DATE	APPROVED

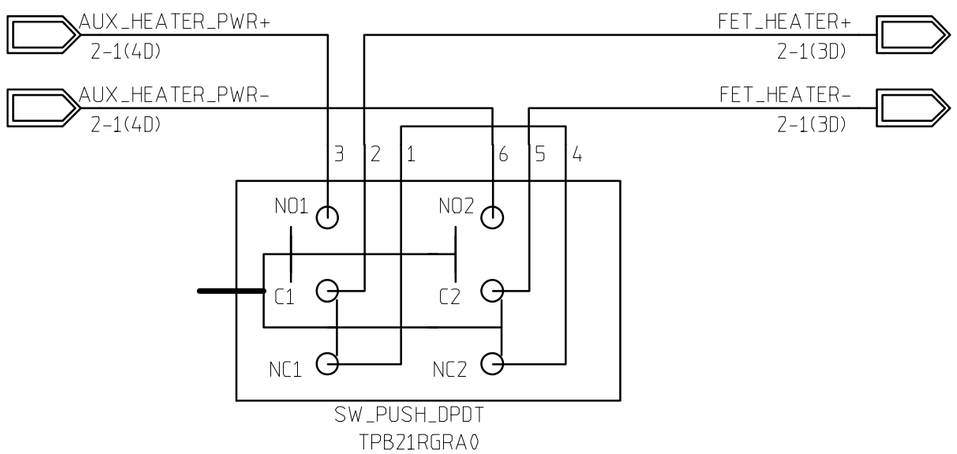

FETTEMP

	NAME	DATE
ORIGINATOR	MERLE HALDEMAN	11/16/98
DRAWN	BRUCE MERKEL	11/16/98
CHECKED	TOM CRENNA	1/6/99
APPROVED		

FERMILAB PPD/EET/ES CDMS (E-891)
ZIP MODULE
FETTEMP

SIZE	FSCM NO.	DWG. NO.	REV
A			

SCALE		SHEET 9-1

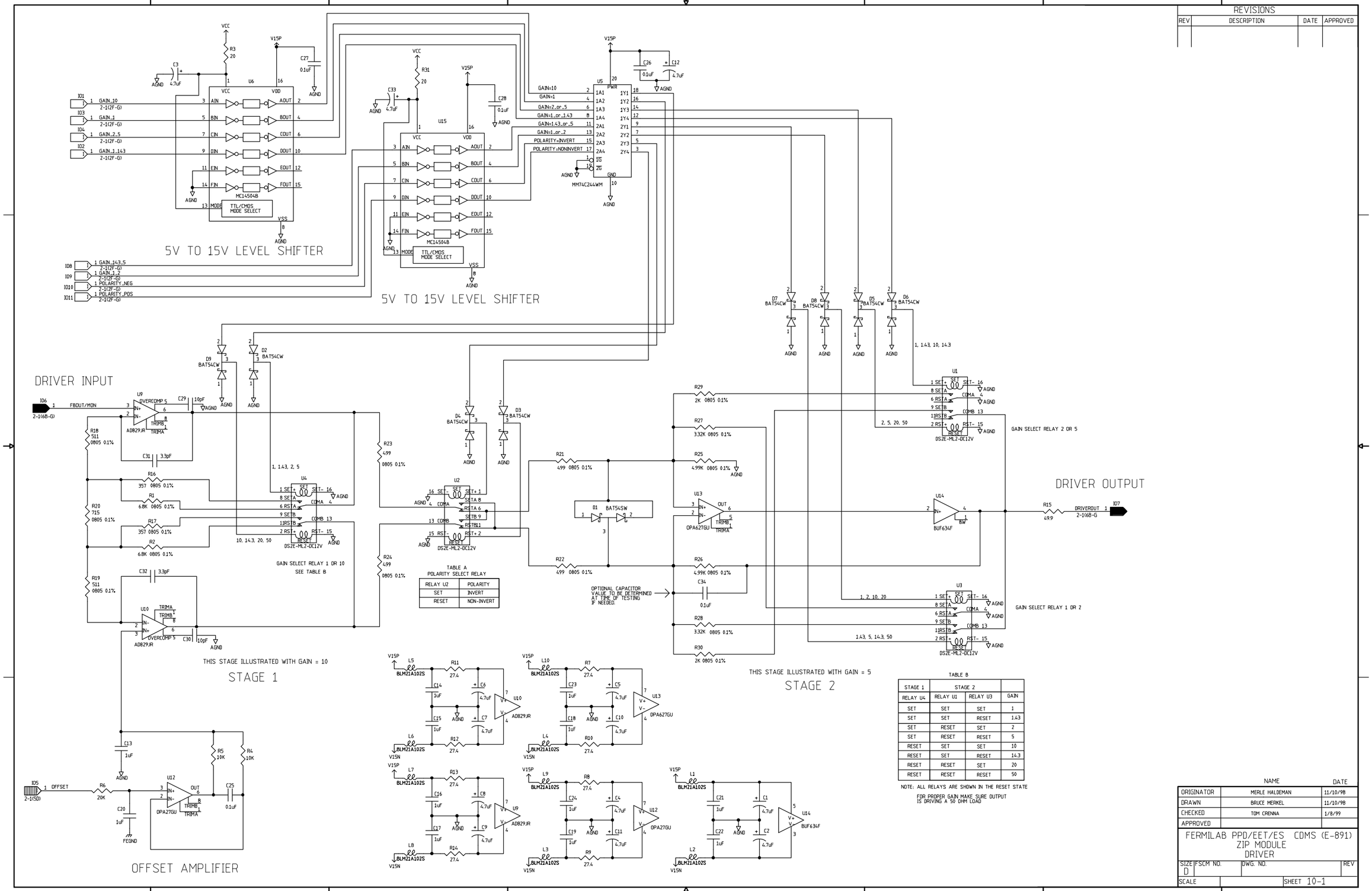

TABLE A
POLARITY SELECT RELAY

RELAY U2	POLARITY
SET	INVERT
RESET	NON-INVERT

TABLE B

STAGE 1	STAGE 2		
RELAY U4	RELAY U1	RELAY U3	GAIN
SET	SET	SET	1
SET	SET	RESET	1.43
SET	RESET	SET	2
SET	RESET	RESET	5
RESET	SET	SET	10
RESET	SET	RESET	14.3
RESET	RESET	SET	20
RESET	RESET	RESET	50

NOTE: ALL RELAYS ARE SHOWN IN THE RESET STATE

FOR PROPER GAIN MAKE SURE OUTPUT IS DRIVING A 50 OHM LOAD

REVISIONS			
REV	DESCRIPTION	DATE	APPROVED
A	CHANGED U1 FROM ANALOG DEVUCES SSM2141S TO LINEAR TECHNOLOGY LT1357CS8 FOR FASTER RESPONSE ALSO ADDED TWO 4.7uF CAPS TO BYPASS	4/28/99	M.HALDEMAN

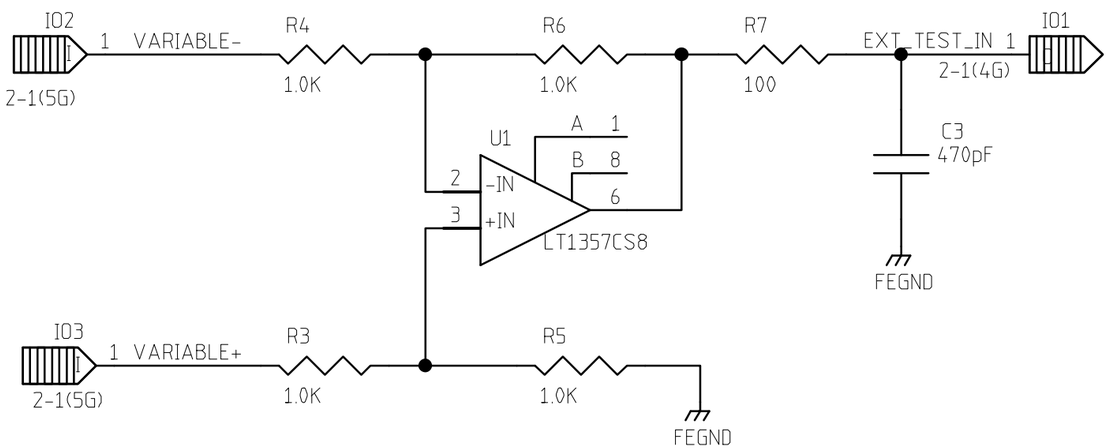

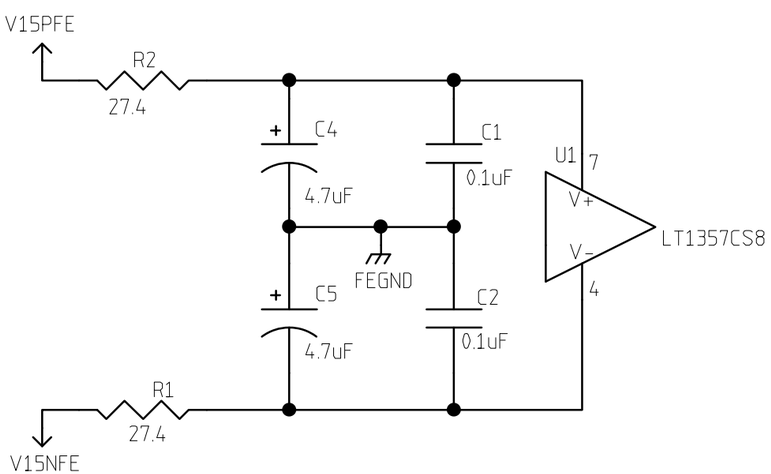

NOTE: FOR HIGHER SPEED USE A LT1363CS8

	NAME	DATE
ORIGINATOR	MERLE HALDEMAN	11/16/98
DRAWN	BRUCE MERKEL	11/16/98
CHECKED	TOM CRENNA	1/8/99
APPROVED		

FERMILAB PPD/ETT/ES CDMS (E-891)
ZIP MODULE
EXTERNAL TEST RECEIVER

SIZE	FSCM NO.	DWG. NO.	REV
A			A

SCALE | SHEET 11-1

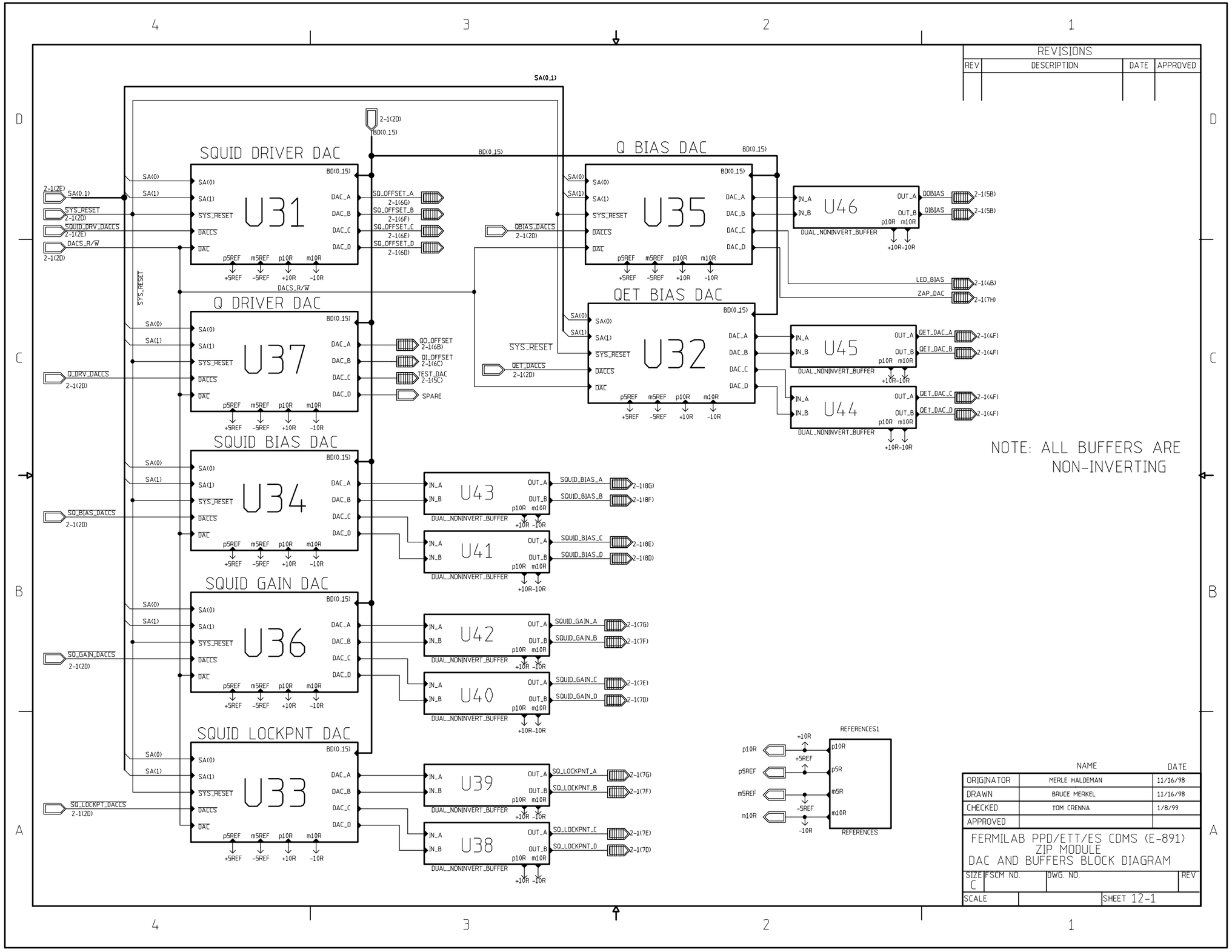

REVISIONS

REV	DESCRIPTION	DATE	APPROVED

	NAME	DATE
ORIGINATOR	MERLE HALDEMAN	11/16/98
DRAWN	BRUCE MERKEL	11/16/98
CHECKED	TOM CRENNA	1/8/99
APPROVED		

FERMILAB PPD/ETT/ES CDMS (E-891)
ZIP MODULE
DAC AND BUFFERS BLOCK DIAGRAM

SIZE	FSCM NO.	DWG. NO.	REV
C			
SCALE		SHEET 12-1	

REVISIONS			
REV	DESCRIPTION	DATE	APPROVED
0	UNDER DEVELOPMENT	1-19-99	

DAC 10 VOLT REGULATOR

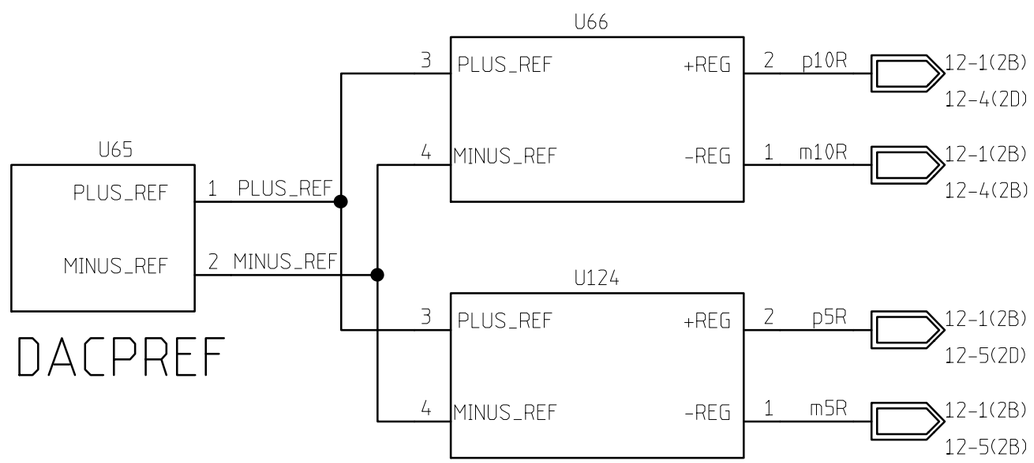

DAC 5 VOLT REGULATOR

	NAME	DATE
ORIGINATOR	MERLE HALDEMAN	11/16/98
DRAWN	BRUCE MERKEL	11/16/98
CHECKED	TOM CRENNA	1/8/99
APPROVED		

FERMILAB PPD/ ETT/ ES CDMS(E-891)
ZIP MODULE
DAC REFERENCES

SIZE	FSCM NO.	DWG. NO.	REV
A			

SCALE | SHEET 12-2

REVISIONS			
REV	DESCRIPTION	DATE	APPROVED

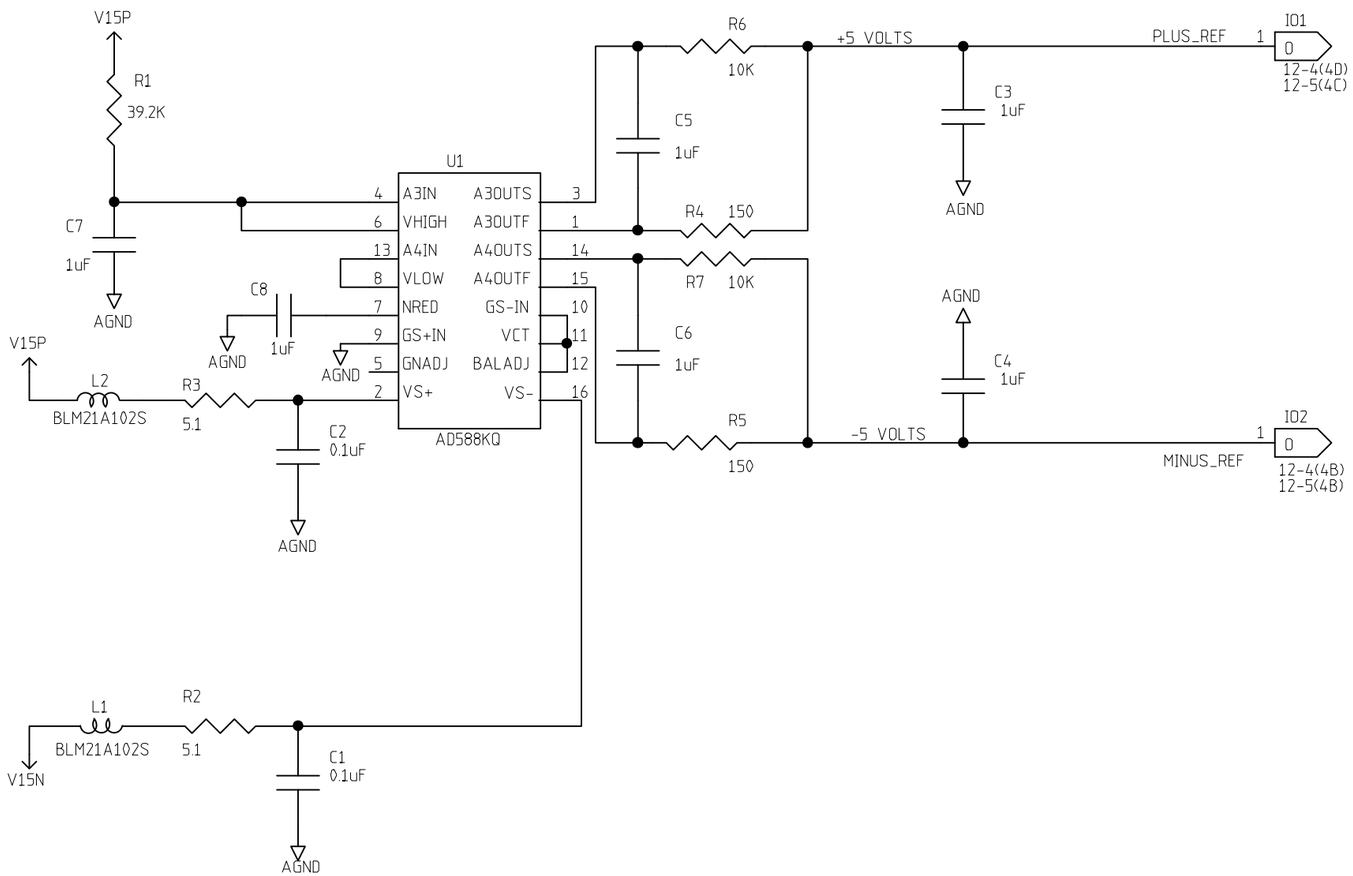

	NAME	DATE
ORIGINATOR	MERLE HALDEMAN	12/01/98
DRAWN	BRUCE MERKEL	12/01/98
CHECKED	TOM CRENNA	1/8/99
APPROVED		

FERMILAB PPD/ ETT/ ES CDMS(E-891)
ZIP MODULE
DAC PRECISION REFERENCE

SIZE	FSCM NO.	DWG. NO.	REV
B			

SCALE | SHEET 12-3

REVISIONS			
REV	DESCRIPTION	DATE	APPROVED
0	USE FOR BOTH 10 & 5 VOLT REFERENCE	3/23/99	B. MERKEL

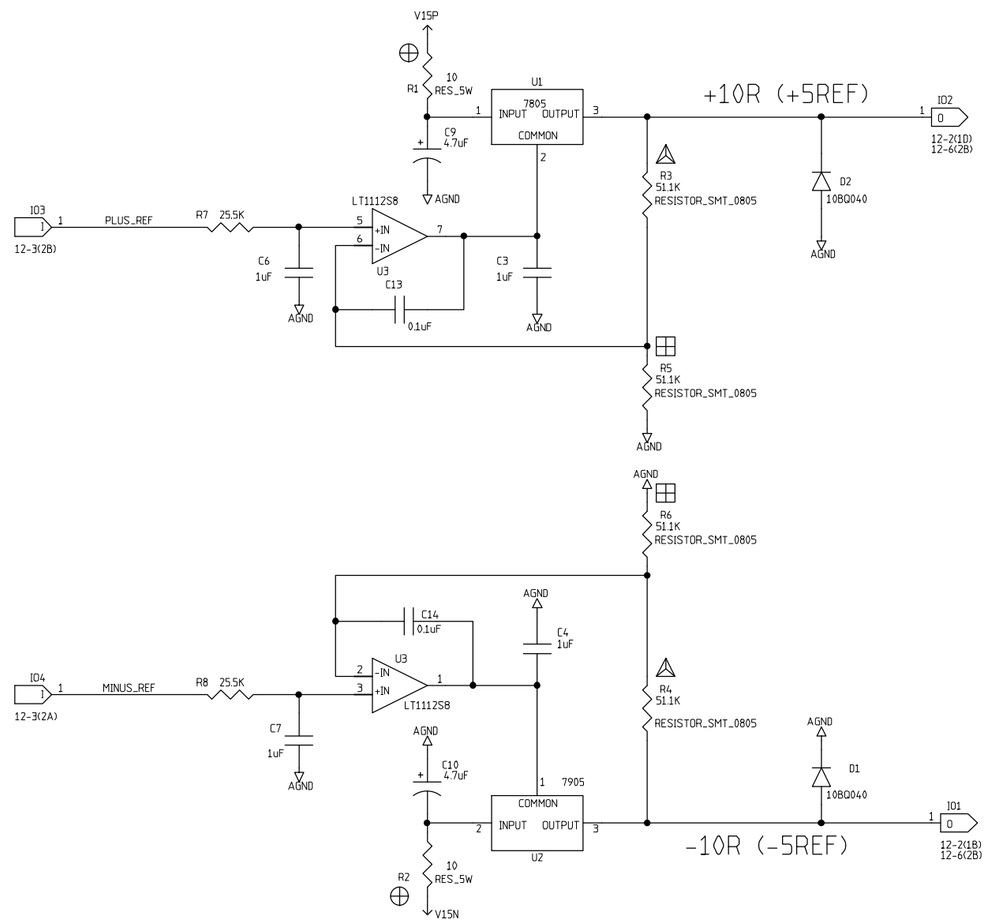

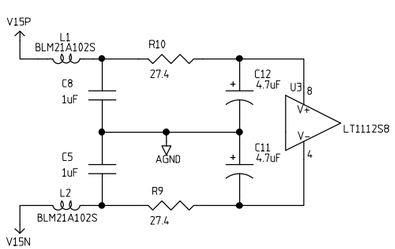

ALL VALUES SHOWN FOR

10 VOLT REFERENCE

USE VALUES BELOW FOR

5 VOLT REFERENCE

⊕ 240 OHM 5W RESISTOR
△ 25.5K OHM RESISTOR
⊞ RESISTOR NOT INSTALLED

	NAME	DATE
ORIGINATOR	MERLE HALDEMAN	12/01/98
DRAWN	BRUCE MERKEL	12/01/98
CHECKED	TOM CRENNA	1/8/99
APPROVED		

FERMILAB PPD/ ETT/ ES CDMS(E-891)
ZIP MODULE
DAC +/- VOLTAGE REFERENCES

SIZE	FSCM NO.	DWG. NO.	REV
C			
SCALE		SHEET 12-4	

REVISIONS			
REV	DESCRIPTION	DATE	APPROVED
0	UNDER DEVELOPMENT	1-19-99	

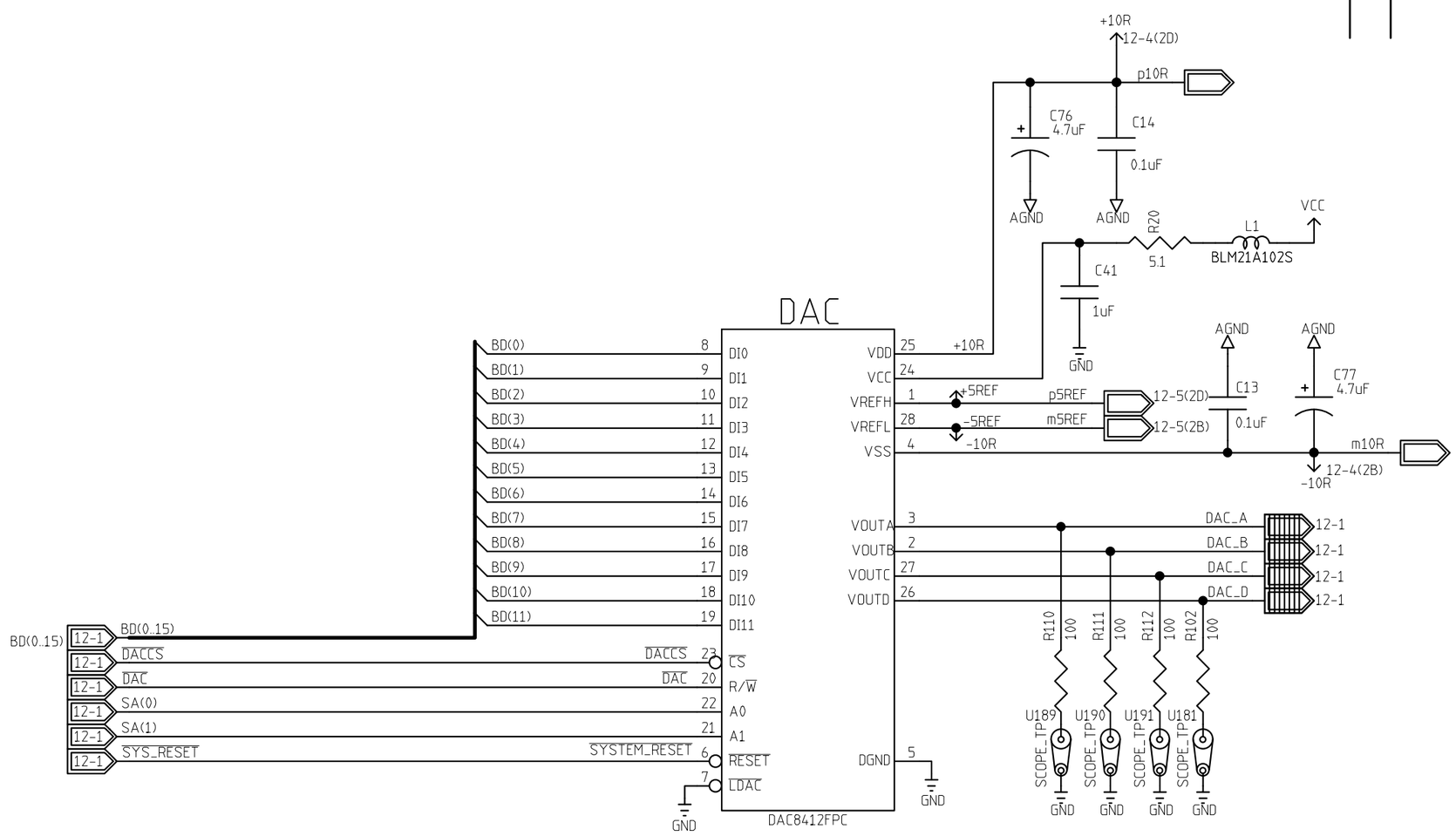

	NAME	DATE
ORIGINATOR	MERLE HALDEMAN	11/17/98
DRAWN	BRUCE MERKEL	11/17/98
CHECKED	TOM CRENNA	1/8/99
APPROVED		

FERMILAB PPD/ ETT/ ES CDMS(E-891)
ZIP MODULE
U31 DAC'S_1_TO_7

SIZE	FSCM NO.	DWG. NO.	REV
B			
SCALE		SHEET 12-6	

REVISIONS			
REV	DESCRIPTION	DATE	APPROVED
0	UNDER DEVELOPMENT	1-19-99	

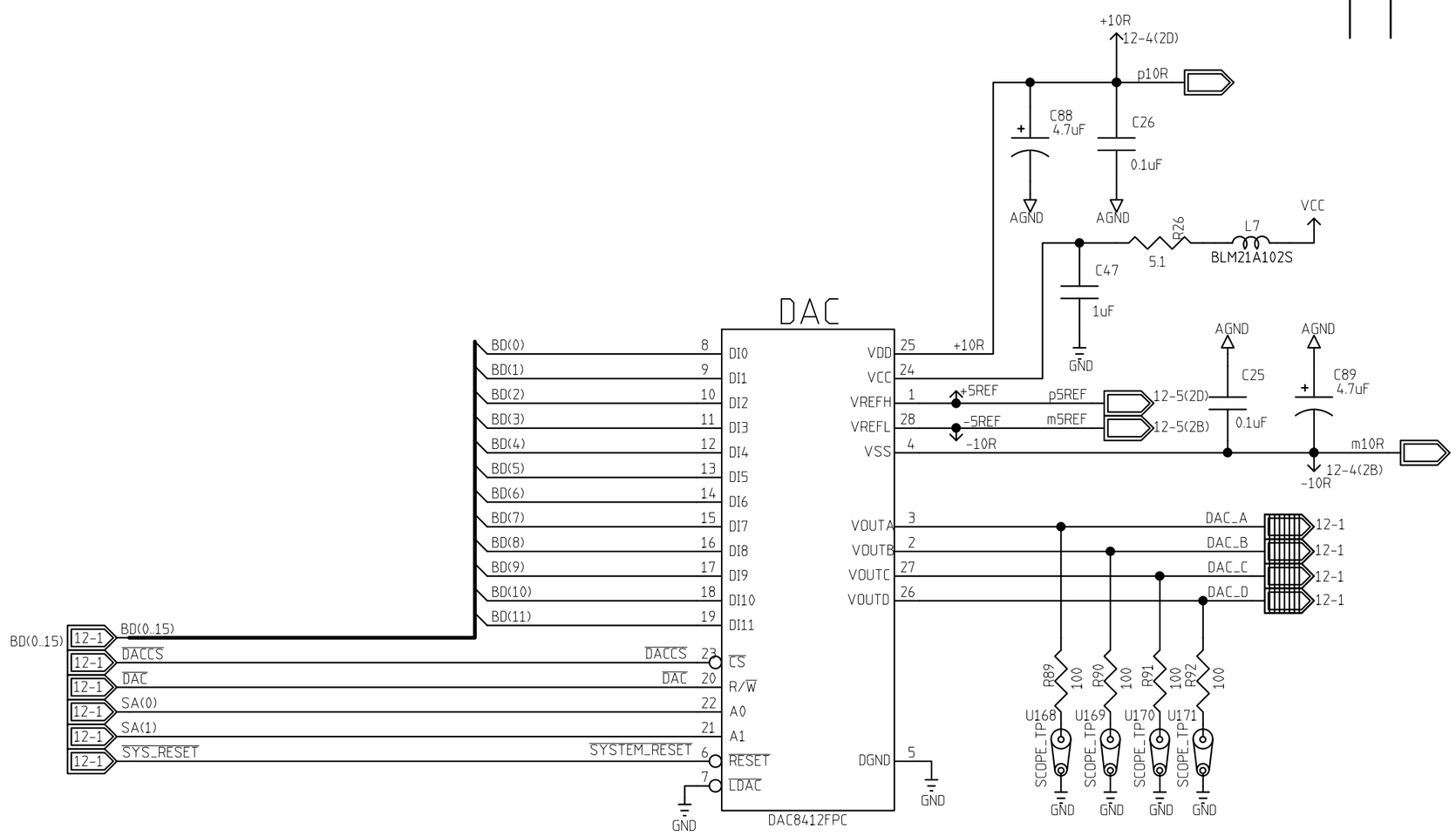

	NAME	DATE
ORIGINATOR	MERLE HALDEMAN	11/17/98
DRAWN	BRUCE MERKEL	11/17/98
CHECKED	TOM CRENNA	1/8/99
APPROVED		

FERMILAB PPD/ ETT/ ES CDMS(E-891)
ZIP MODULE
U32 DAC'S_1_TO_7

SIZE	FSCM NO.	DWG. NO.	REV
B			

SCALE | SHEET 12-6

REVISIONS			
REV	DESCRIPTION	DATE	APPROVED
0	UNDER DEVELOPMENT	1-19-99	

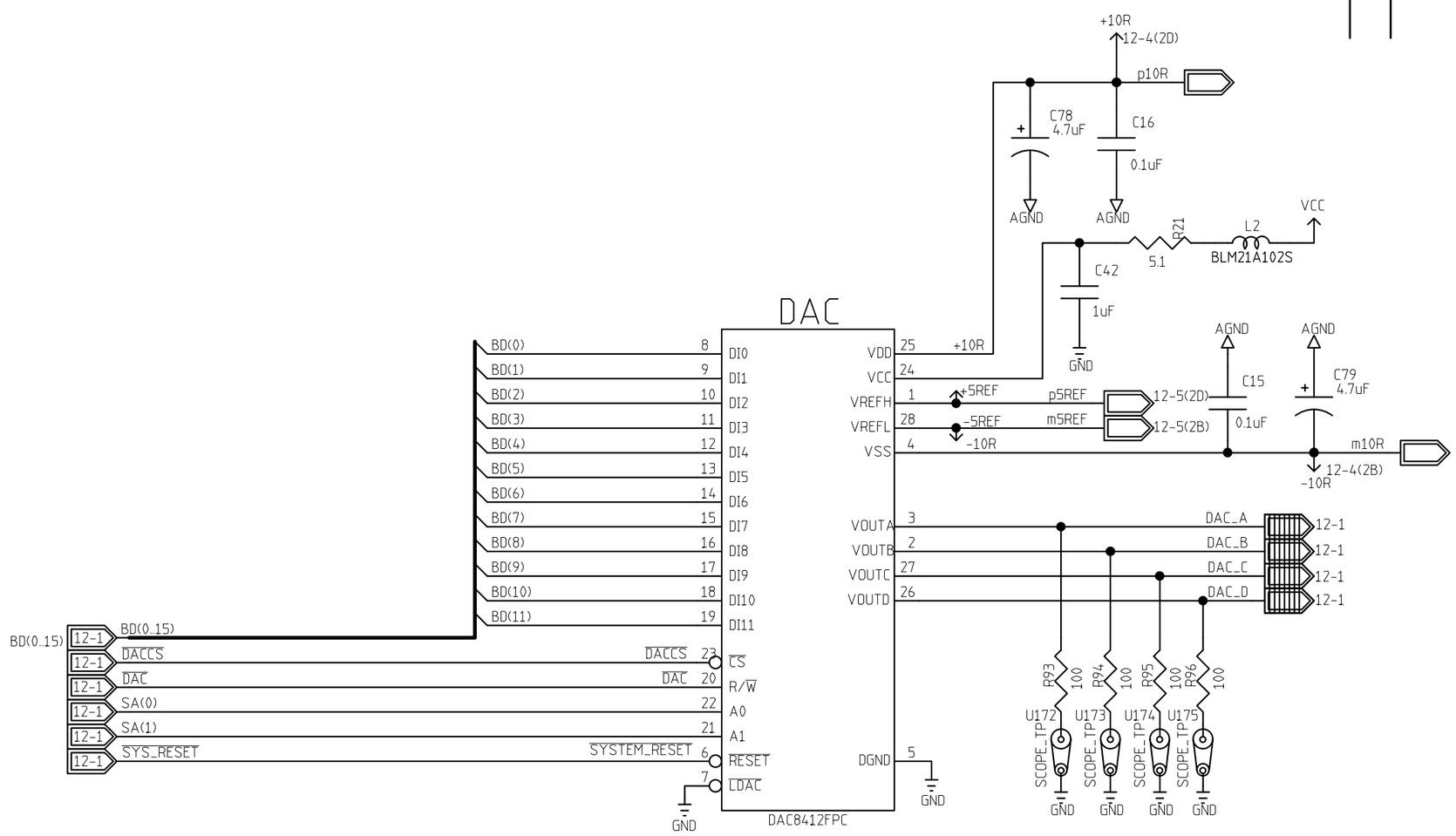

	NAME	DATE
ORIGINATOR	MERLE HALDEMAN	11/17/98
DRAWN	BRUCE MERKEL	11/17/98
CHECKED	TOM CRENNA	1/8/99
APPROVED		

FERMILAB PPD/ ETT/ ES CDMS(E-891)
ZIP MODULE
U33 DAC'S_1_TO_7

SIZE	FSCM NO.	DWG. NO.	REV
B			
SCALE		SHEET 12-6	

REVISIONS			
REV	DESCRIPTION	DATE	APPROVED
0	UNDER DEVELOPMENT	1-19-99	

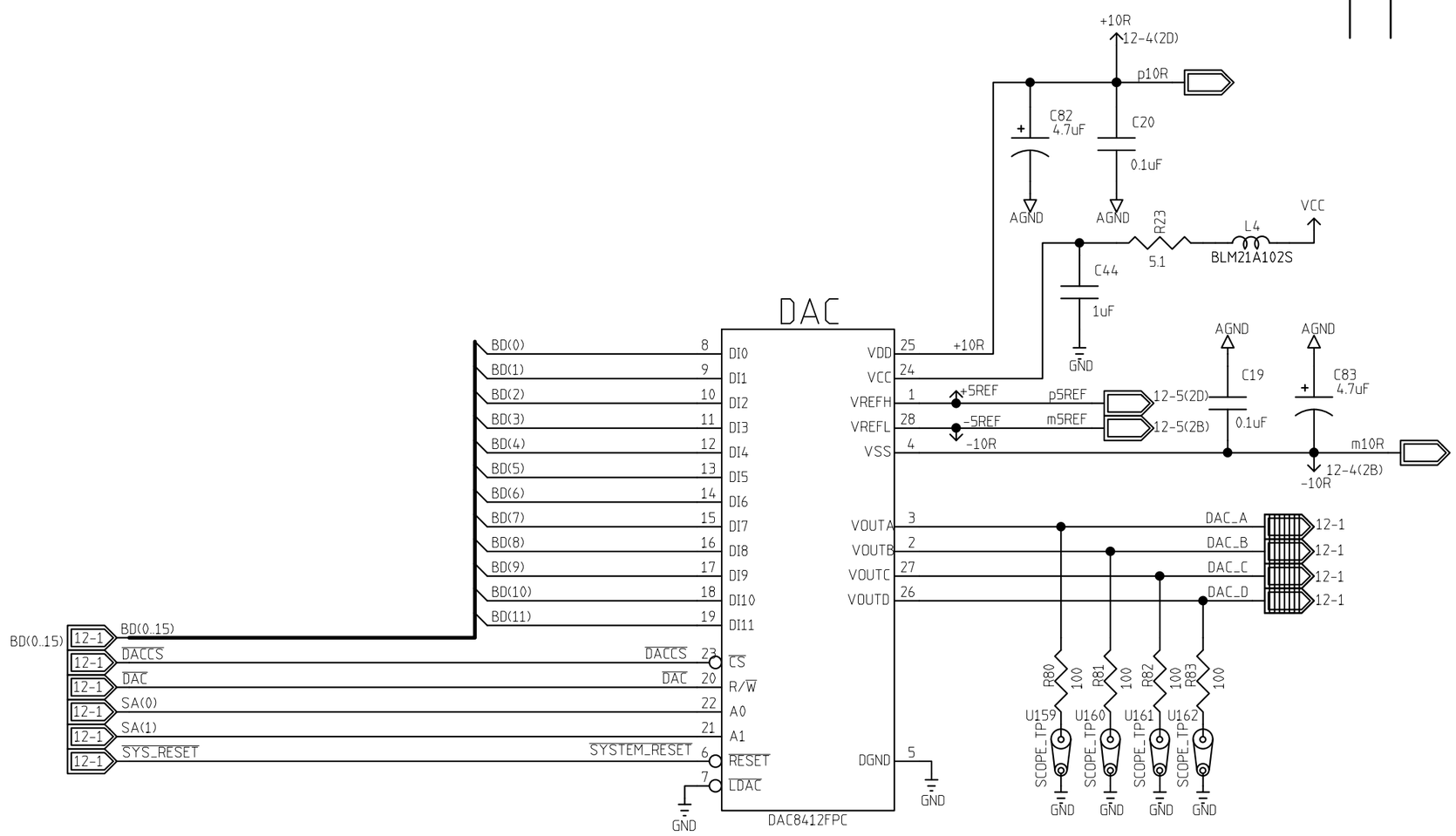

	NAME	DATE
ORIGINATOR	MERLE HALDEMAN	11/17/98
DRAWN	BRUCE MERKEL	11/17/98
CHECKED	TOM CRENNA	1/8/99
APPROVED		

FERMILAB PPD/ ETT/ ES CDMS(E-891)
ZIP MODULE
U34 DAC'S_1_TO_7

SIZE	FSCM NO.	DWG. NO.	REV
B			
SCALE		SHEET 12-6	

REVISIONS			
REV	DESCRIPTION	DATE	APPROVED
0	UNDER DEVELOPMENT	1-19-99	

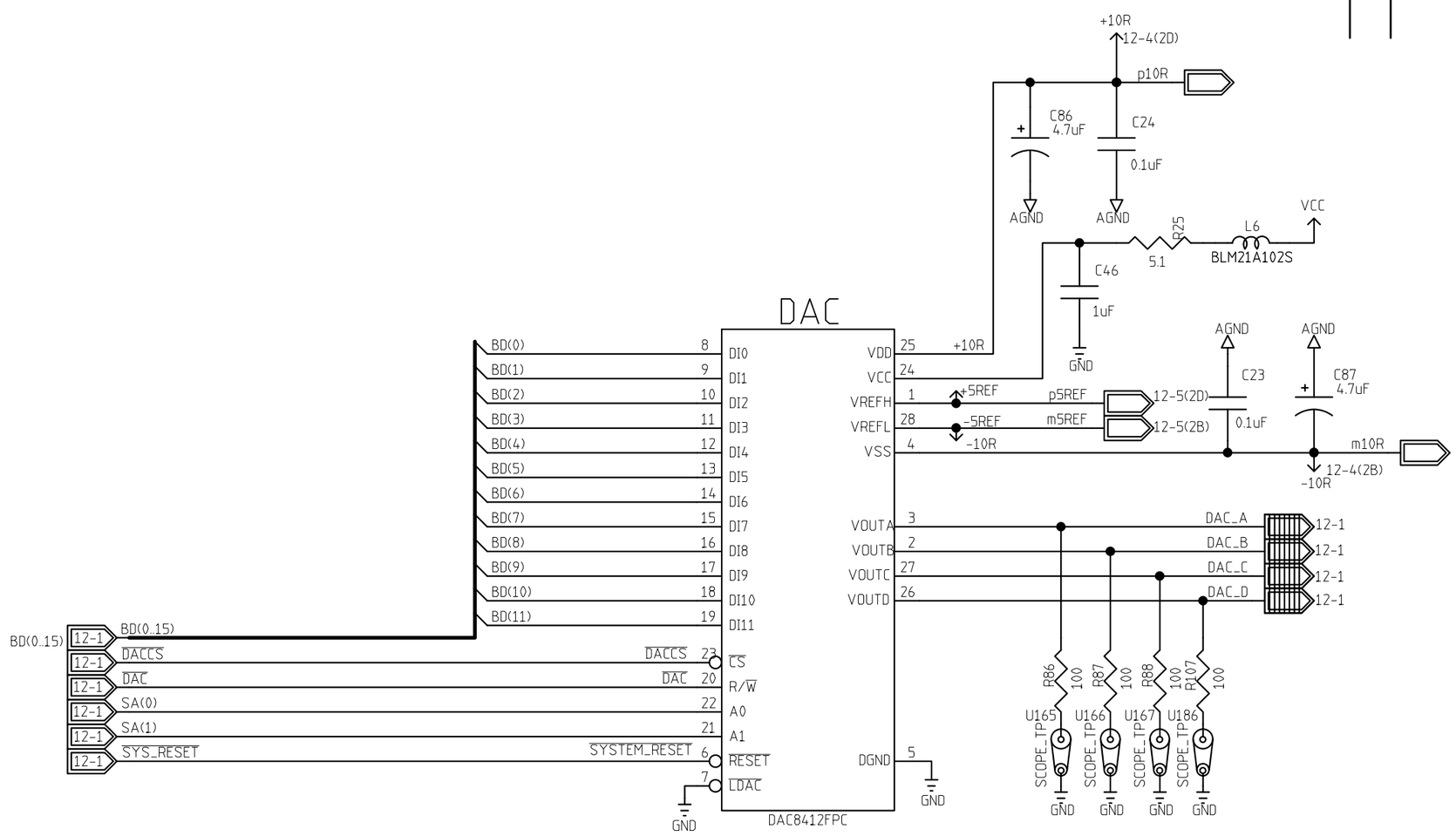

	NAME	DATE
ORIGINATOR	MERLE HALDEMAN	11/17/98
DRAWN	BRUCE MERKEL	11/17/98
CHECKED	TOM CRENNA	1/8/99
APPROVED		

FERMILAB PPD/ ETT/ ES CDMS(E-891)
ZIP MODULE
U35 DAC'S_1_TO_7

SIZE	FSCM NO.	DWG. NO.	REV
B			
SCALE		SHEET 12-6	

REVISIONS			
REV	DESCRIPTION	DATE	APPROVED
0	UNDER DEVELOPMENT	1-19-99	

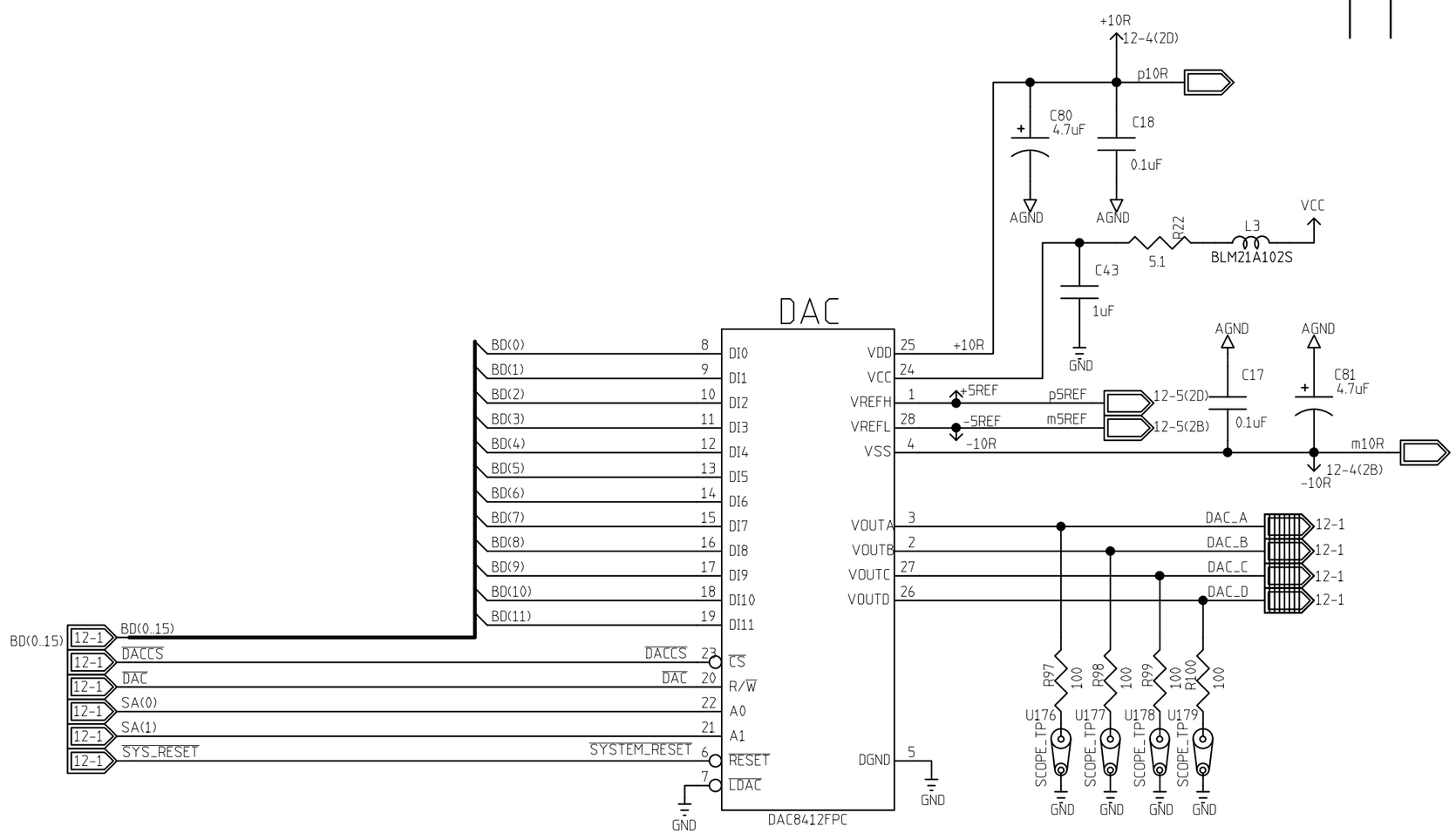

	NAME	DATE
ORIGINATOR	MERLE HALDEMAN	11/17/98
DRAWN	BRUCE MERKEL	11/17/98
CHECKED	TOM CRENNA	1/8/99
APPROVED		

FERMILAB PPD/ ETT/ ES CDMS(E-891)
ZIP MODULE
U36 DAC'S_1_TO_7

SIZE	FSCM NO.	DWG. NO.	REV
B			
SCALE		SHEET 12-6	

REVISIONS			
REV	DESCRIPTION	DATE	APPROVED
0	UNDER DEVELOPMENT	1-19-99	

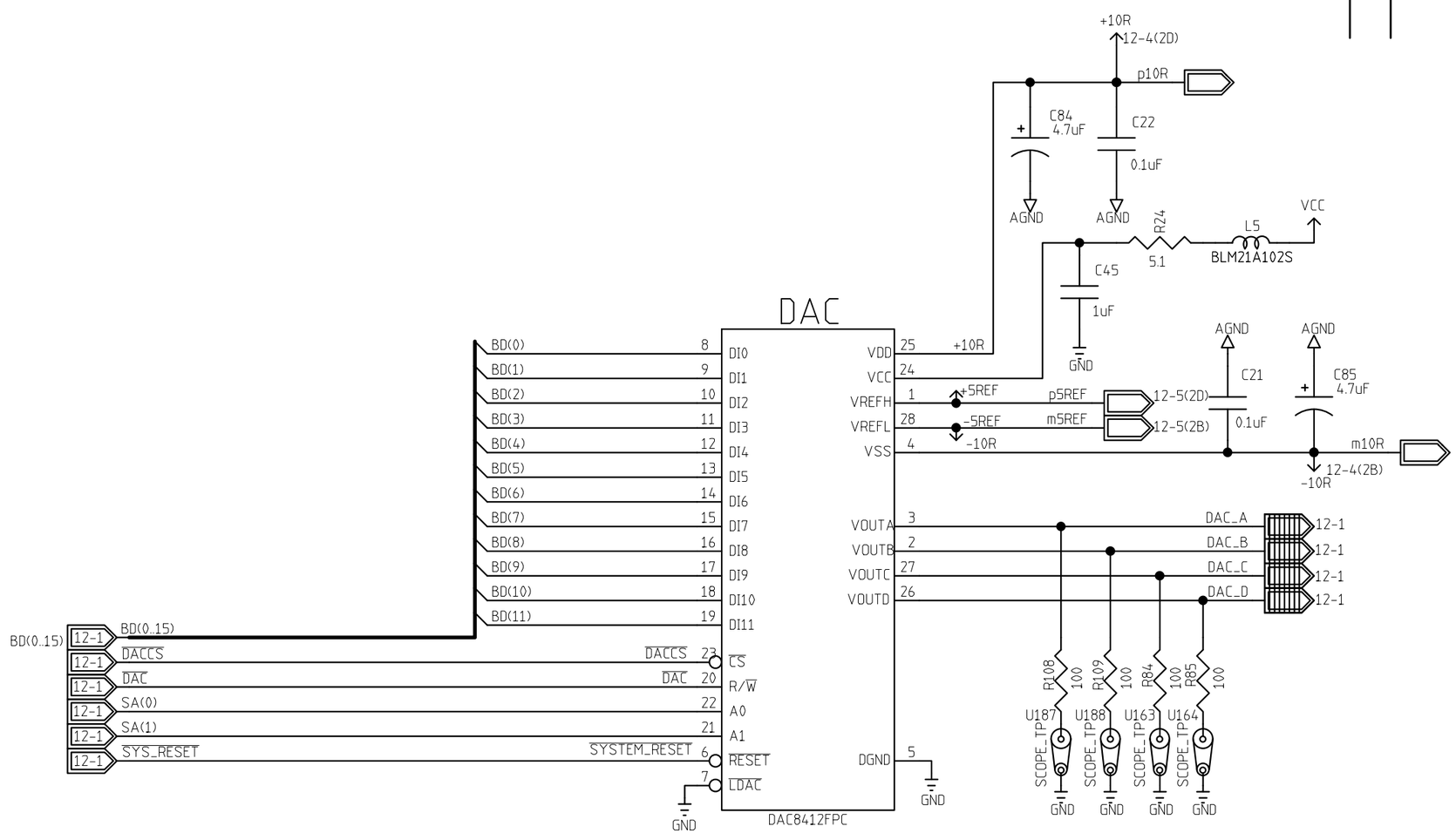

	NAME	DATE
ORIGINATOR	MERLE HALDEMAN	11/17/98
DRAWN	BRUCE MERKEL	11/17/98
CHECKED	TOM CRENNA	1/8/99
APPROVED		

FERMILAB PPD/ ETT/ ES CDMS(E-891)
ZIP MODULE
U37 DAC'S_1_TO_7

SIZE	FSCM NO.	DWG. NO.	REV
B			
SCALE		SHEET 12-6	

REVISIONS			
REV	DESCRIPTION	DATE	APPROVED

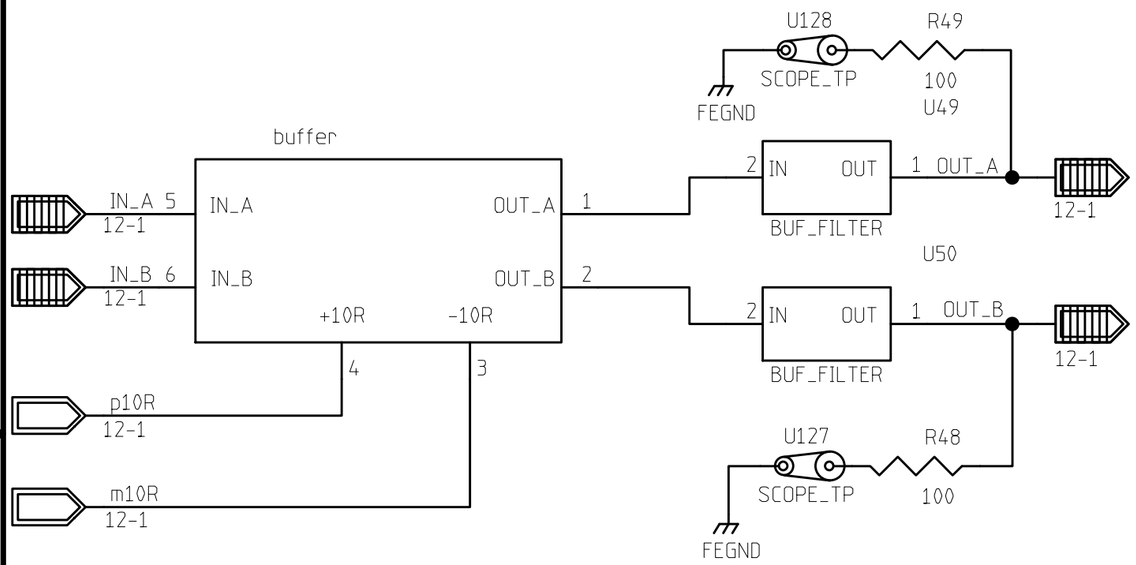

	NAME	DATE
ORIGINATOR	MERLE HALDEMAN	11/17/98
DRAWN	BRUCE MERKEL	12/10/98
CHECKED	TOM CRENNA	1/8/99
APPROVED		

FERMILAB PPD/ETT/ES CDMS (E-891)
ZIP MODULE
U38 DUAL NON_INVERTING BUFFER BLOCK

SIZE	FSCM NO.	DWG. NO.	REV
A			

SCALE | SHEET 12-7

REVISIONS			
REV	DESCRIPTION	DATE	APPROVED

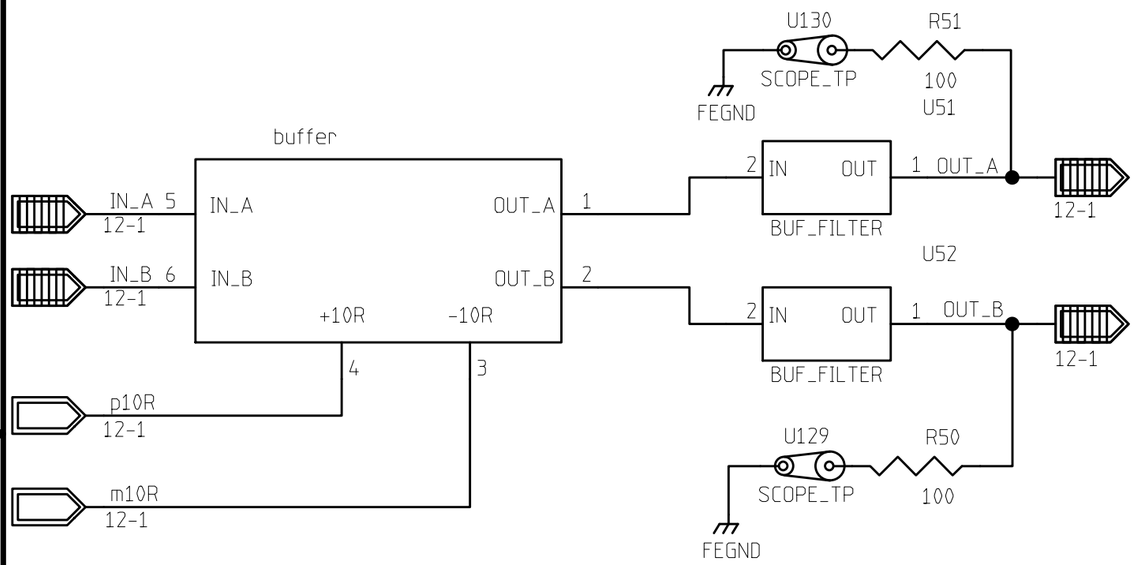

	NAME	DATE
ORIGINATOR	MERLE HALDEMAN	11/17/98
DRAWN	BRUCE MERKEL	12/10/98
CHECKED	TOM CRENNA	1/8/99
APPROVED		

FERMILAB PPD/ETT/ES CDMS (E-891)
ZIP MODULE
U39 DUAL NON_INVERTING BUFFER BLOCK

SIZE	FSCM NO.	DWG. NO.	REV
A			

SCALE | SHEET 12-7

REVISIONS			
REV	DESCRIPTION	DATE	APPROVED

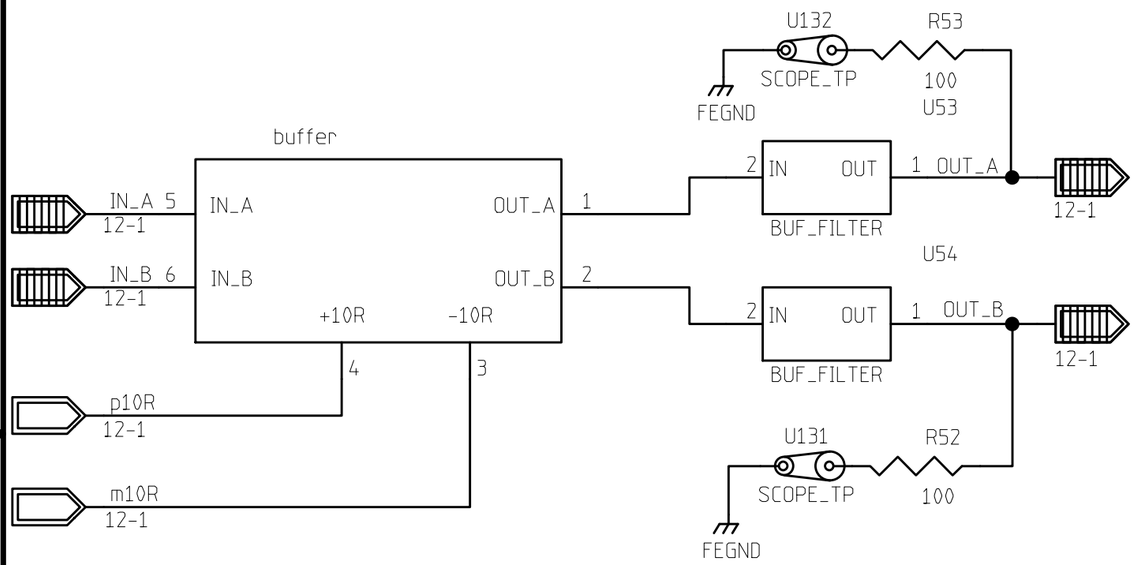

	NAME	DATE
ORIGINATOR	MERLE HALDEMAN	11/17/98
DRAWN	BRUCE MERKEL	12/10/98
CHECKED	TOM CRENNA	1/8/99
APPROVED		

FERMILAB PPD/ETT/ES CDMS (E-891)
ZIP MODULE
U40 DUAL NON_INVERTING BUFFER BLOCK

SIZE	FSCM NO.	DWG. NO.	REV
A			

SCALE | SHEET 12-7

REVISIONS			
REV	DESCRIPTION	DATE	APPROVED

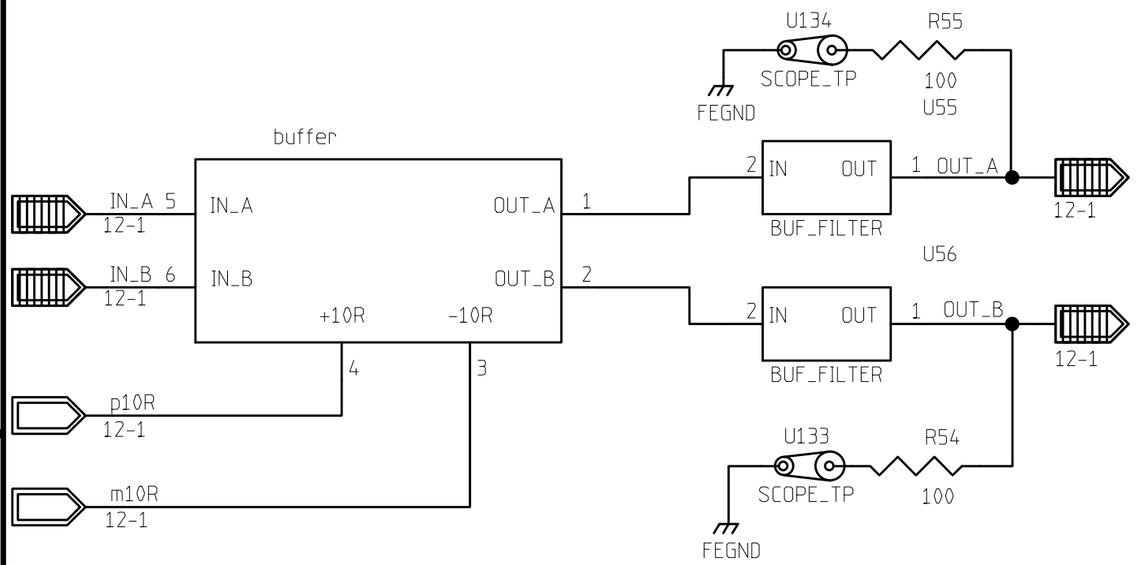

	NAME	DATE
ORIGINATOR	MERLE HALDEMAN	11/17/98
DRAWN	BRUCE MERKEL	12/10/98
CHECKED	TOM CRENNA	1/8/99
APPROVED		

FERMILAB PPD/ETT/ES CDMS (E-891)
ZIP MODULE
U41 DUAL NON_INVERTING BUFFER BLOCK

SIZE	FSCM NO.	DWG. NO.	REV
A			

SCALE | SHEET 12-7

REVISIONS			
REV	DESCRIPTION	DATE	APPROVED

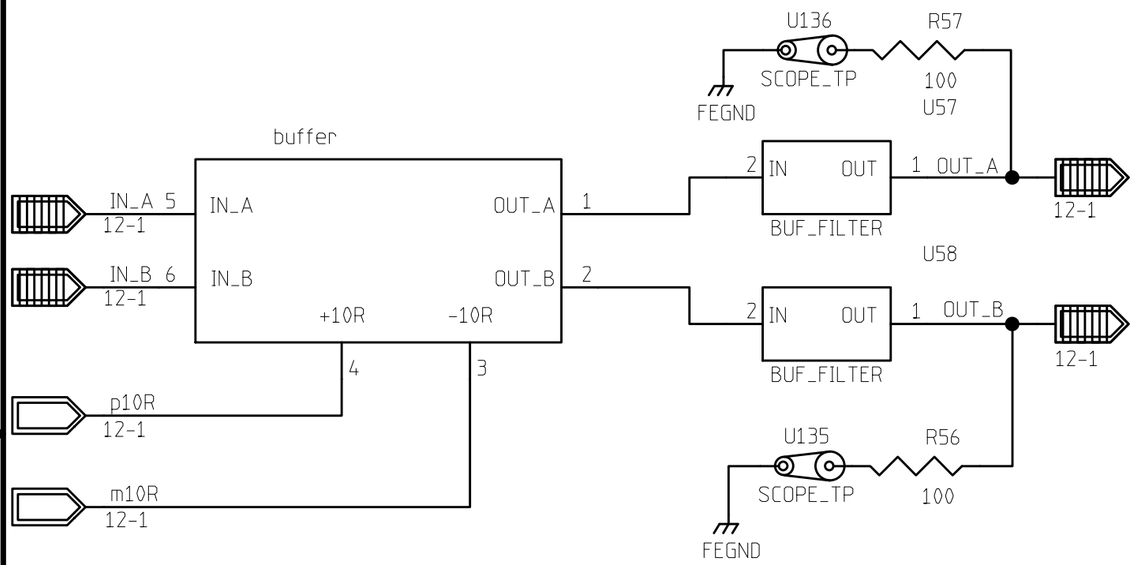

	NAME	DATE
ORIGINATOR	MERLE HALDEMAN	11/17/98
DRAWN	BRUCE MERKEL	12/10/98
CHECKED	TOM CRENNA	1/8/99
APPROVED		

FERMILAB PPD/ETT/ES CDMS (E-891)
ZIP MODULE
U42 DUAL NON_INVERTING BUFFER BLOCK

SIZE	FSCM NO.	DWG. NO.	REV
A			

SCALE | SHEET 12-7

REVISIONS			
REV	DESCRIPTION	DATE	APPROVED

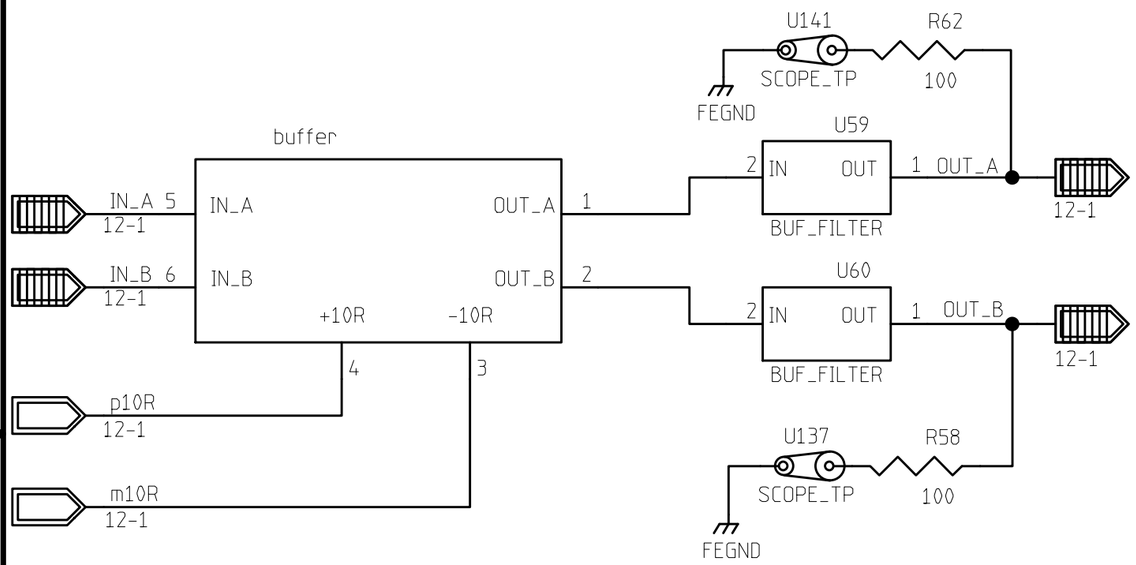

	NAME	DATE
ORIGINATOR	MERLE HALDEMAN	11/17/98
DRAWN	BRUCE MERKEL	12/10/98
CHECKED	TOM CRENNA	1/8/99
APPROVED		

FERMILAB PPD/ETT/ES CDMS (E-891)
ZIP MODULE
U43 DUAL NON_INVERTING BUFFER BLOCK

SIZE	FSCM NO.	DWG. NO.	REV
A			

SCALE | SHEET 12-7

REVISIONS			
REV	DESCRIPTION	DATE	APPROVED

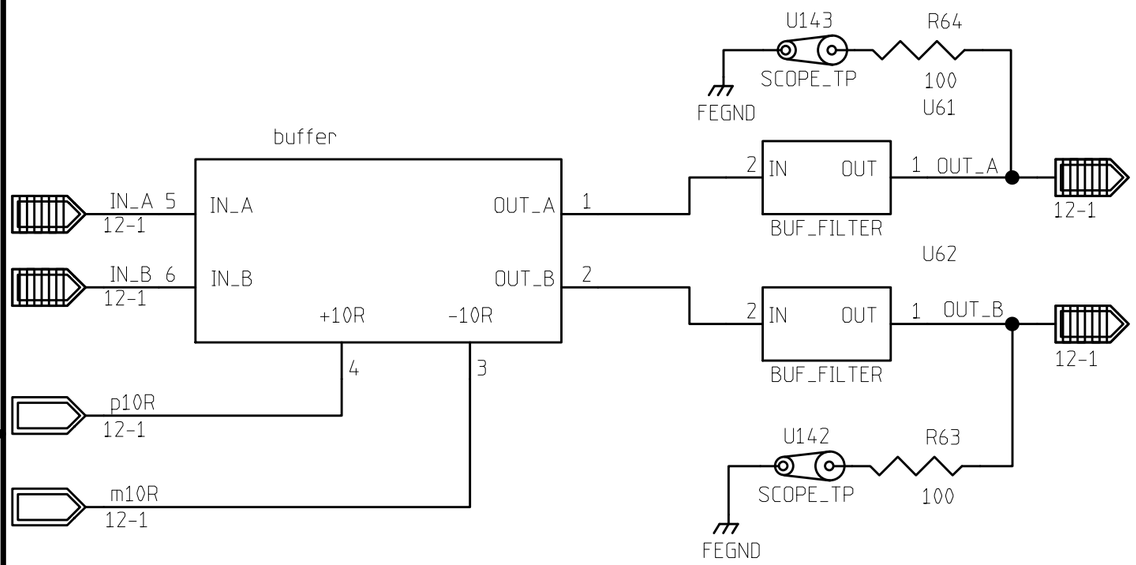

	NAME	DATE
ORIGINATOR	MERLE HALDEMAN	11/17/98
DRAWN	BRUCE MERKEL	12/10/98
CHECKED	TOM CRENNA	1/8/99
APPROVED		

FERMILAB PPD/ETT/ES CDMS (E-891)
ZIP MODULE
U44 DUAL NON_INVERTING BUFFER BLOCK

SIZE	FSCM NO.	DWG. NO.	REV
A			

SCALE | SHEET 12-7

REVISIONS			
REV	DESCRIPTION	DATE	APPROVED

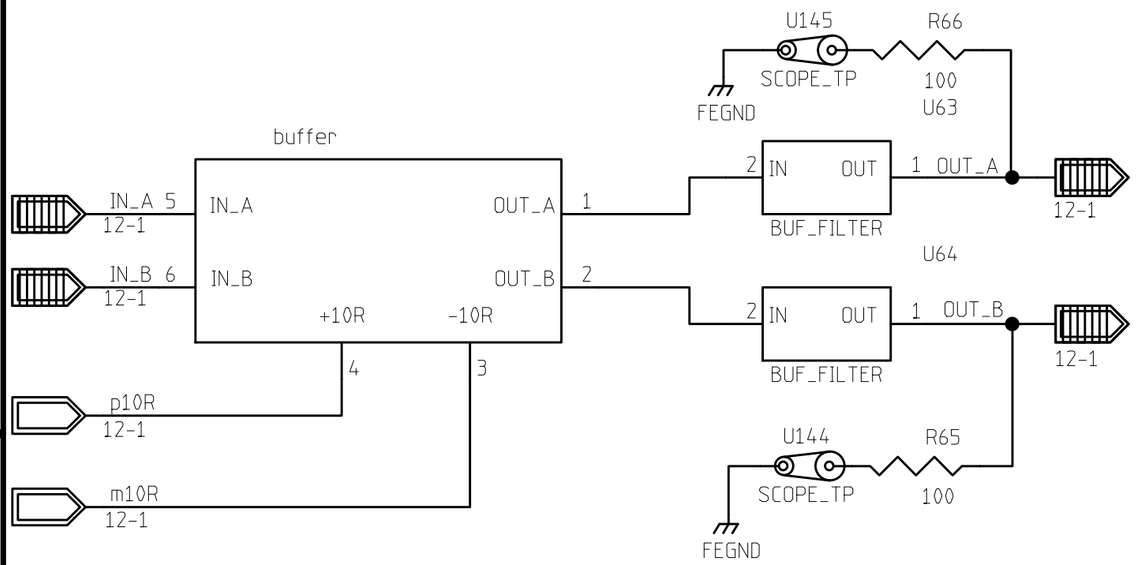

	NAME	DATE
ORIGINATOR	MERLE HALDEMAN	11/17/98
DRAWN	BRUCE MERKEL	12/10/98
CHECKED	TOM CRENNA	1/8/99
APPROVED		

FERMILAB PPD/ETT/ES CDMS (E-891)
ZIP MODULE
U45 DUAL NON_INVERTING BUFFER BLOCK

SIZE	FSCM NO.	DWG. NO.	REV
A			

SCALE | SHEET 12-7

REVISIONS			
REV	DESCRIPTION	DATE	APPROVED

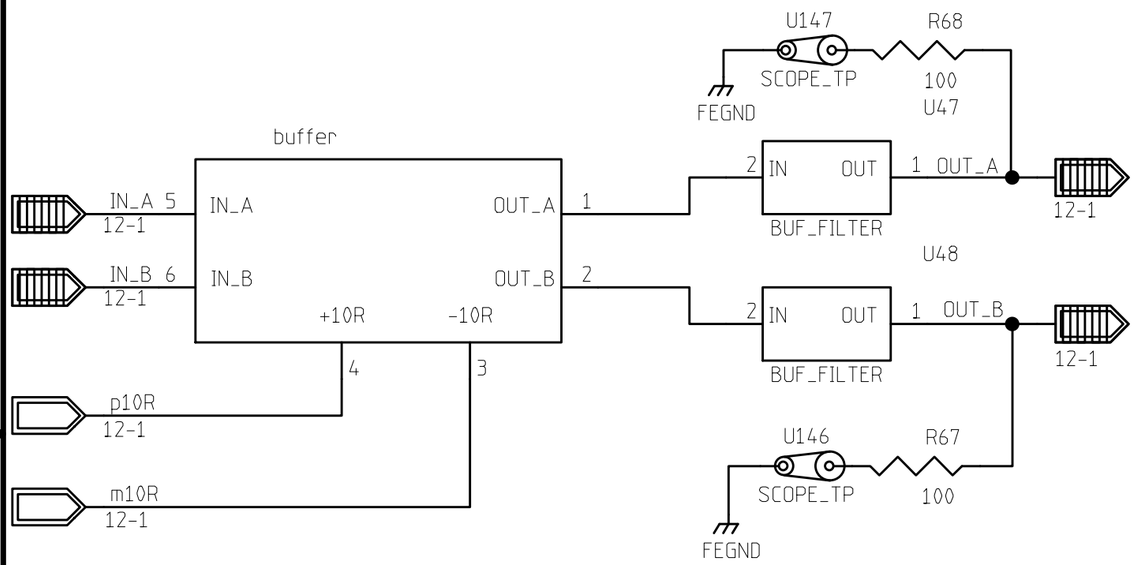

	NAME	DATE
ORIGINATOR	MERLE HALDEMAN	11/17/98
DRAWN	BRUCE MERKEL	12/10/98
CHECKED	TOM CRENNA	1/8/99
APPROVED		

FERMILAB PPD/ETT/ES CDMS (E-891)
ZIP MODULE
U46 DUAL NON_INVERTING BUFFER BLOCK

SIZE	FSCM NO.	DWG. NO.	REV
A			

SCALE | SHEET 12-7

REVISIONS			
REV	DESCRIPTION	DATE	APPROVED

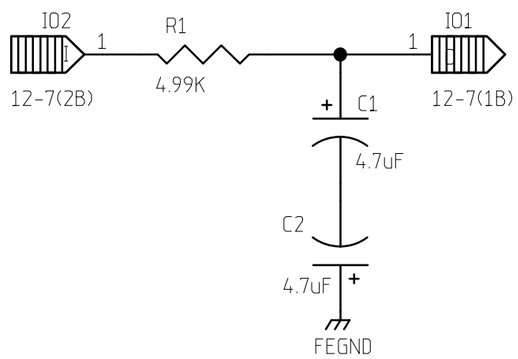

	NAME	DATE
ORIGINATOR	MERLE HALDEMAN	12/09/98
DRAWN	BRUCE MERKEL	12/09/98
CHECKED	TOM CRENNA	1/8/99
APPROVED		

FERMILAB PPD/ETT/ES CDMS (E-891)
ZIP MODULE
BUFFER FILTER

SIZE	FSCM NO.	DWG. NO.	REV
A			

SCALE		SHEET 12-9

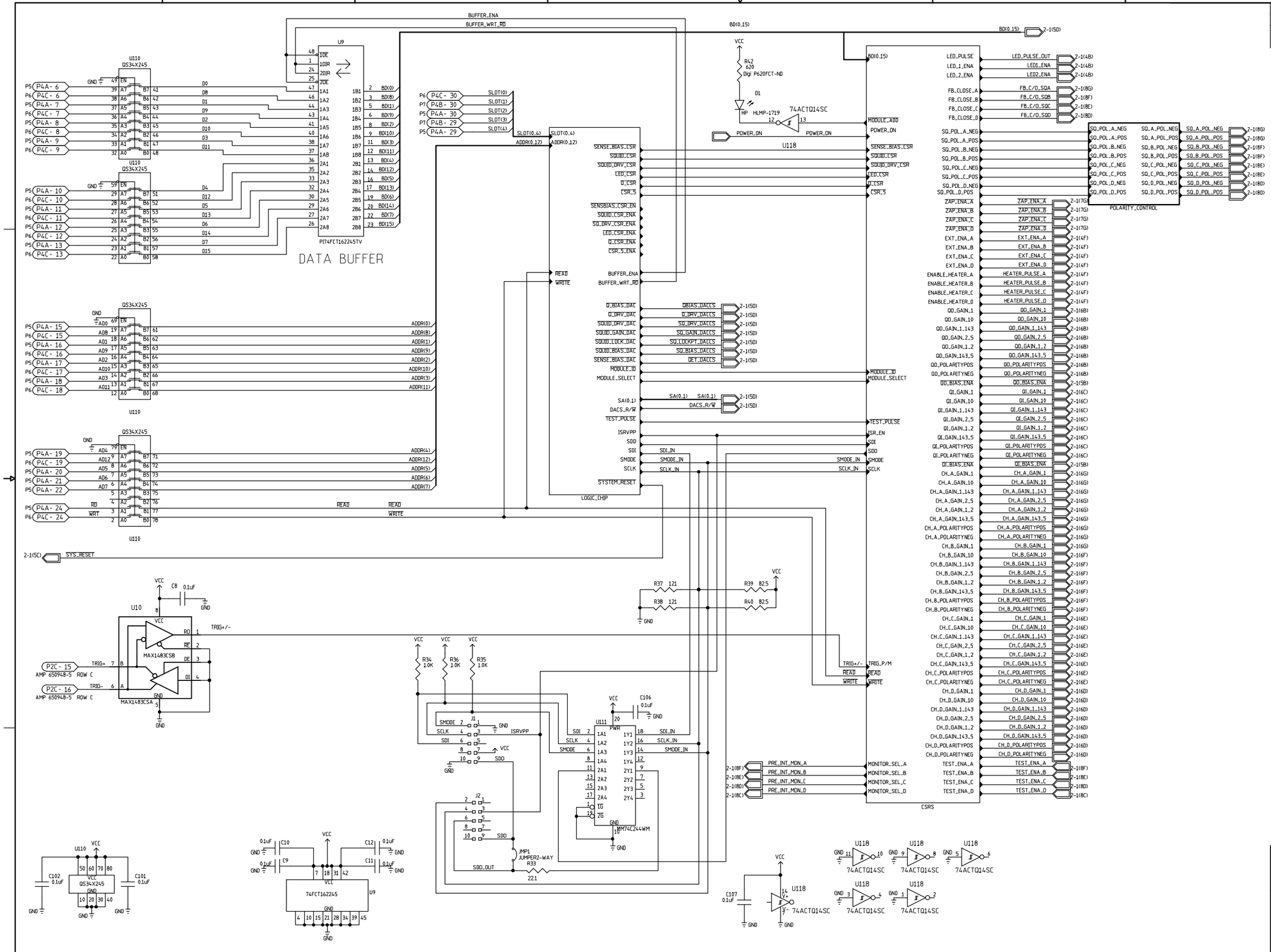

REVISIONS			
REV	DESCRIPTION	DATE	APPROVED

	NAME	DATE
ORIGINATOR	MERLE HALDEMAN	11/18/98
DRAWN	BRUCE MERKEL	11/18/98
CHECKED	TOM CRENNA	12/9/98
APPROVED		

FERMILAB PPD/ EET/ ES CDMS(E-891)
ZIP MODULE
LOGIC BLOCK DIAGRAM

SIZE	FSCM NO.	DWG. NO.	REV
D			
SCALE		SHEET 13-1	

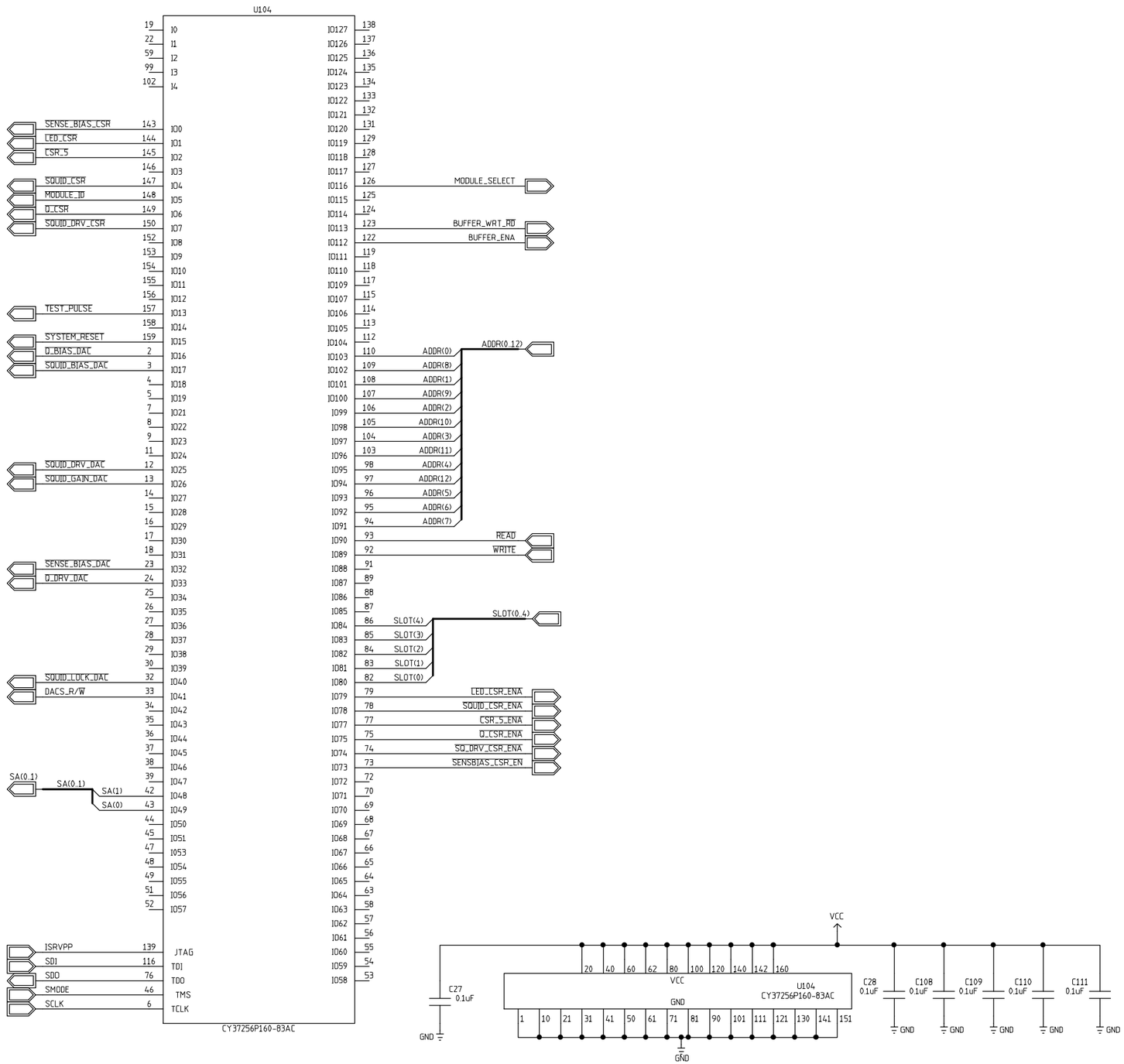

REVISIONS			
REV	DESCRIPTION	DATE	APPROVED

	NAME	DATE
ORIGINATOR	MERLE HALDEMAN	11/18/98
DRAWN	BRUCE MERKEL	11/18/98
CHECKED	TOM CRENNA	1/8/99
APPROVED		

FERMILAB PPD/ EET/ ES CDMS(E-891)
ZIP MODULE
CONTROL LOGIC

SIZE	FSCM NO.	DWG. NO.	REV
C			
SCALE		SHEET 13-3	

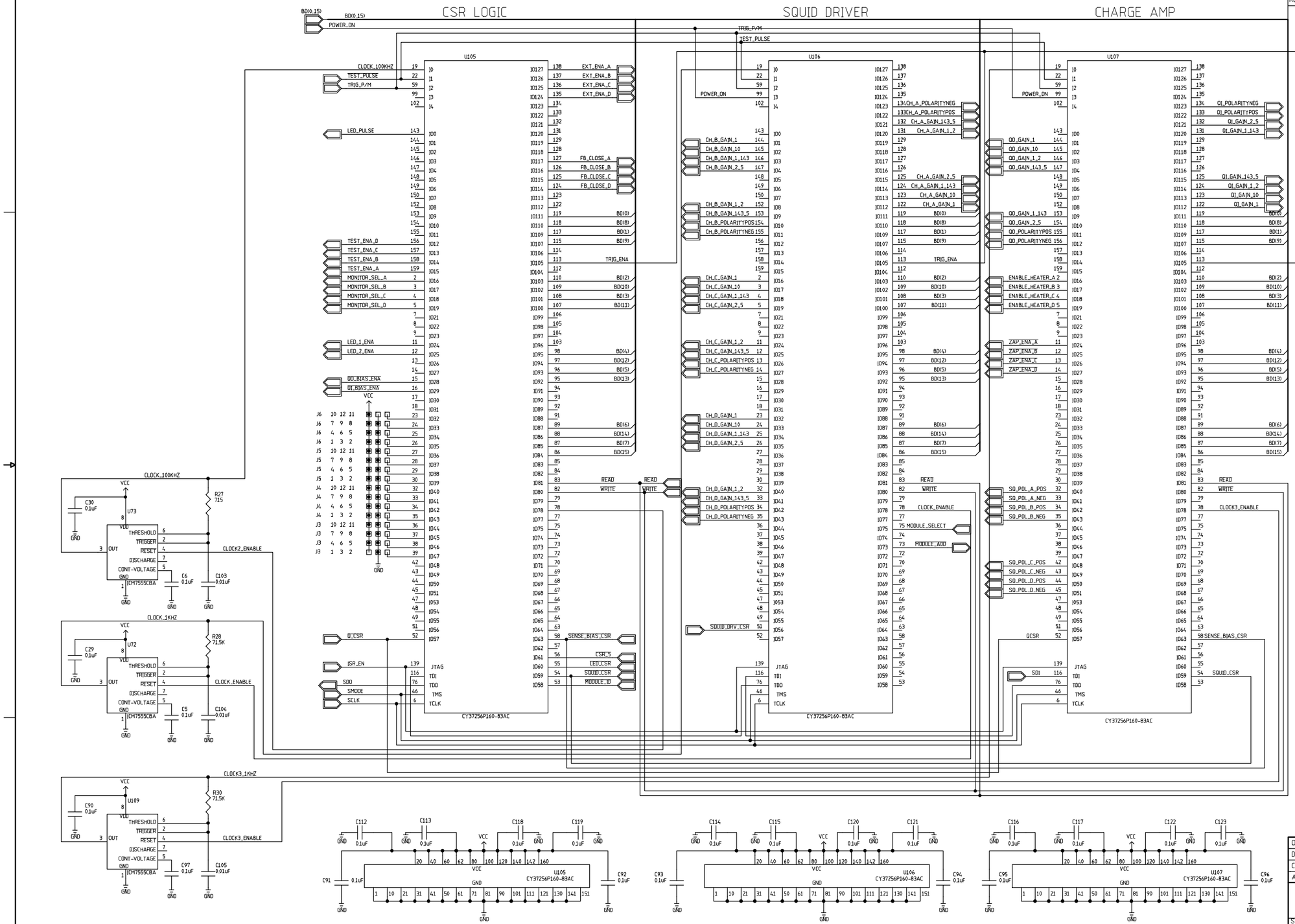

REVISIONS			
REV	DESCRIPTION	DATE	APPROVED

	NAME	DATE
ORIGINATOR	MERLE HALDEMAN	11/18/98
DRAWN	BRUCE MERKEL	11/18/98
CHECKED	TOM CRENNA	12/9/98
APPROVED		

FERMILAB PPD/ EET/ ES CDMS(E-891)
ZIP MODULE
CSR LOGIC

SIZE D | FSCM NO. | DWG. NO. | REV

SCALE | SHEET 13-4

REVISIONS			
REV	DESCRIPTION	DATE	APPROVED
0	UNDER DEVELOPMENT	1-20-99	

11mSEC ONE SHOT

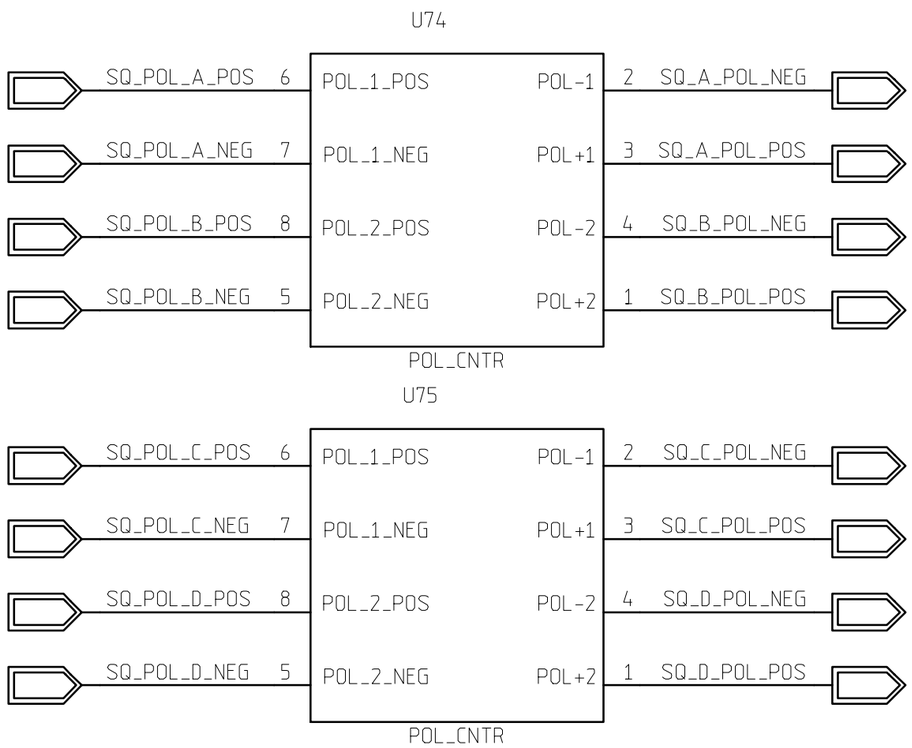

	NAME	DATE
ORIGINATOR	MERLE HALDEMAN	11/18/98
DRAWN	BRUCE MERKEL	11/18/98
CHECKED	TOM CRENNA	1/8/99
APPROVED		

FERMILAB PPD/ETT/ES CDMS (E-891)
ZIP MODULE
POLARITY CONTROL

SIZE	FSCM NO.	DWG. NO.	REV
A			

SCALE | SHEET 13-5

REVISIONS			
REV	DESCRIPTION	DATE	APPROVED
0	UNDER DEVELOPMENT	1-20-99	

11mSEC PULSE

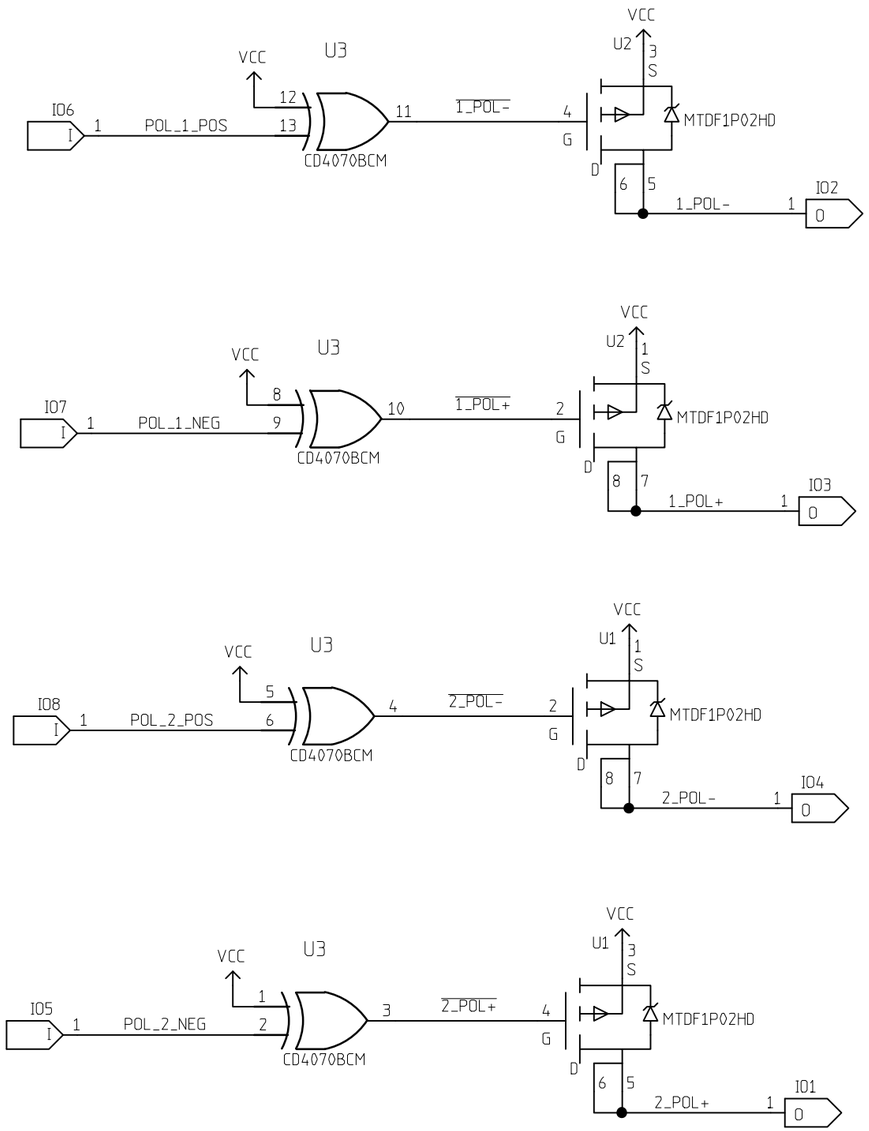

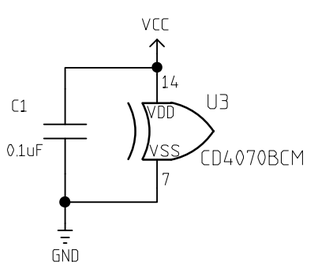

	NAME	DATE
ORIGINATOR	MERLE HALDEMAN	11/18/98
DRAWN	BRUCE MERKEL	11/18/98
CHECKED	TOM CRENNA	1/8/99
APPROVED		

FERMILAB PPD/ETT/ES CDMS (E-891)
ZIP MODULE
POLARITY CONTROL

SIZE	FSCM NO.	DWG. NO.	REV
B			
SCALE		SHEET 13-6	

DWG. NO.	SH.	REV

REVISIONS

REV	DESCRIPTION	DATE	APPROVED
0	UNDERDEVELOPMENT	1/19/99	

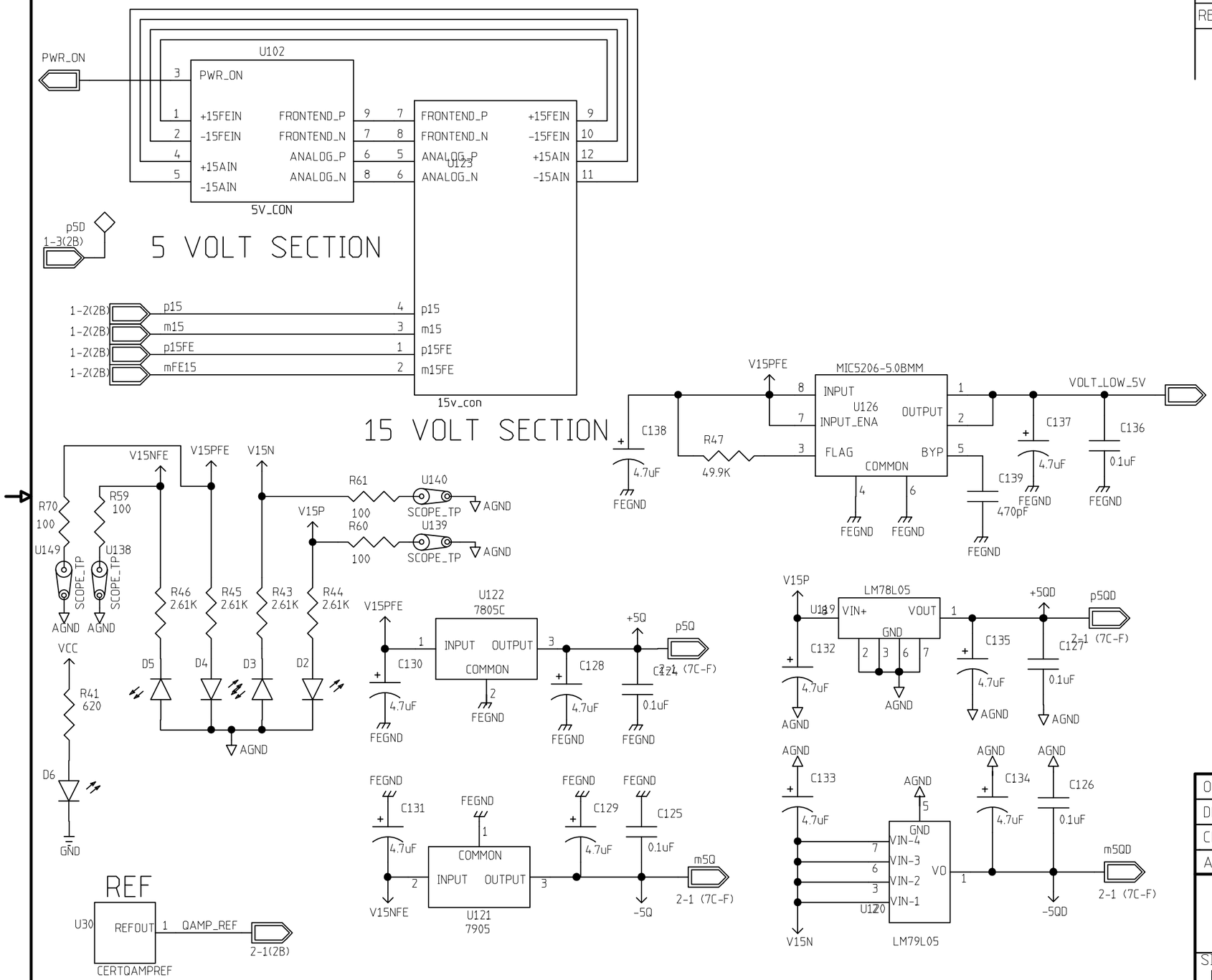

	NAME	DATE
ORIGINATOR	MERLE HALDEMAN	11/18/98
DRAWN	BRUCE MERKEL	11/18/98
CHECKED	TOM CRENNA	1/8/99
APPROVED		

FERMILAB PPD/ETT/ES CDMS (E-891
ZIP MODULE
POWER CONTROL

SIZE	FSCM NO.	DWG. NO.	REV
B			
SCALE		SHEET 14-1	

POWER ON SEQUENCER

REVISIONS			
REV	DESCRIPTION	DATE	APPROVED

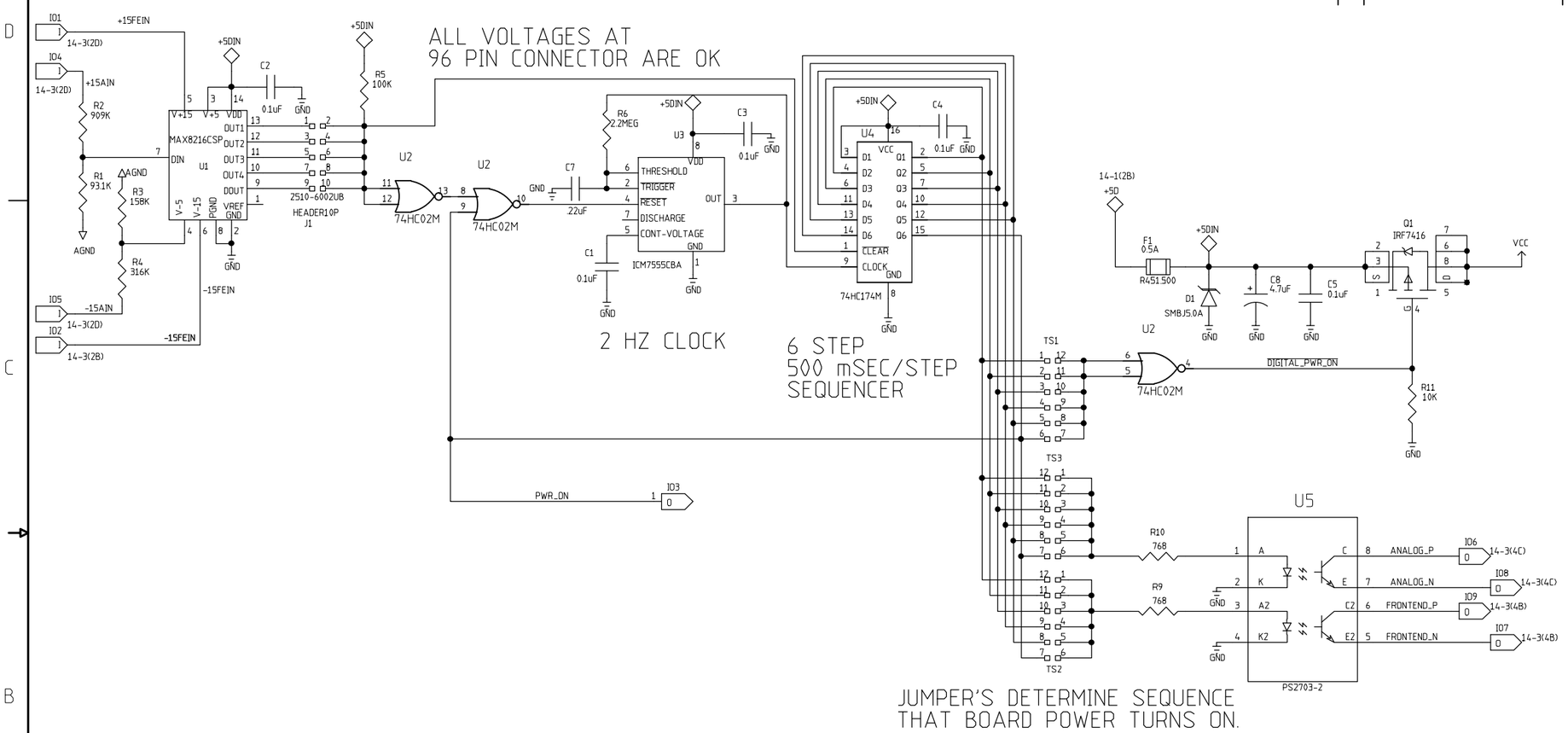

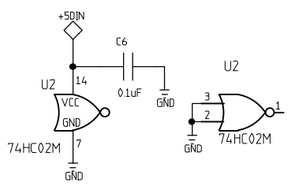

	NAME	DATE
ORIGINATOR	MERLE HALDEMAN	11/18/98
DRAWN	BRUCE MERKEL	11/18/98
CHECKED	TOM CRENNA	1/8/99
APPROVED		

FERMILAB PPD/ETT/ES CDMS (E-891)
ZIP MODULE
5 VOLT SECTION

SIZE	FSCM NO.	DWG. NO.	REV
C			
SCALE		SHEET 14-2	

POWER ON SEQUENCER CONTINUED

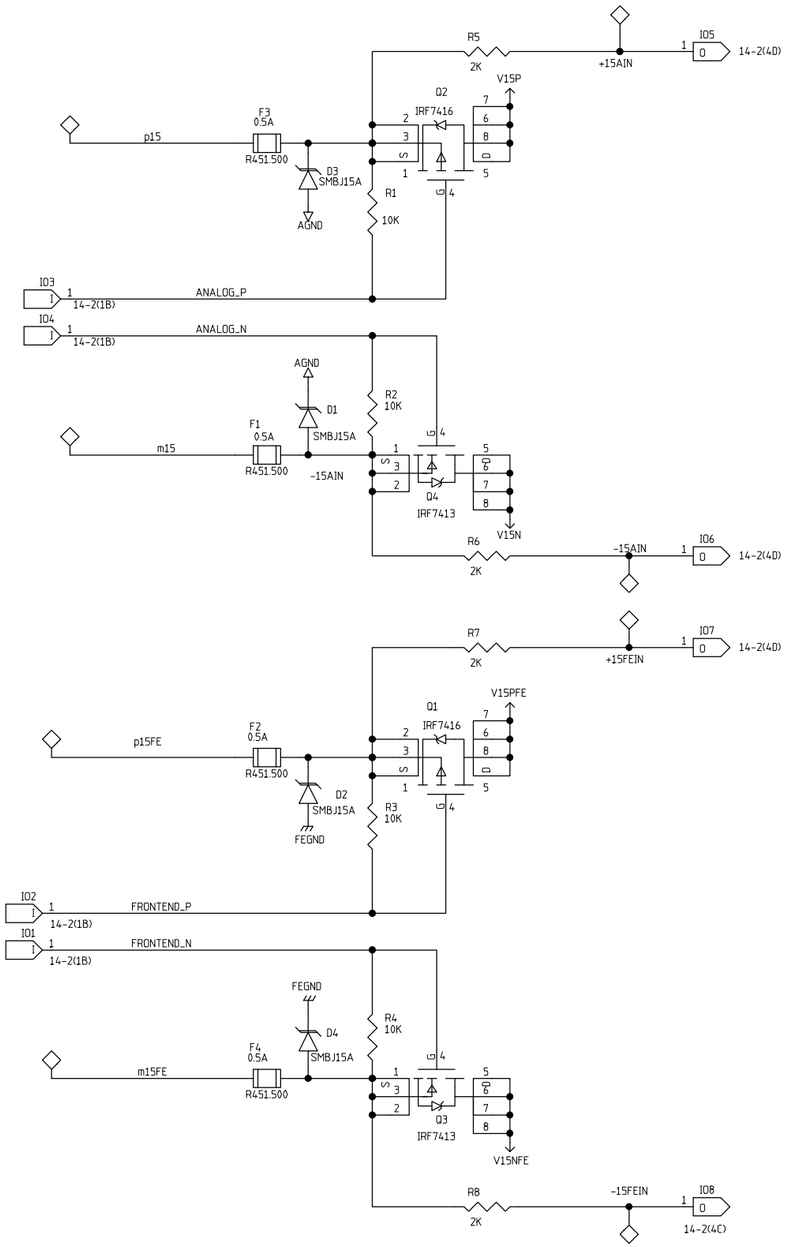

REVISIONS			
REV	DESCRIPTION	DATE	APPROVED

	NAME	DATE
ORIGINATOR	MERLE HALDEMAN	11/18/98
DRAWN	BRUCE MERKEL	11/18/98
CHECKED	TOM CRENNA	1/8/99
APPROVED		

FERMILAB PPD/ETT/ES CDMS (E-891)
ZIP MODULE
15 VOLT SECTION

SIZE	FSCM NO.	DWG. NO.	REV
C			
SCALE		SHEET 14-3	

REVISIONS			
REV	DESCRIPTION	DATE	APPROVED

10 VOLT REFERENCE

10 VOLT BUFFER & NOISE FILTER

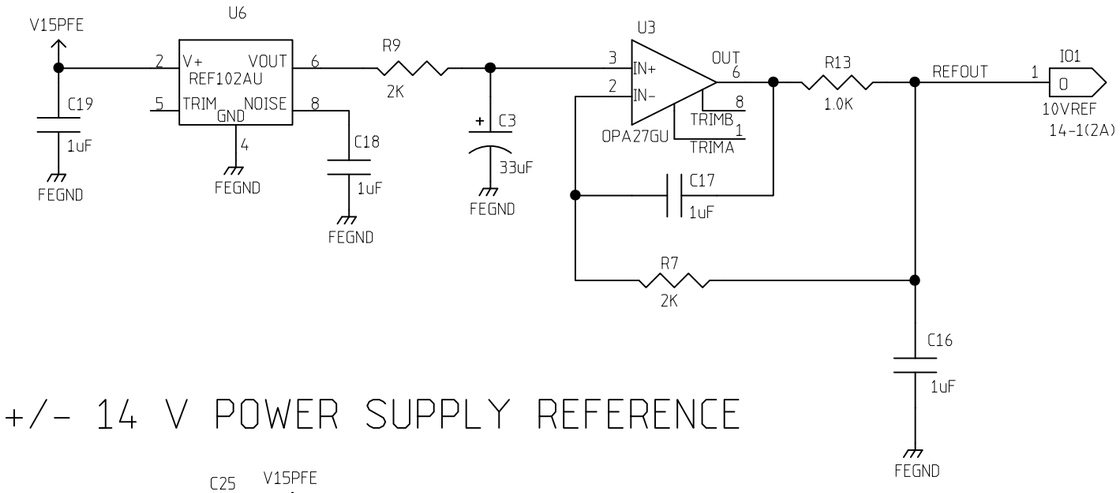

+/- 14 V POWER SUPPLY REFERENCE

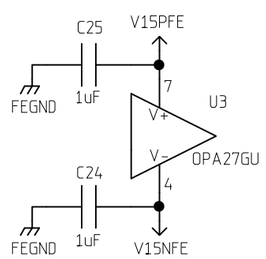

	NAME	DATE
ORIGINATOR	MERLE HALDEMAN	11/18/98
DRAWN	BRUCE MERKEL	11/18/98
CHECKED	TOM CRENNA	1/8/99
APPROVED		

FERMILAB PPD/ETT/ES CDMS (E-891)
ZIP MODULE
Q AMP REFERENCE

SIZE	FSCM NO.	DWG. NO.	REV
B			

SCALE | SHEET 14-4