REVISIONS			
REV	DESCRIPTION	DATE	APPROVED

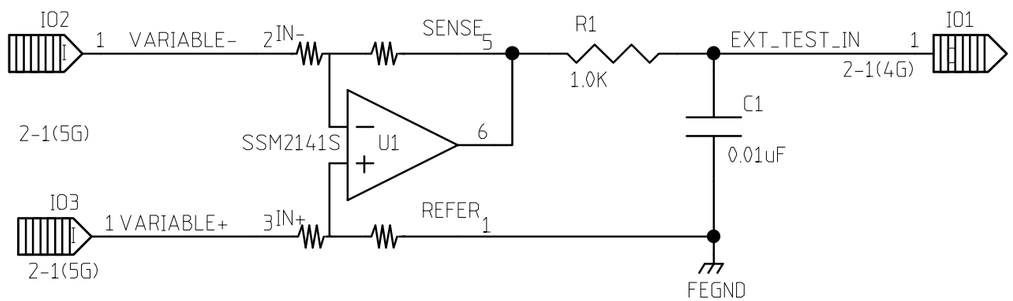

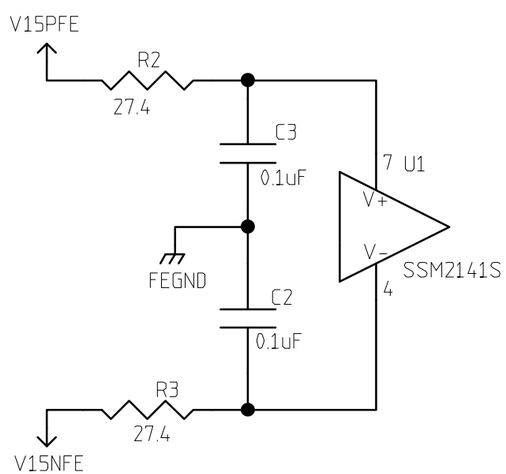

	NAME	DATE
ORIGINATOR	MERLE HALDEMAN	11/16/98
DRAWN	BRUCE MERKEL	11/16/98
CHECKED	TOM CRENNA	1/8/99
APPROVED		

FERMILAB PPD/ETT/ES CDMS (E-891)
ZIP MODULE
EXTERNAL TEST RECEIVER

SIZE	FSCM NO.	DWG. NO.	REV
A			

SCALE | SHEET 11-1

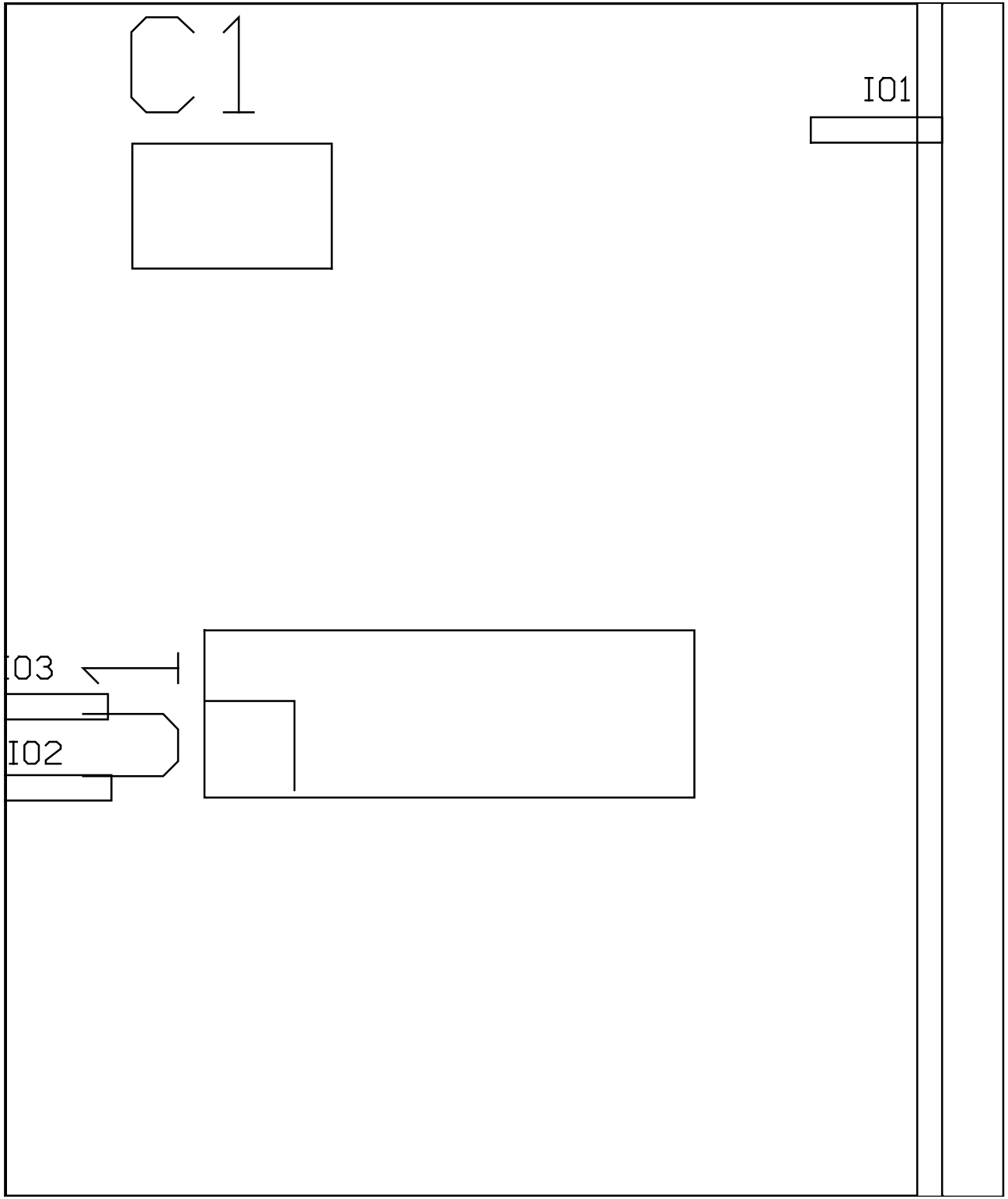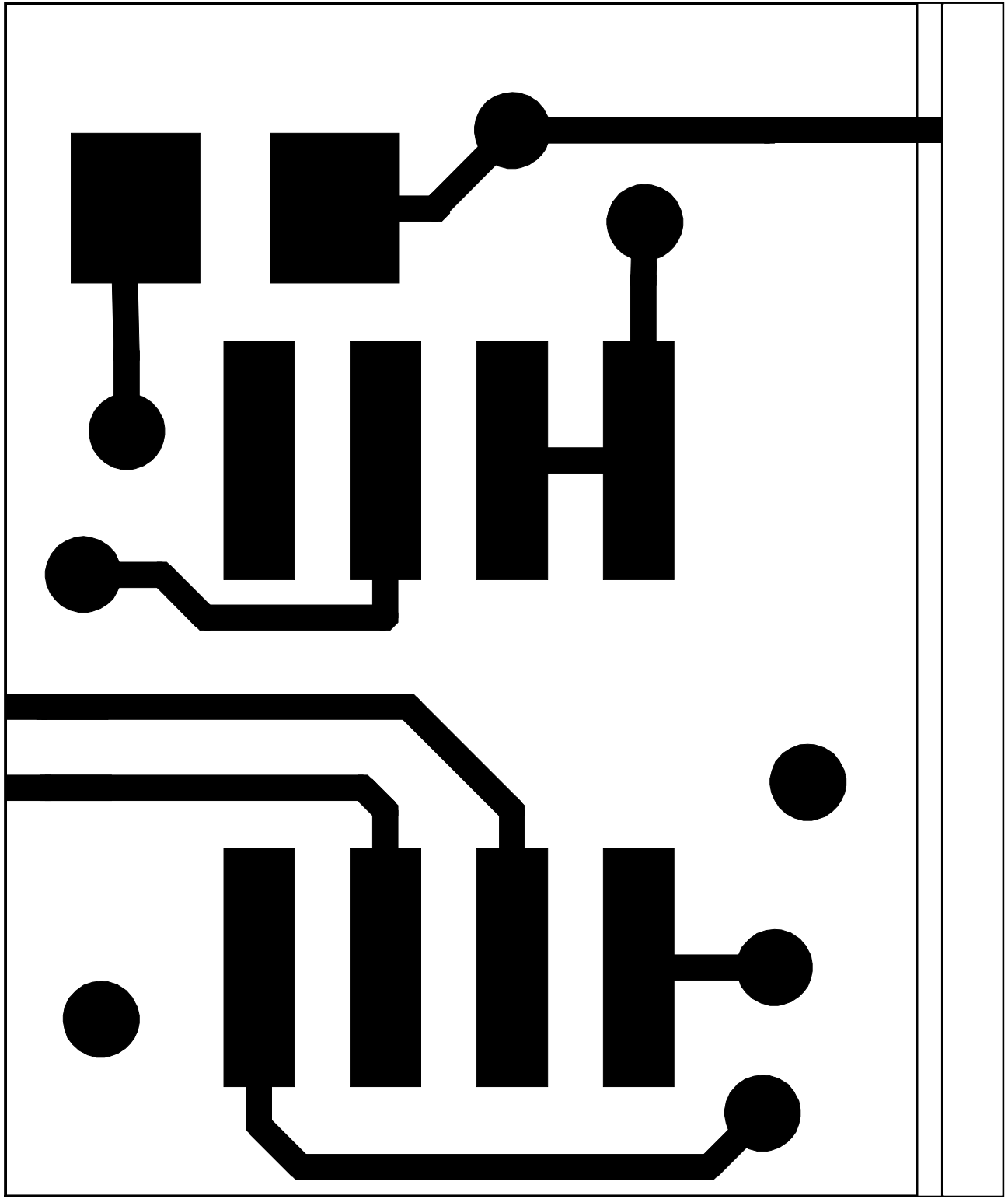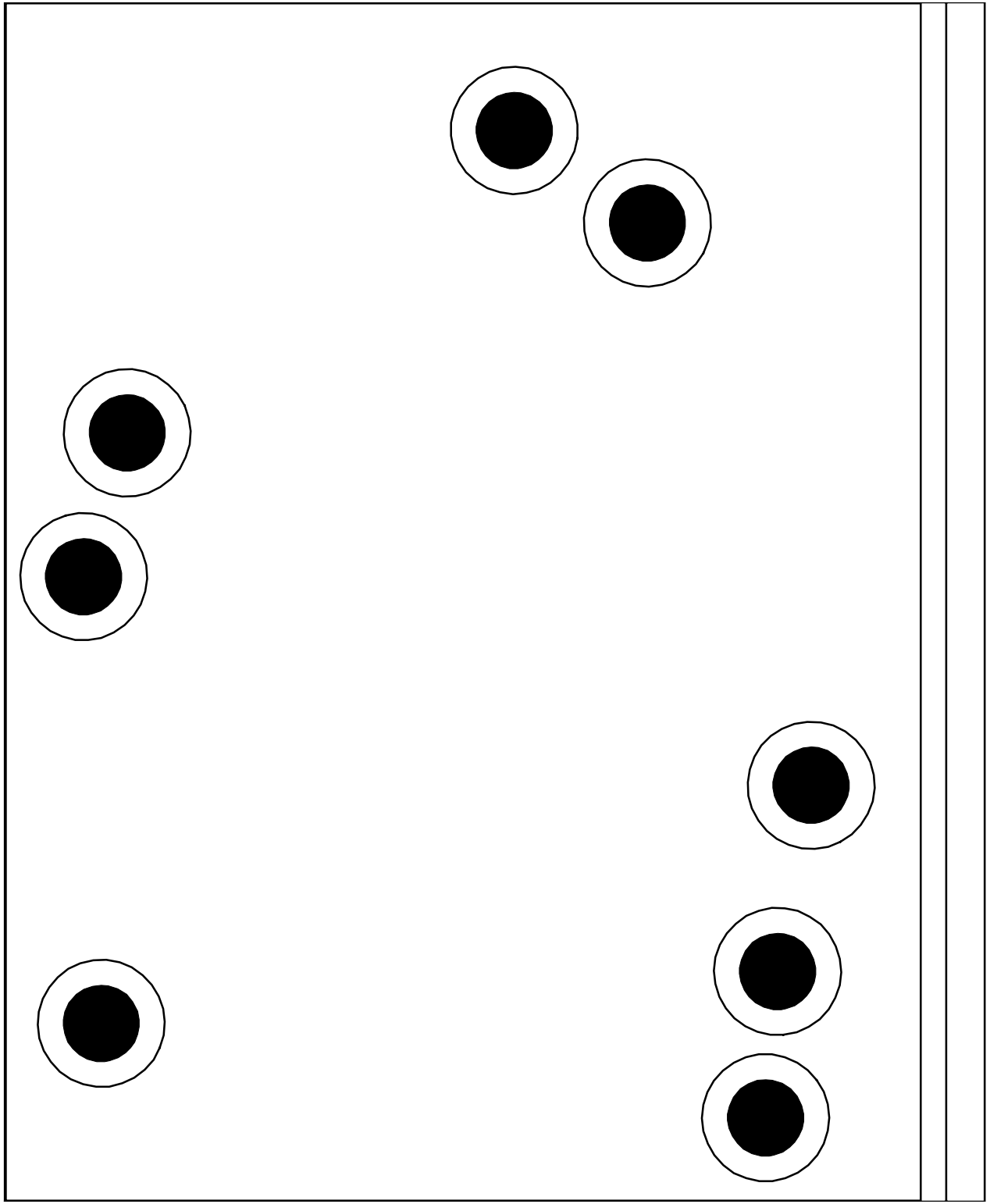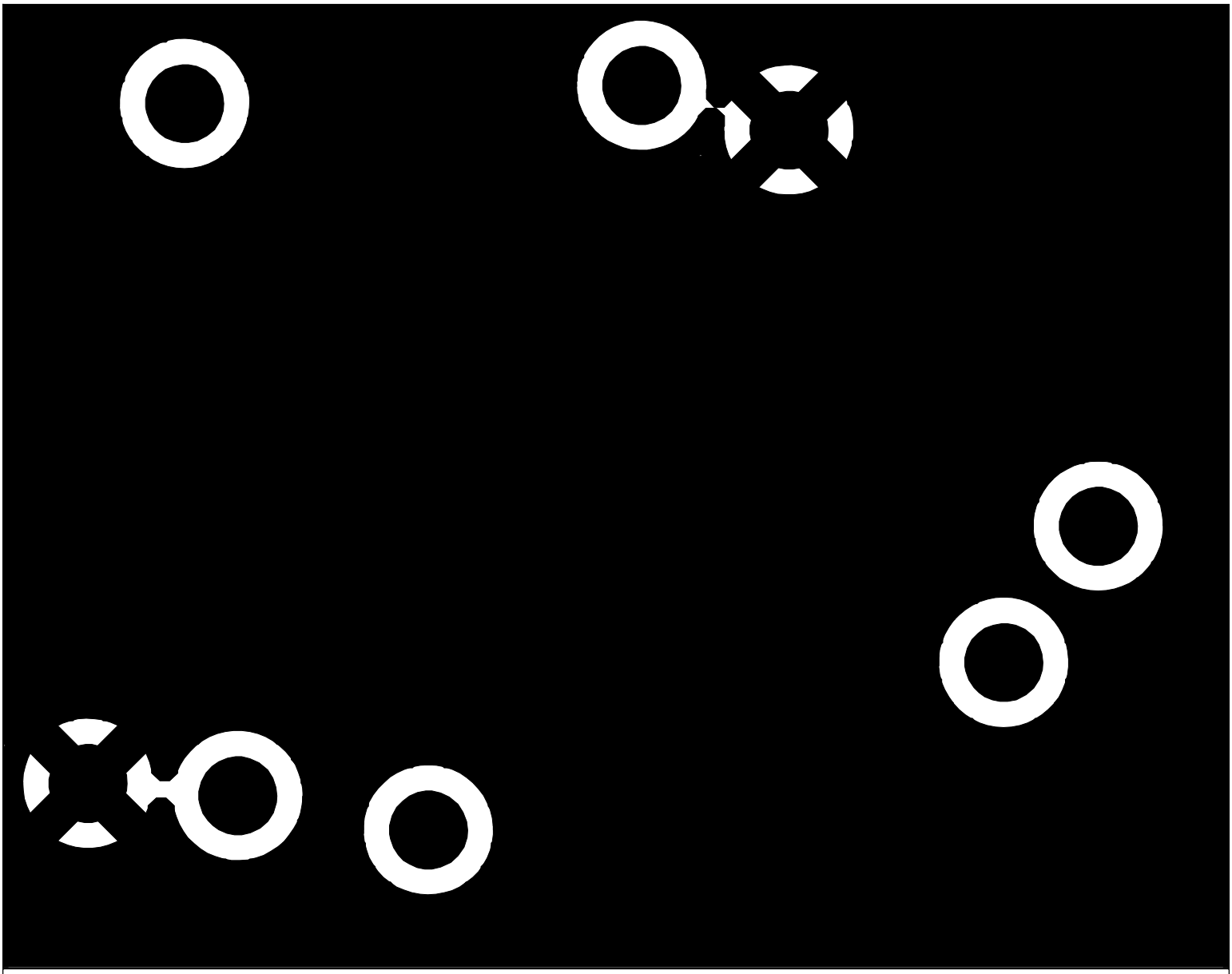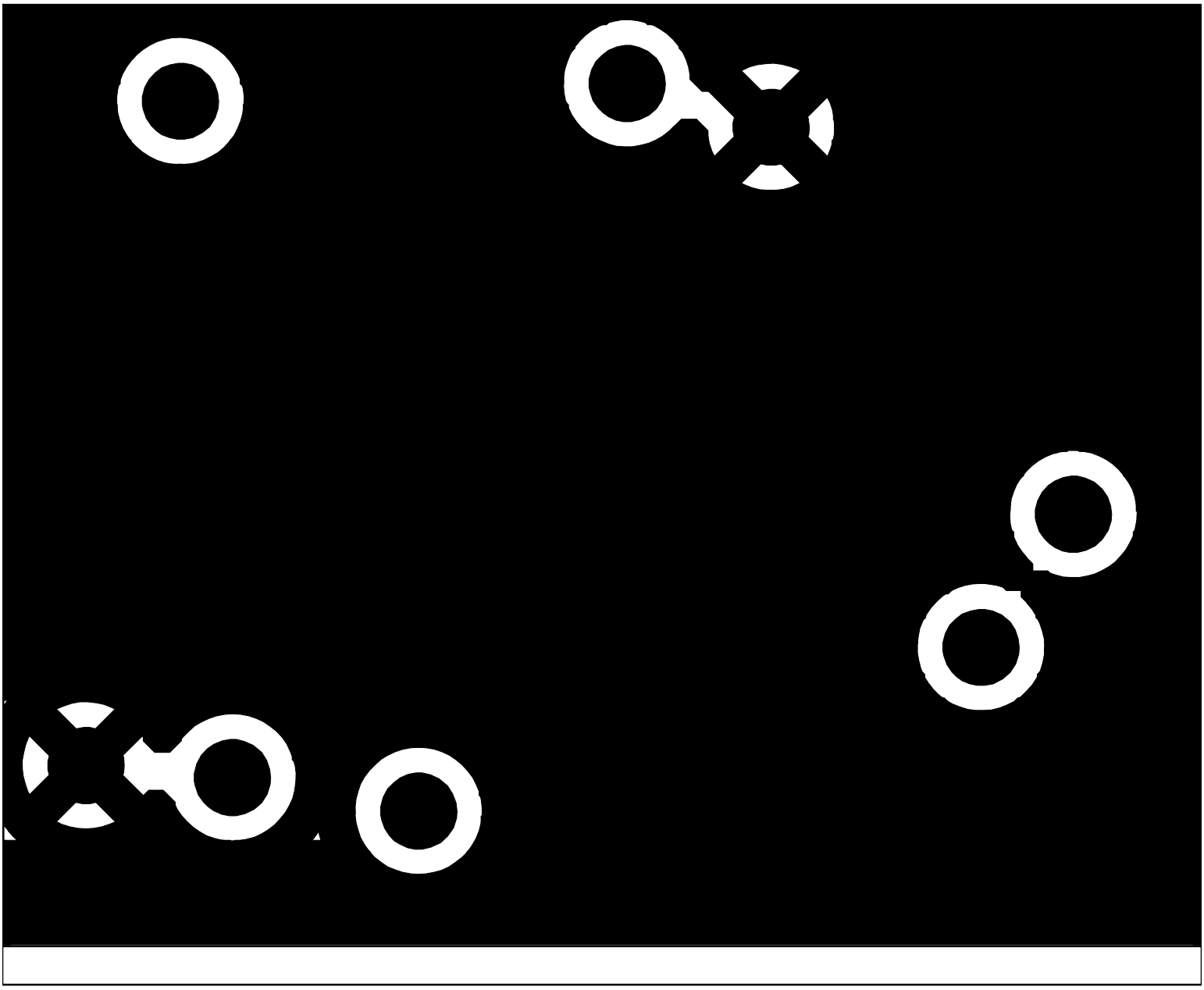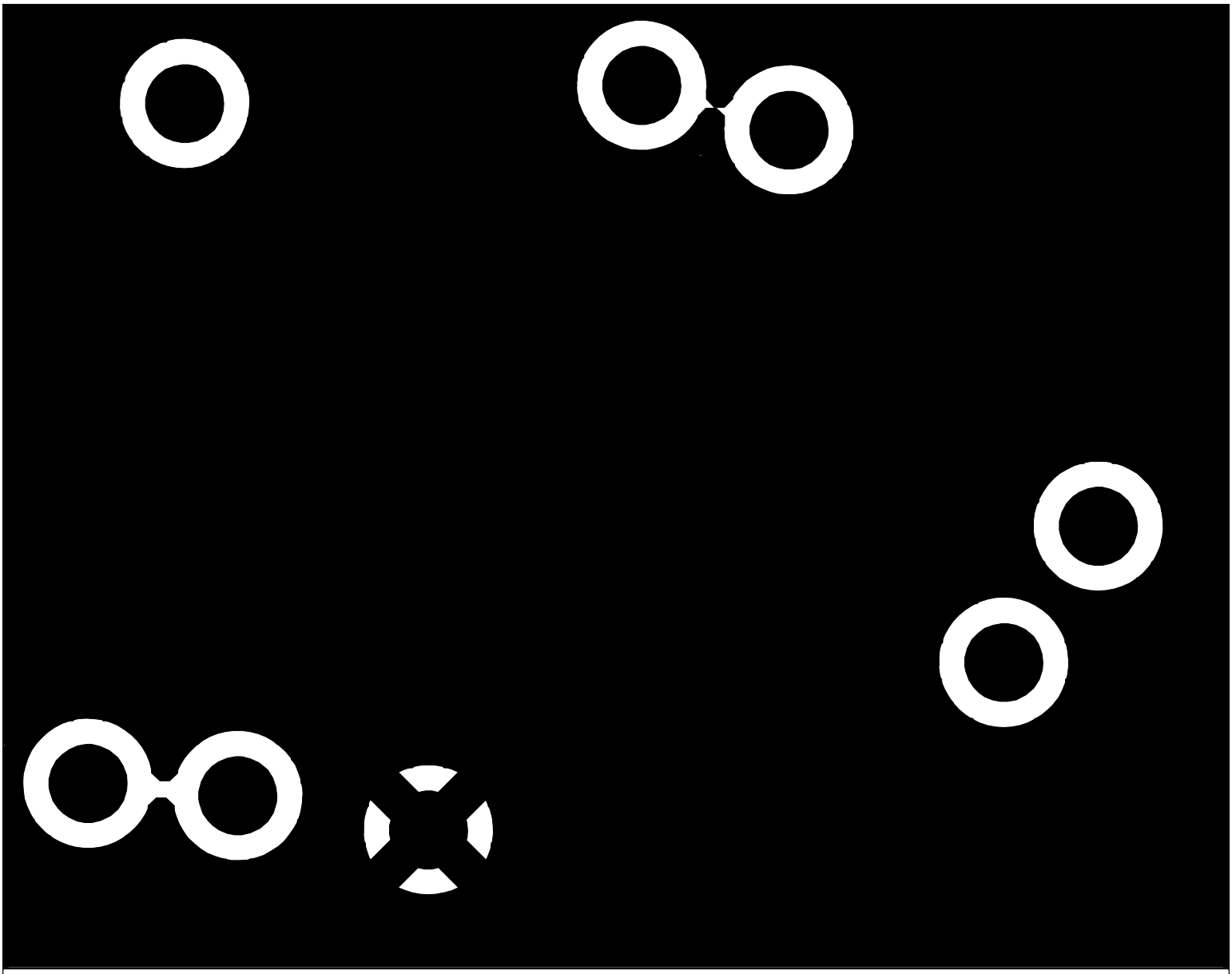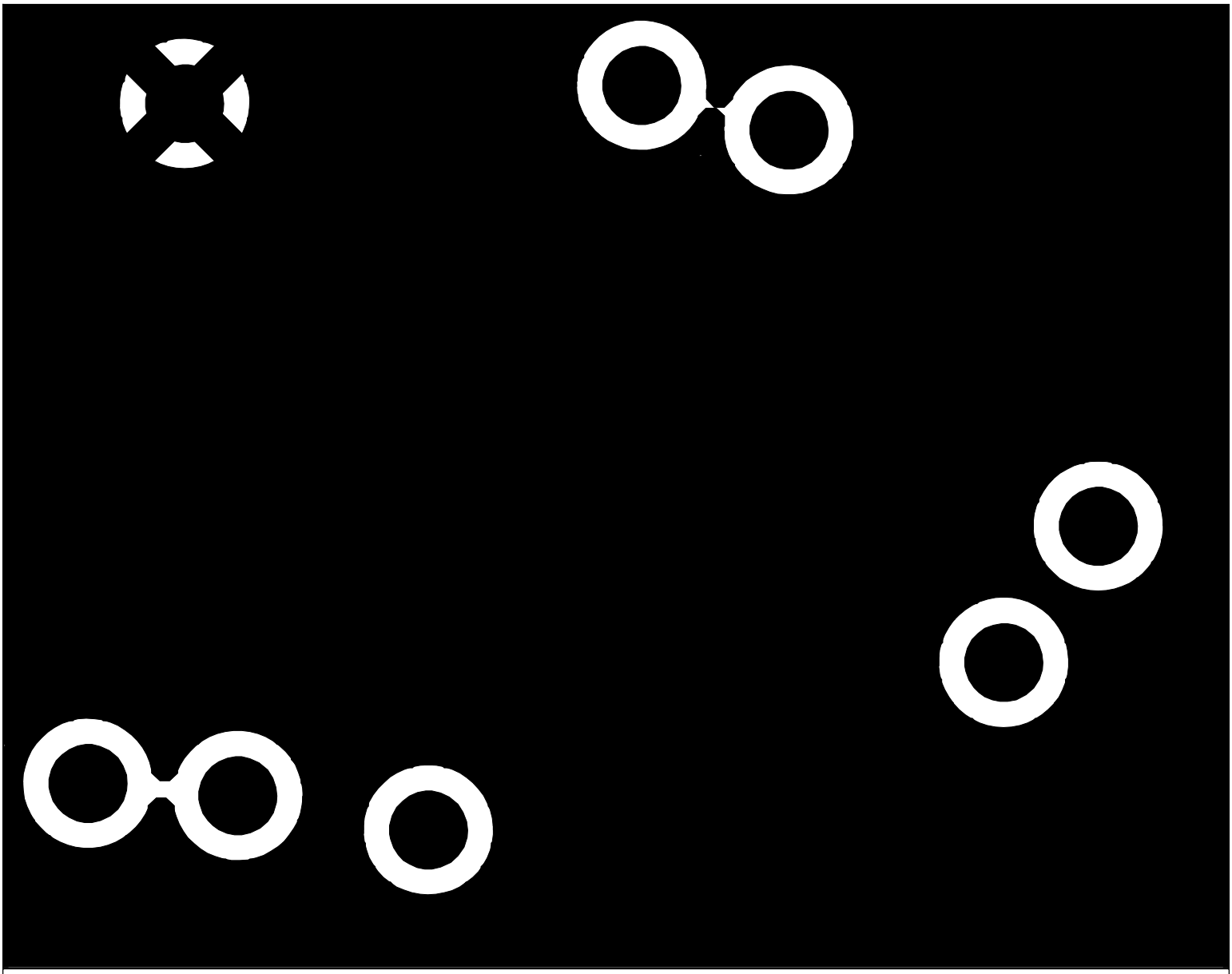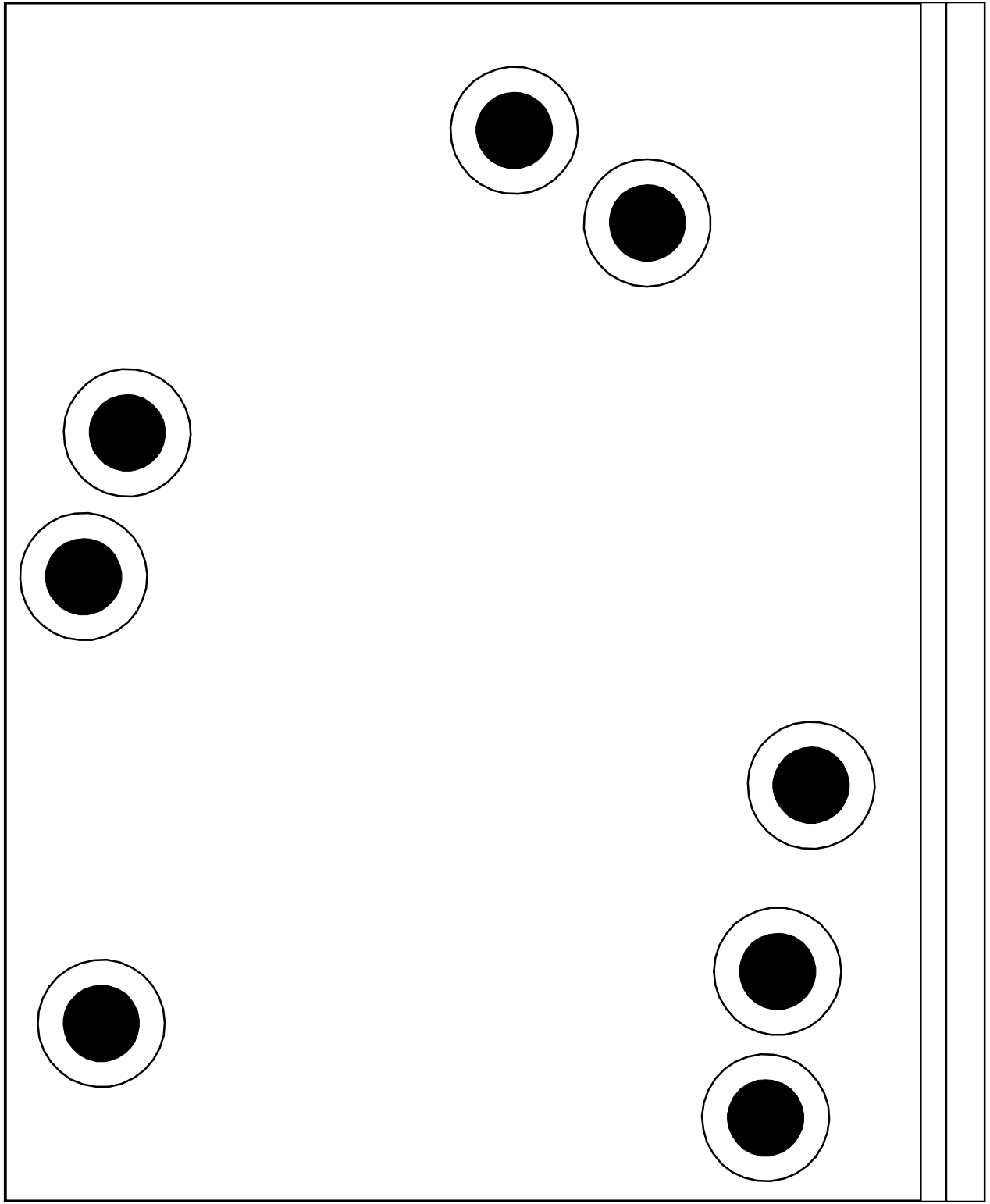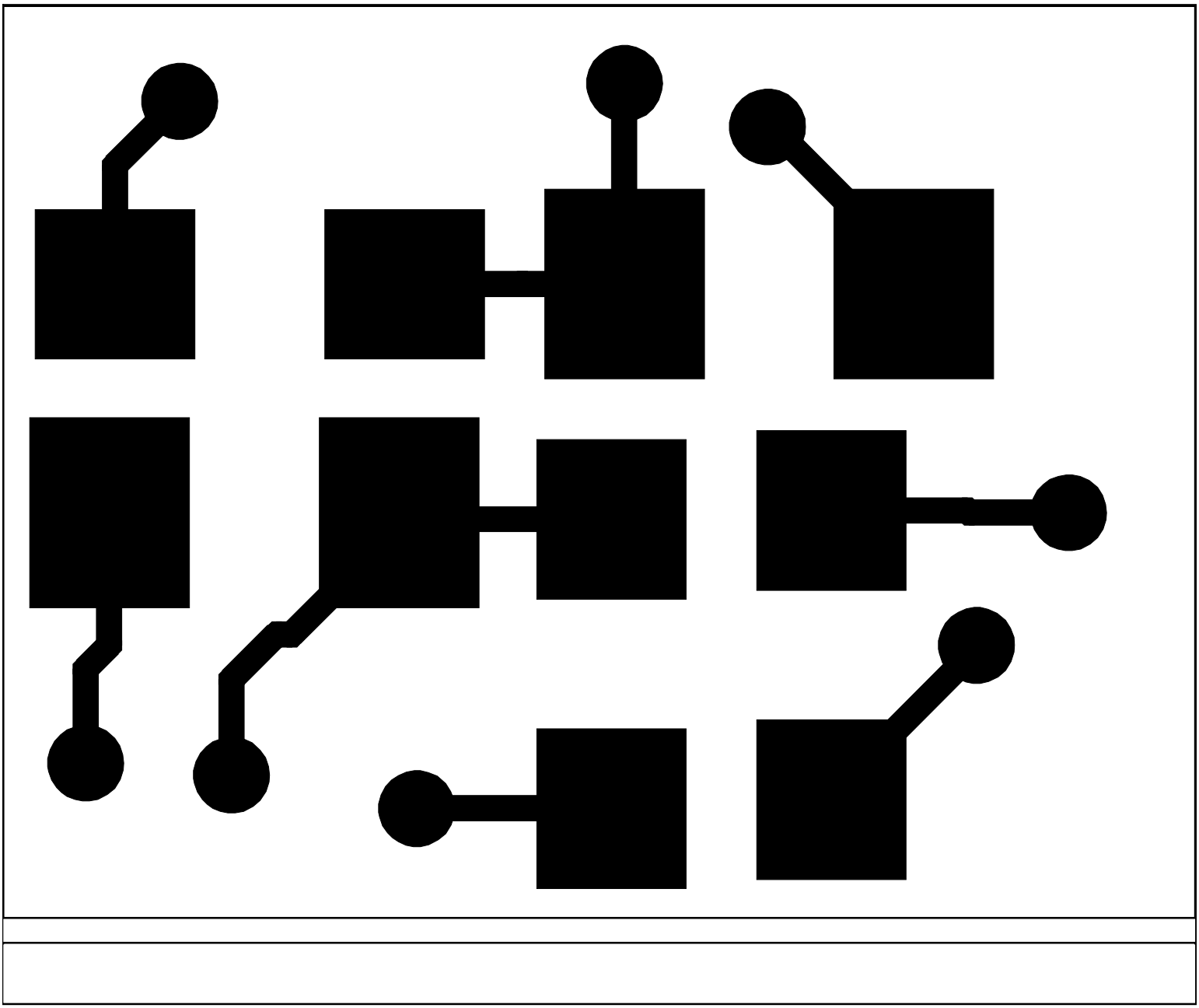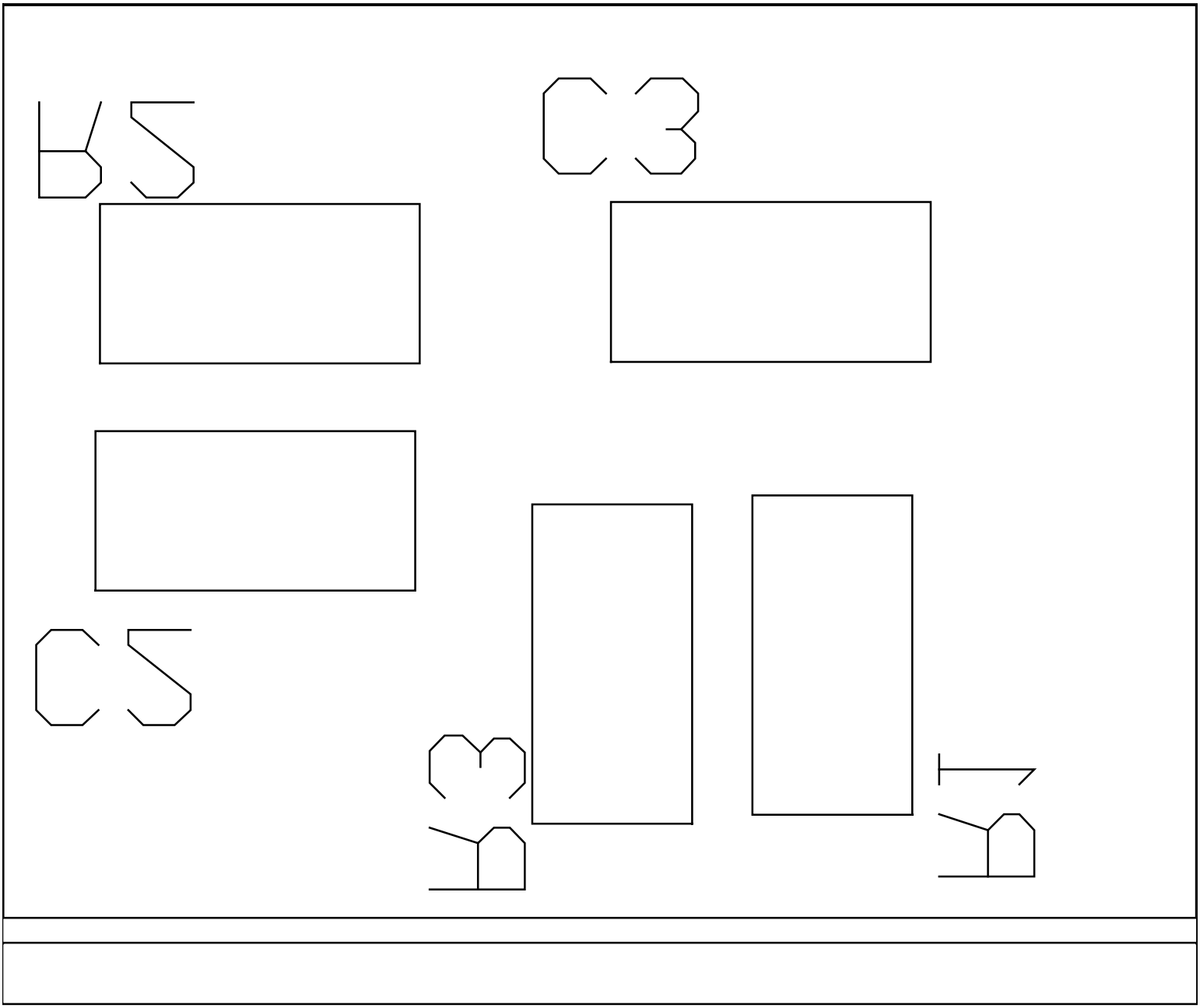
C1
IO1
IO3
IO2