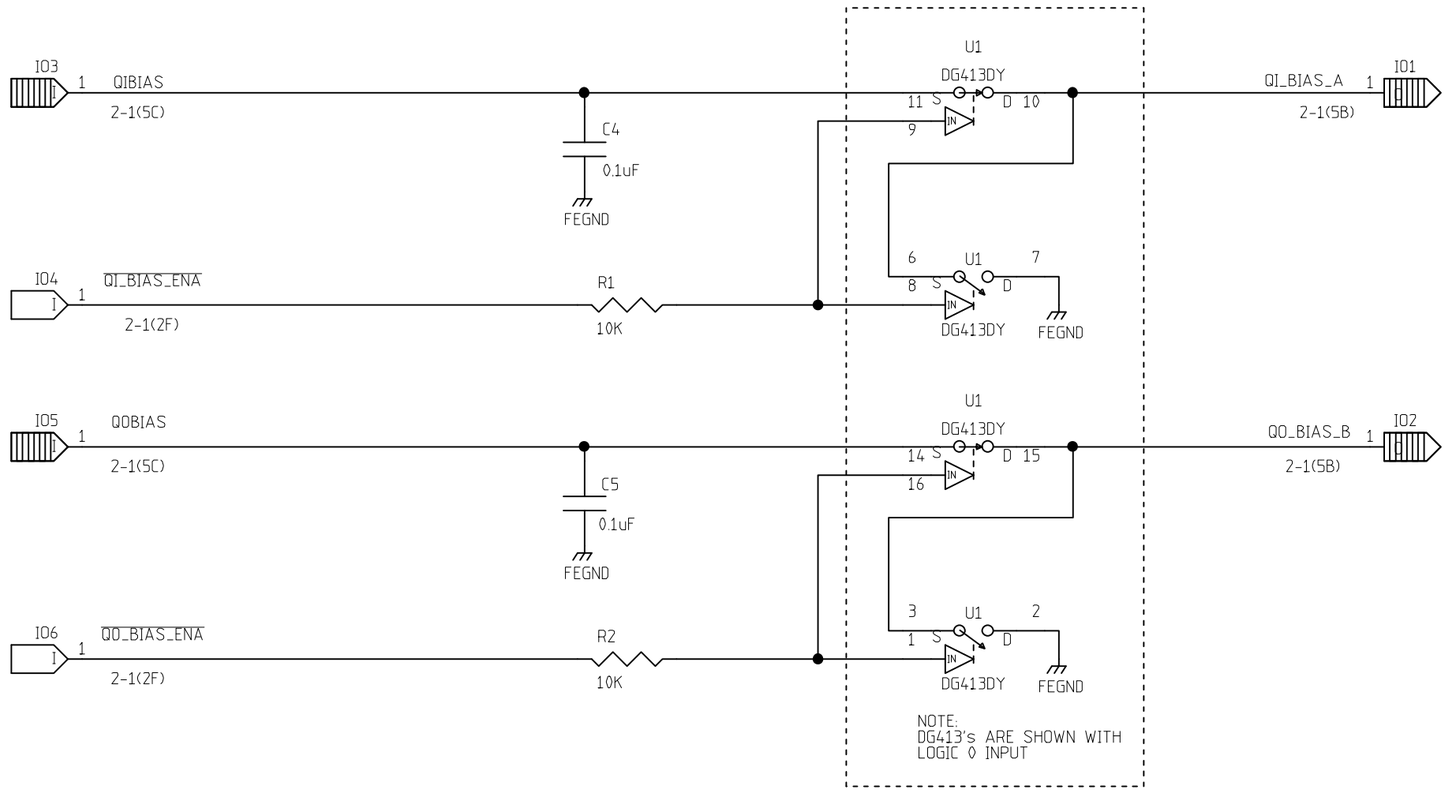


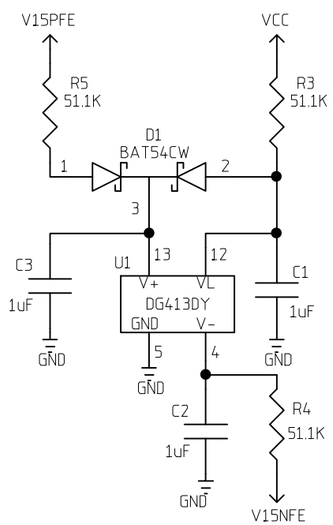


| REVISIONS | | | |
|---|---|---|---|
| REV | DESCRIPTION | DATE | APPROVED |
| | | | |

| | NAME | DATE |
|---|---|---|
| ORIGINATOR | MERLE HALDEMAN | 11/16/98 |
| DRAWN | BRUCE MERKEL | 12/08/98 |
| CHECKED | TOM CRENNA | 1/6/99 |
| APPROVED | | |

FERMILAB PPD/ETT/ES CDMS (E-891)
ZIP MODULE
QBIAS FRONT END

| SIZE | FSCM NO. | DWG. NO. | REV |
|---|---|---|---|
| B | | | |
| SCALE | | SHEET 7-1 | |

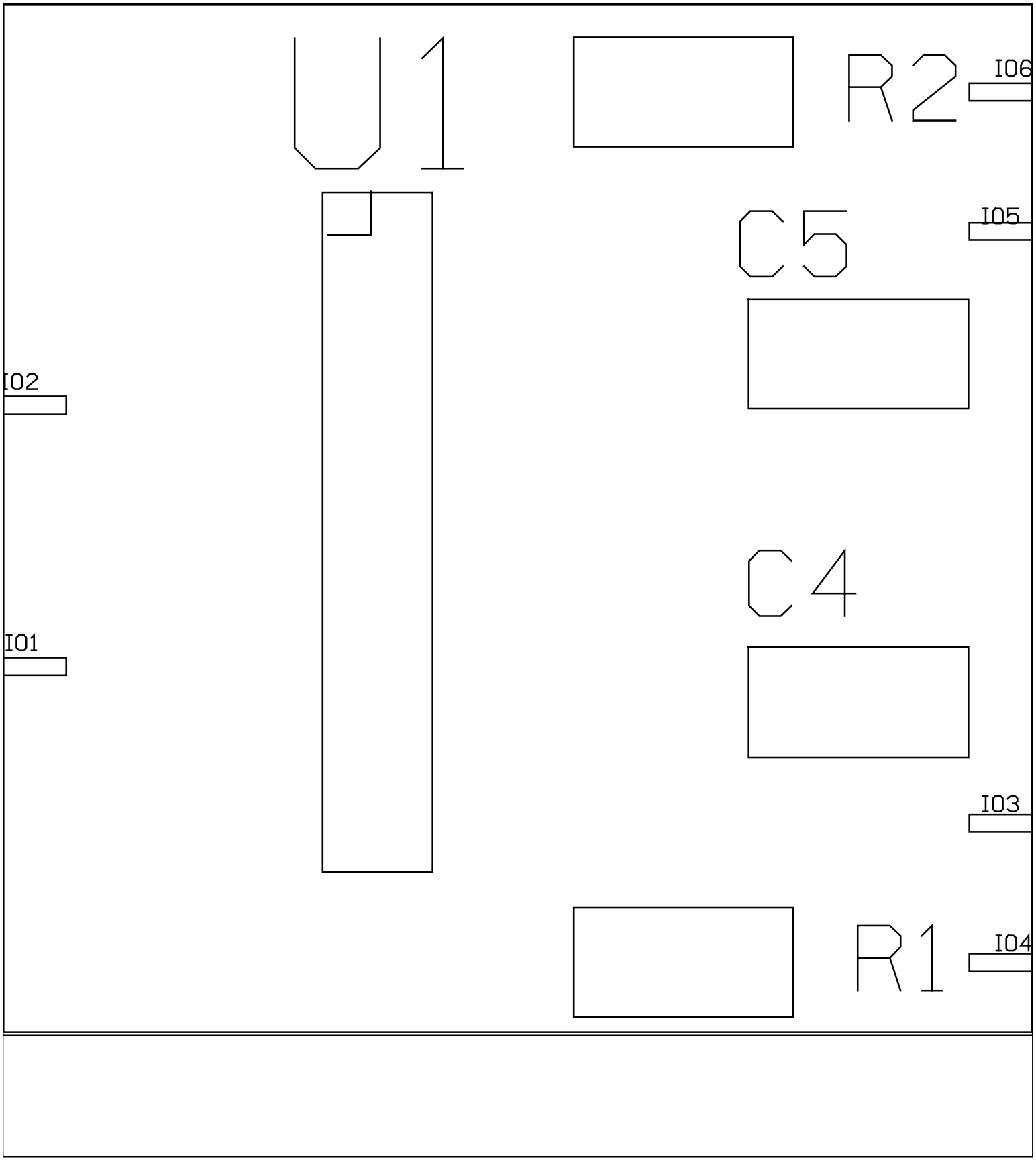
U1
R2
IO6
C5
IO5
IO2
C4
IO1
IO3
R1
IO4

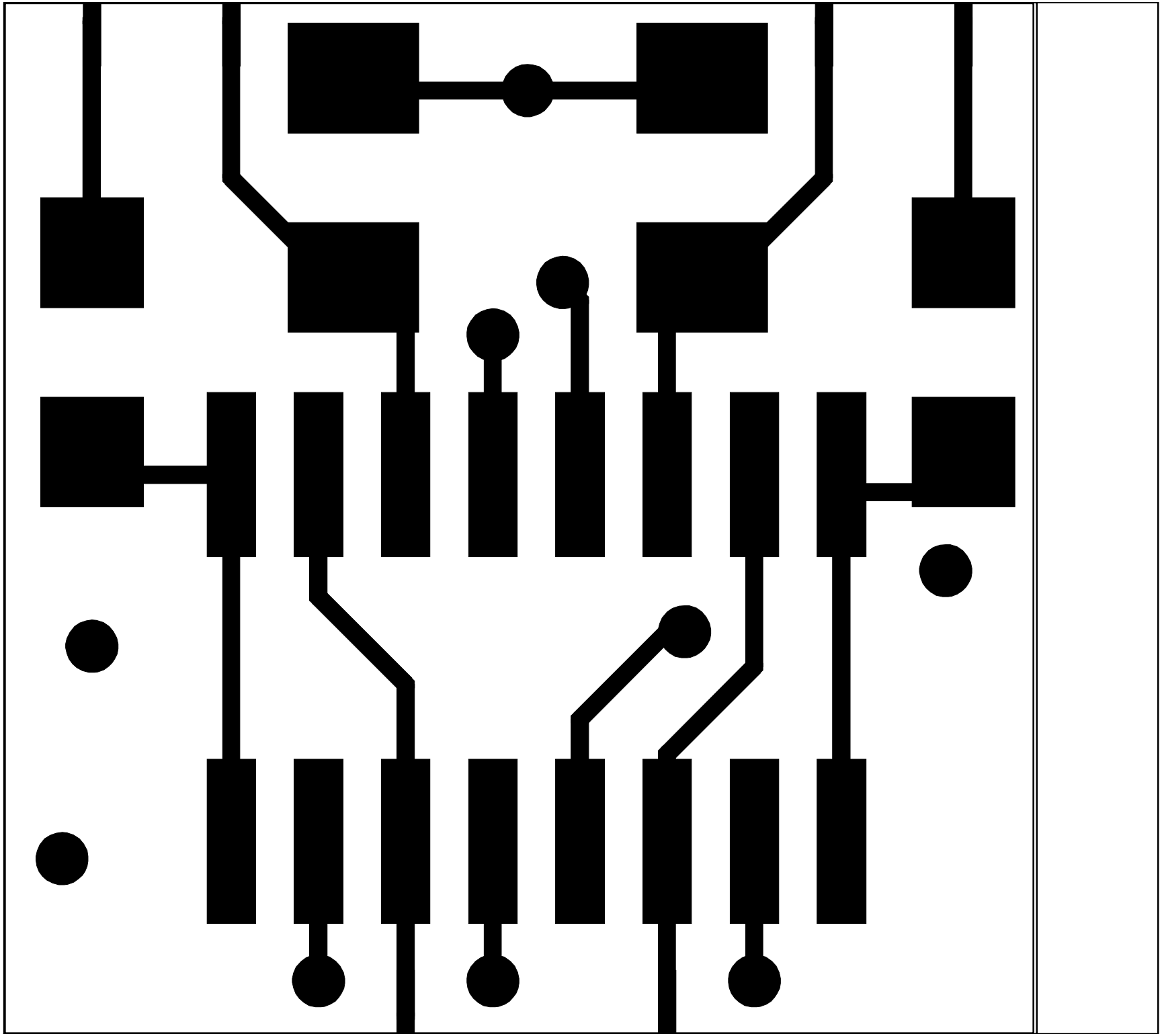

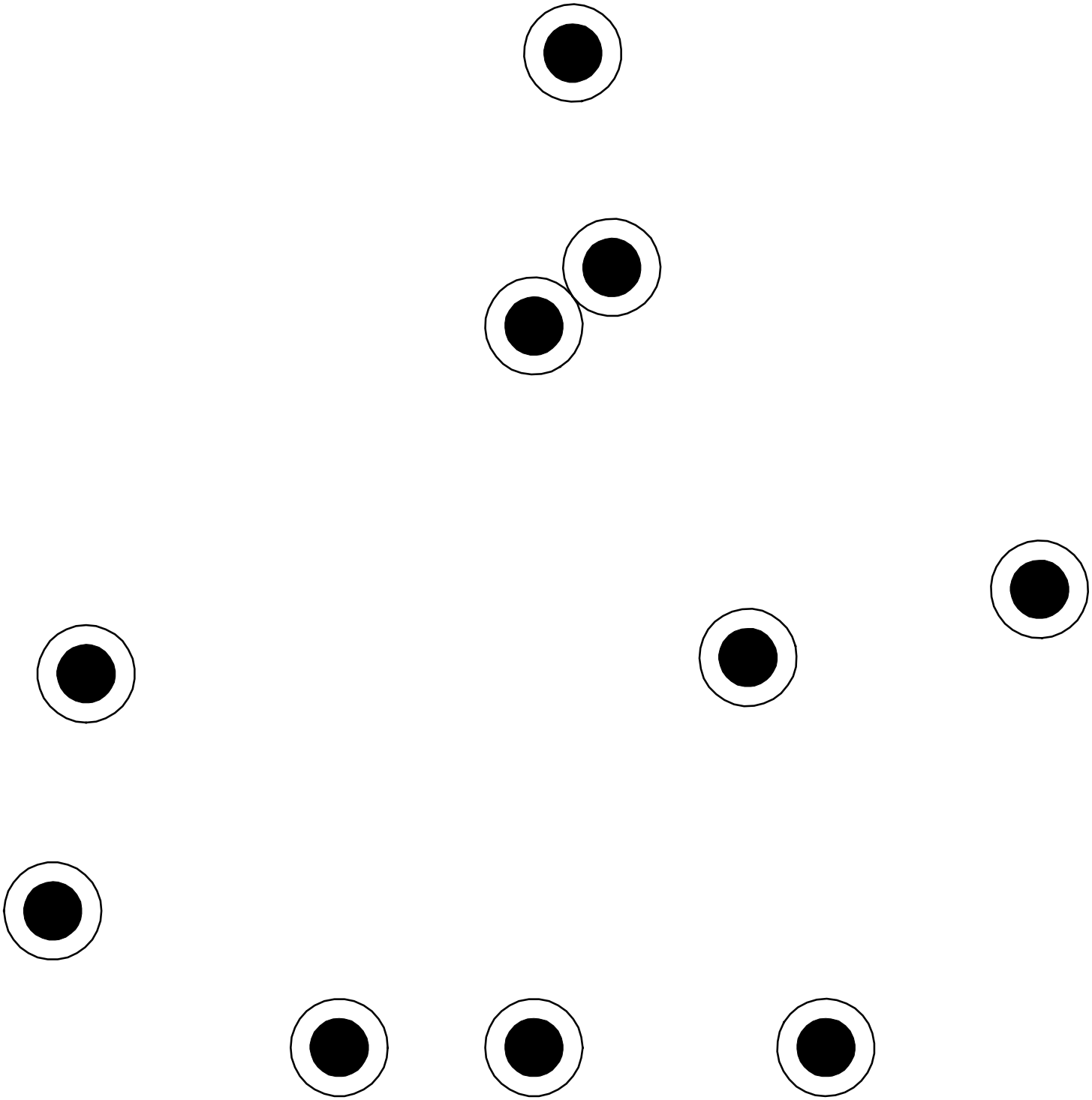

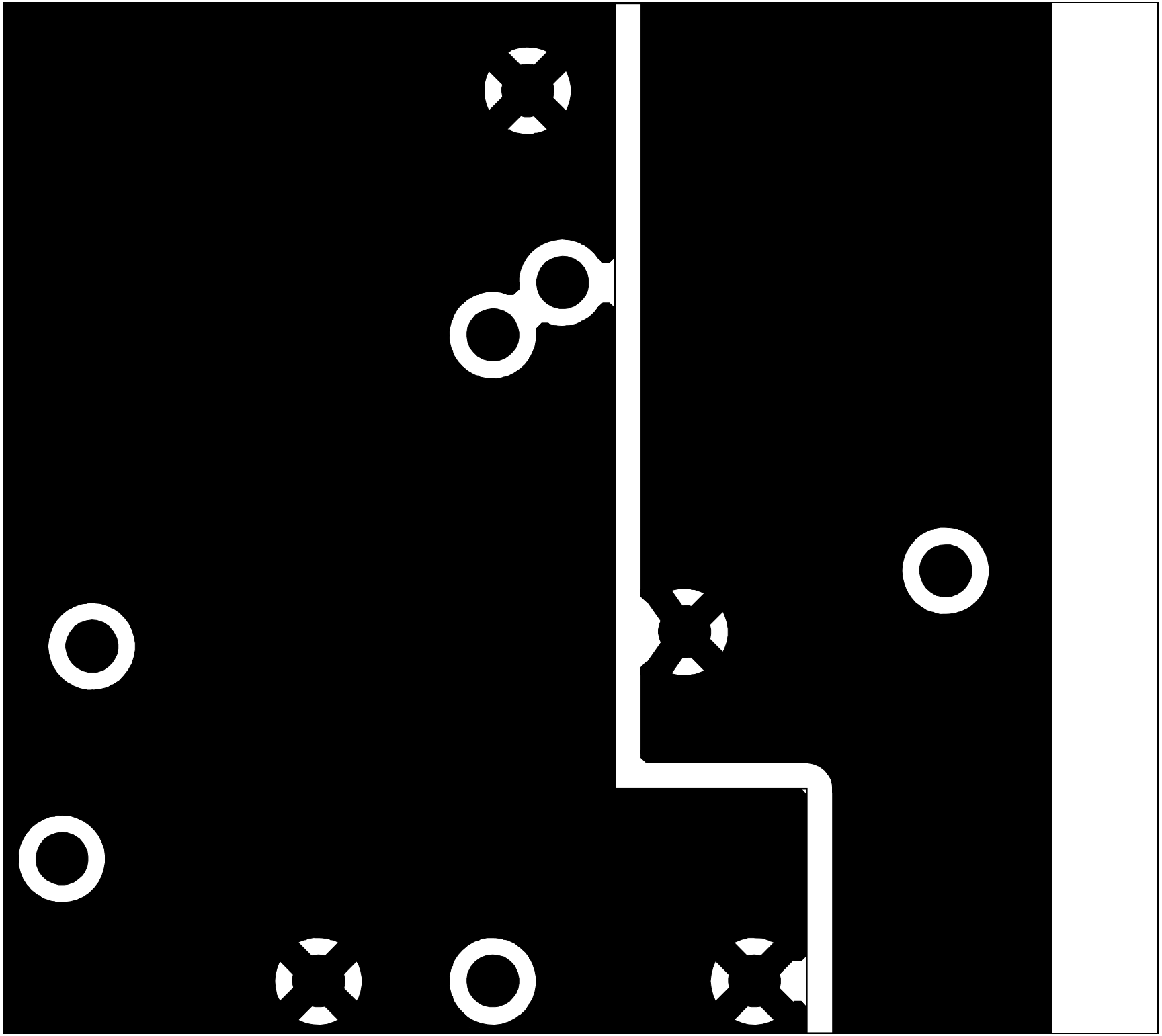

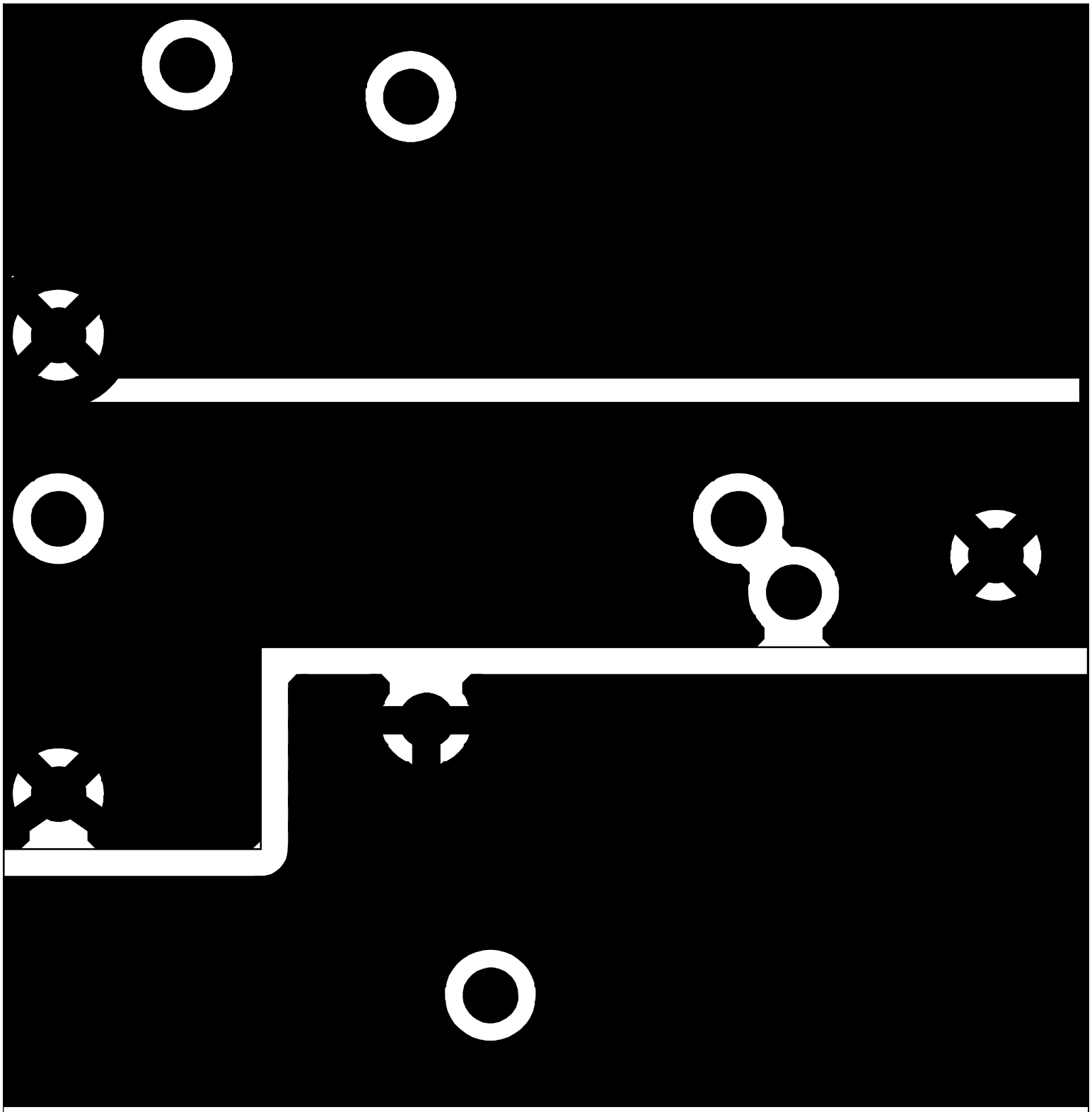

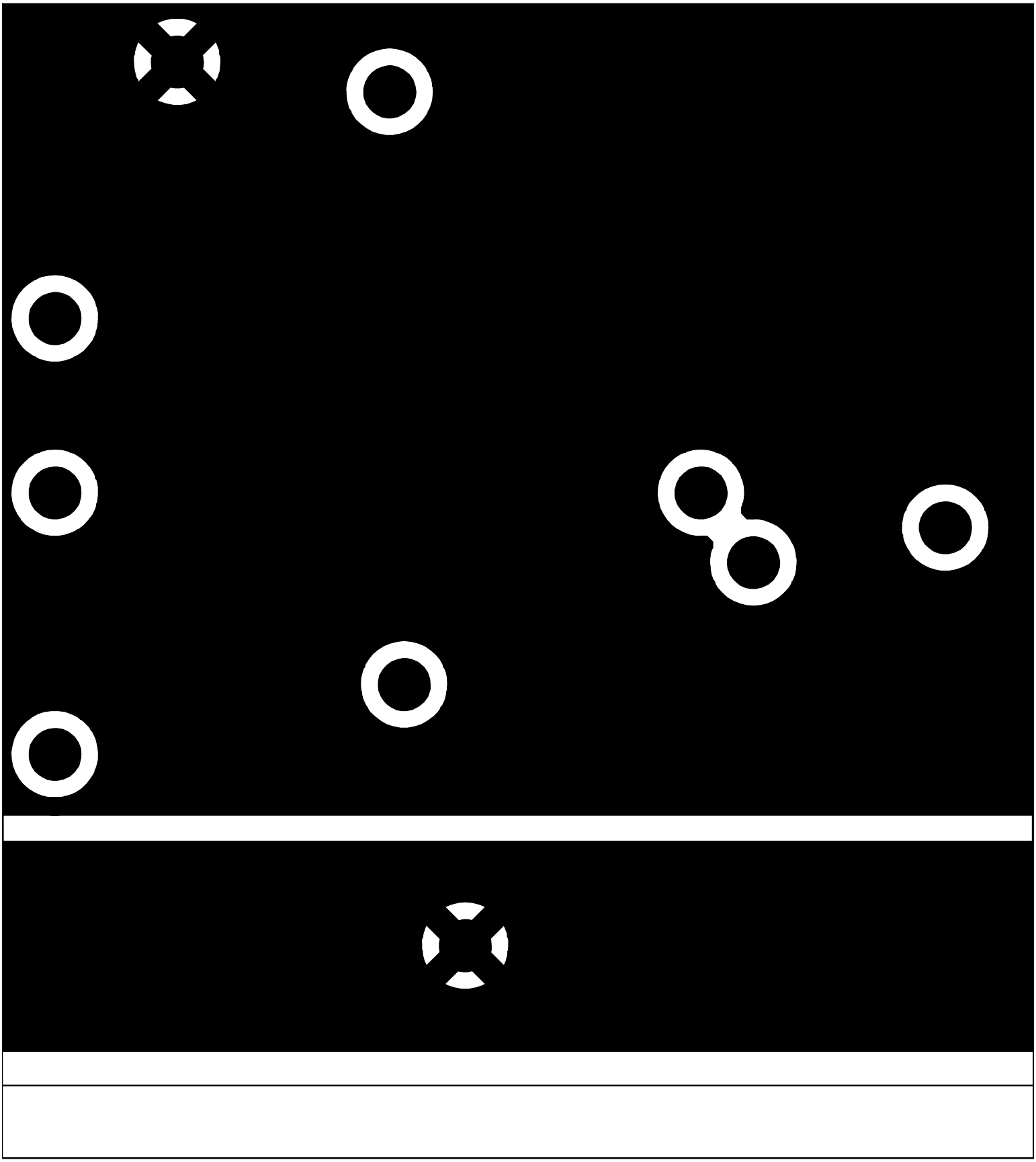

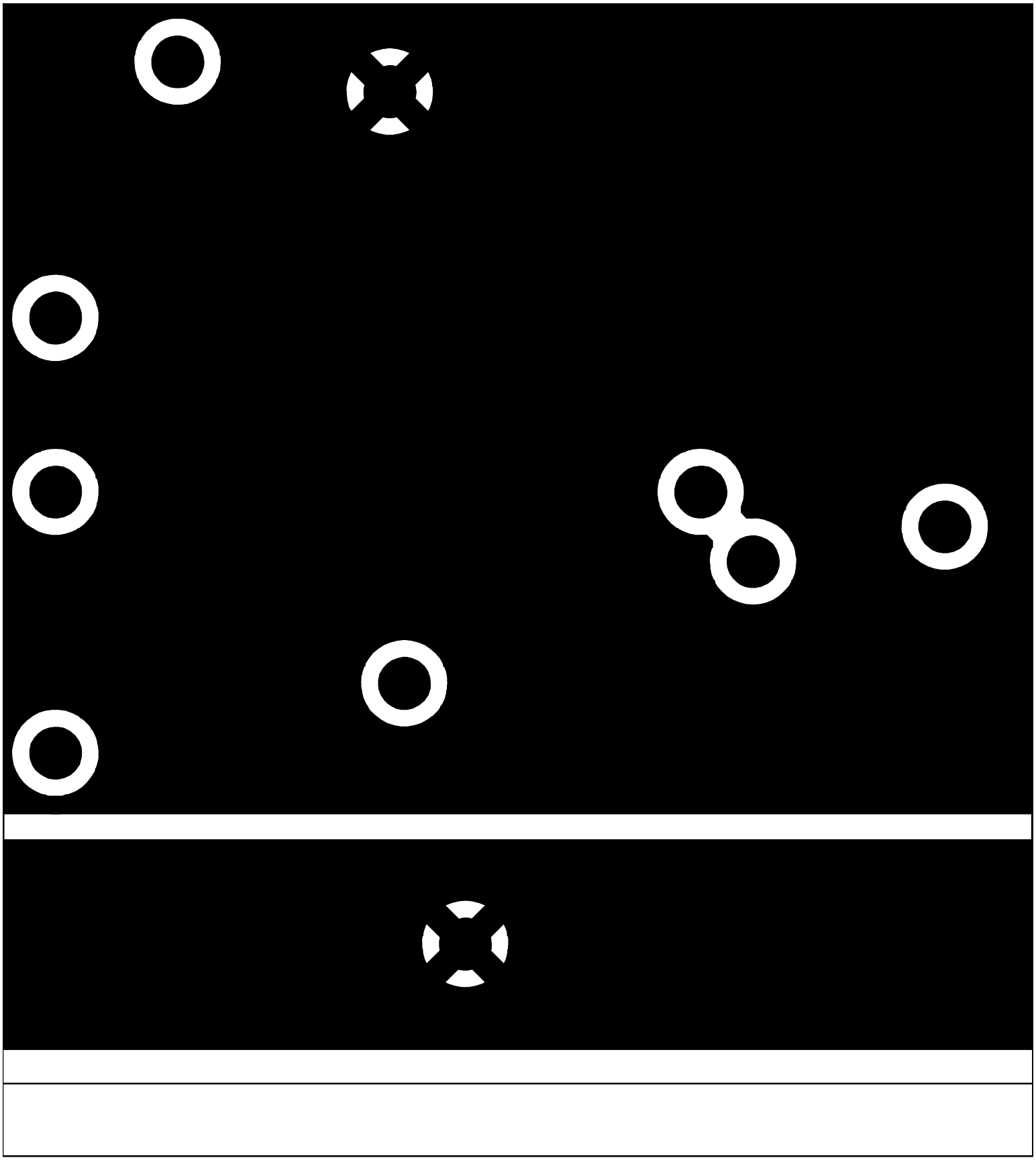

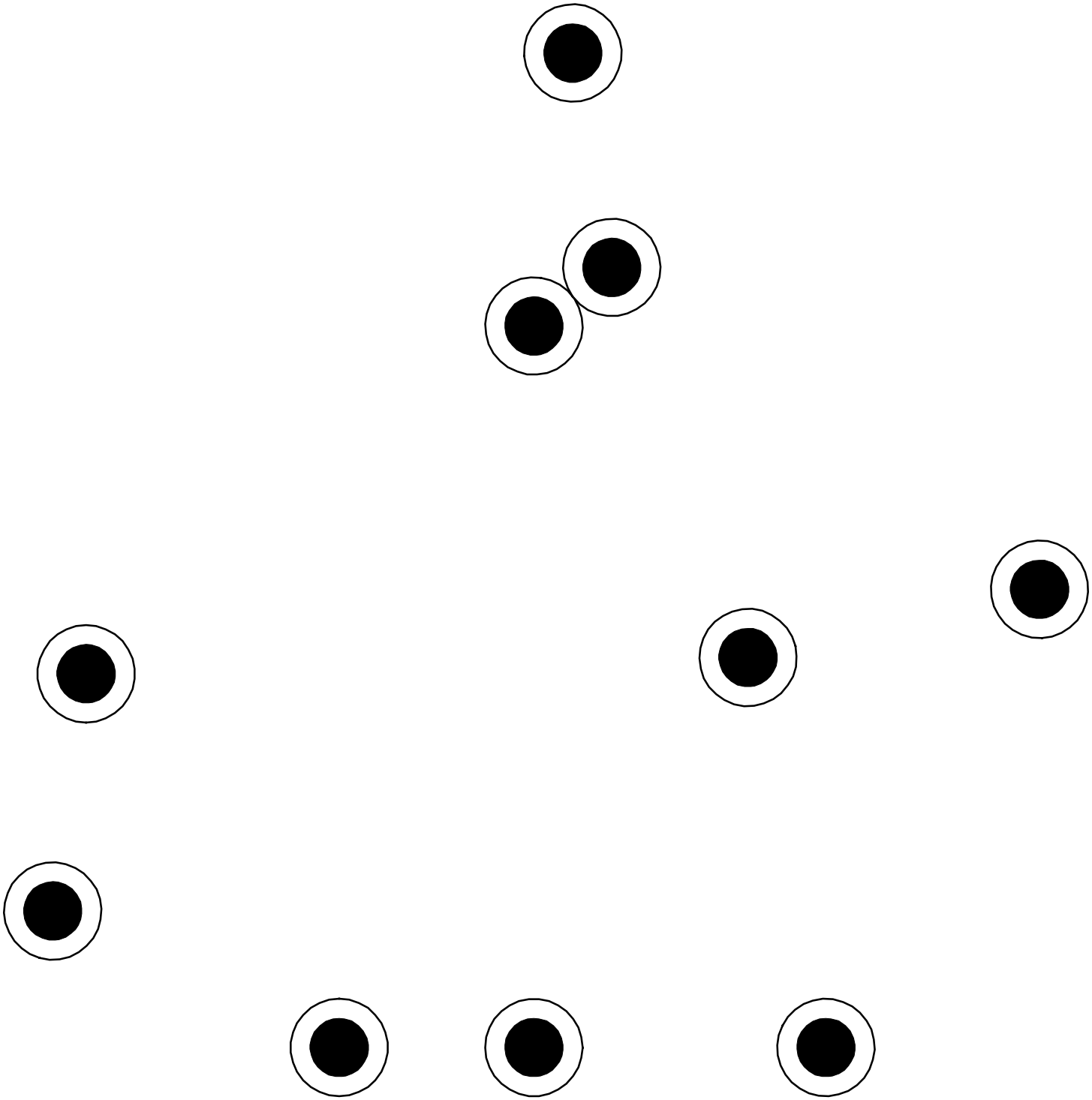

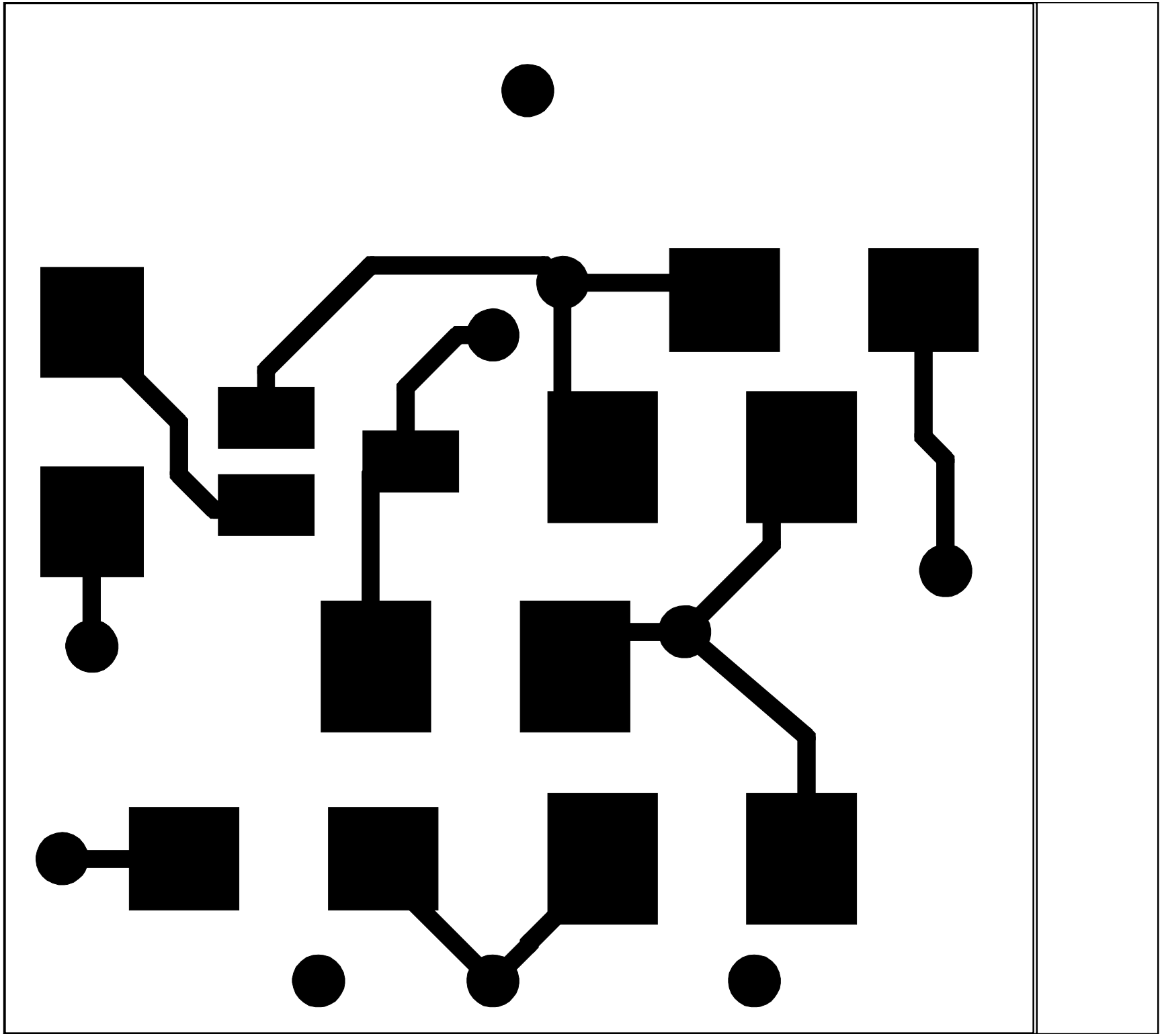

R3
D1
U2
C1
C3
C2
R4