REVISIONS			
REV	DESCRIPTION	DATE	APPROVED

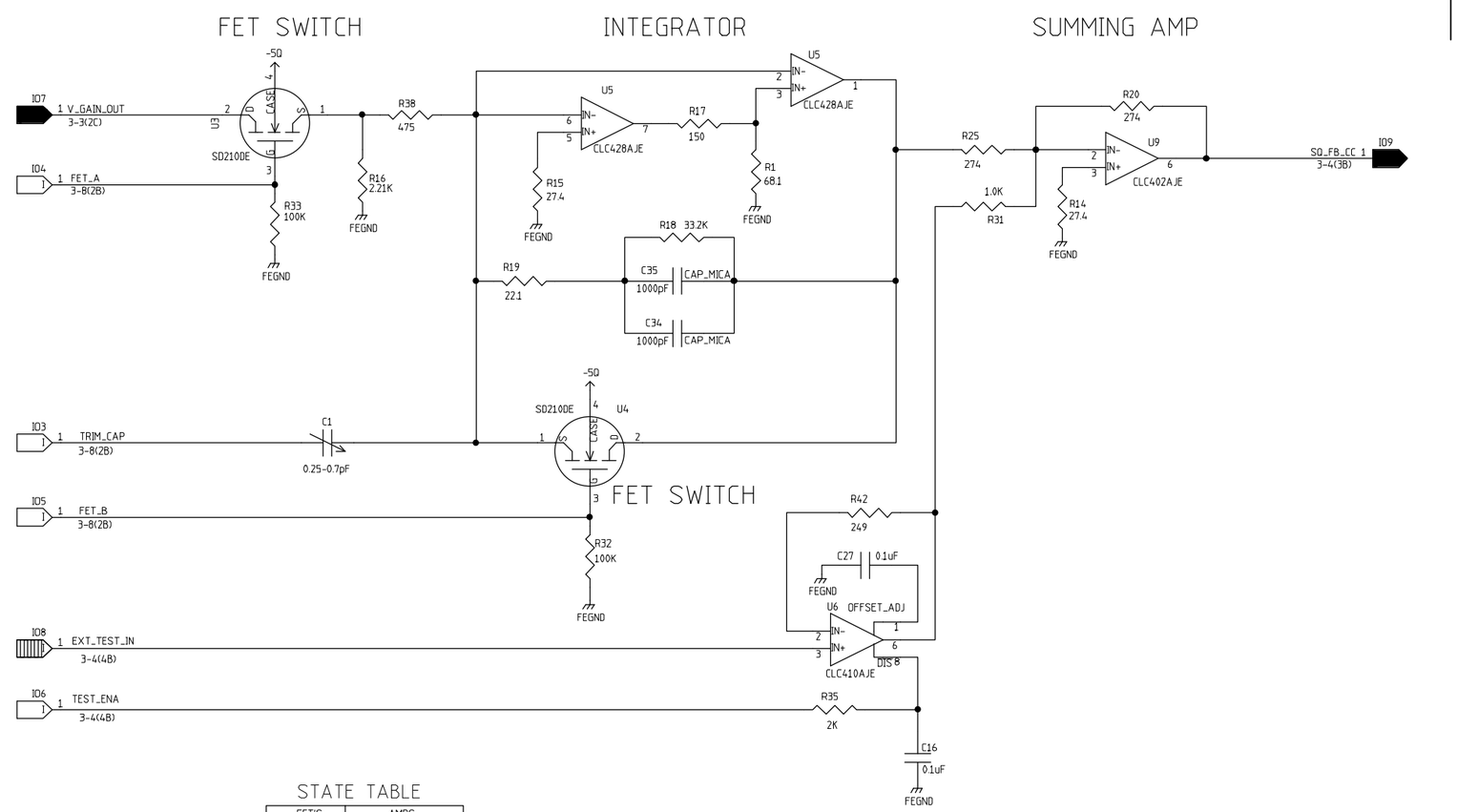

STATE TABLE

	FET'S		AMPS		
FB_O/C	U3	U4	U6	U7	U8
LOW	O	C	E	D	E
HI	C	O	D	E	D

O = OPEN C = CLOSED
E = ENABLE D = DISABLE

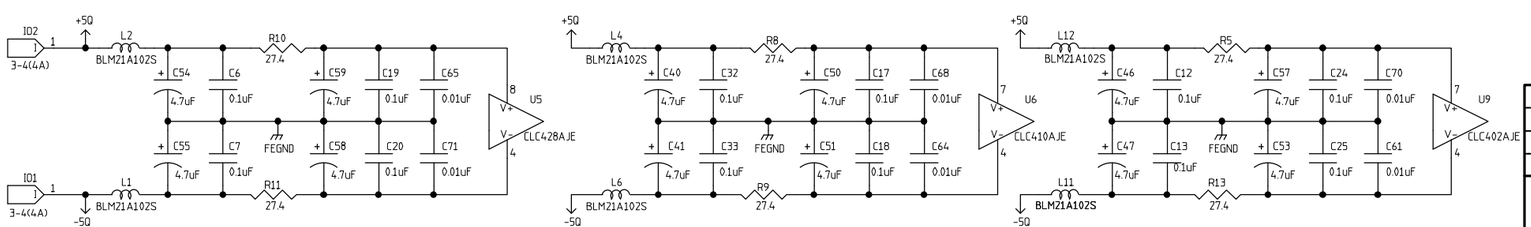

	NAME	DATE
ORIGINATOR	MERLE HALDEMAN	11/13/98
DRAWN	BRUCE MERKEL	11/13/98
CHECKED	TOM CRENNA	1/6/99
APPROVED		

FERMILAB PPD/ETT/ES CDMS (E-891)
ZIP MODULE
SQUID FEEDBACK INTEGRATOR

SIZE	FSCM NO.	DWG. NO.	REV
C			
SCALE		SHEET 3-5	

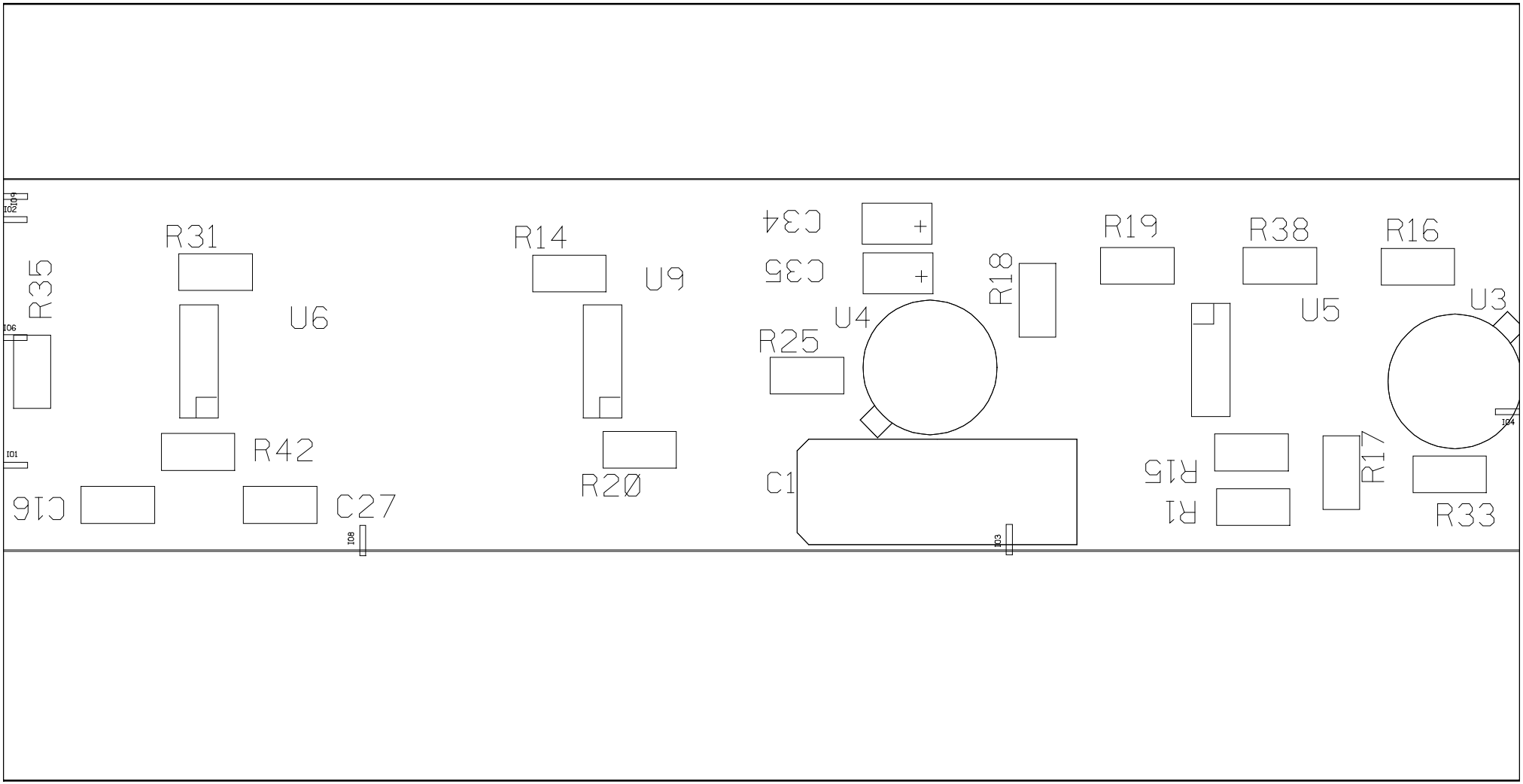
R31
R14
U9
C34
C35
R19
R38
R16
R35
U6
U4
R18
U5
U3
R25
R42
R20
C1
R15
R17
R33
C16
C27
R1

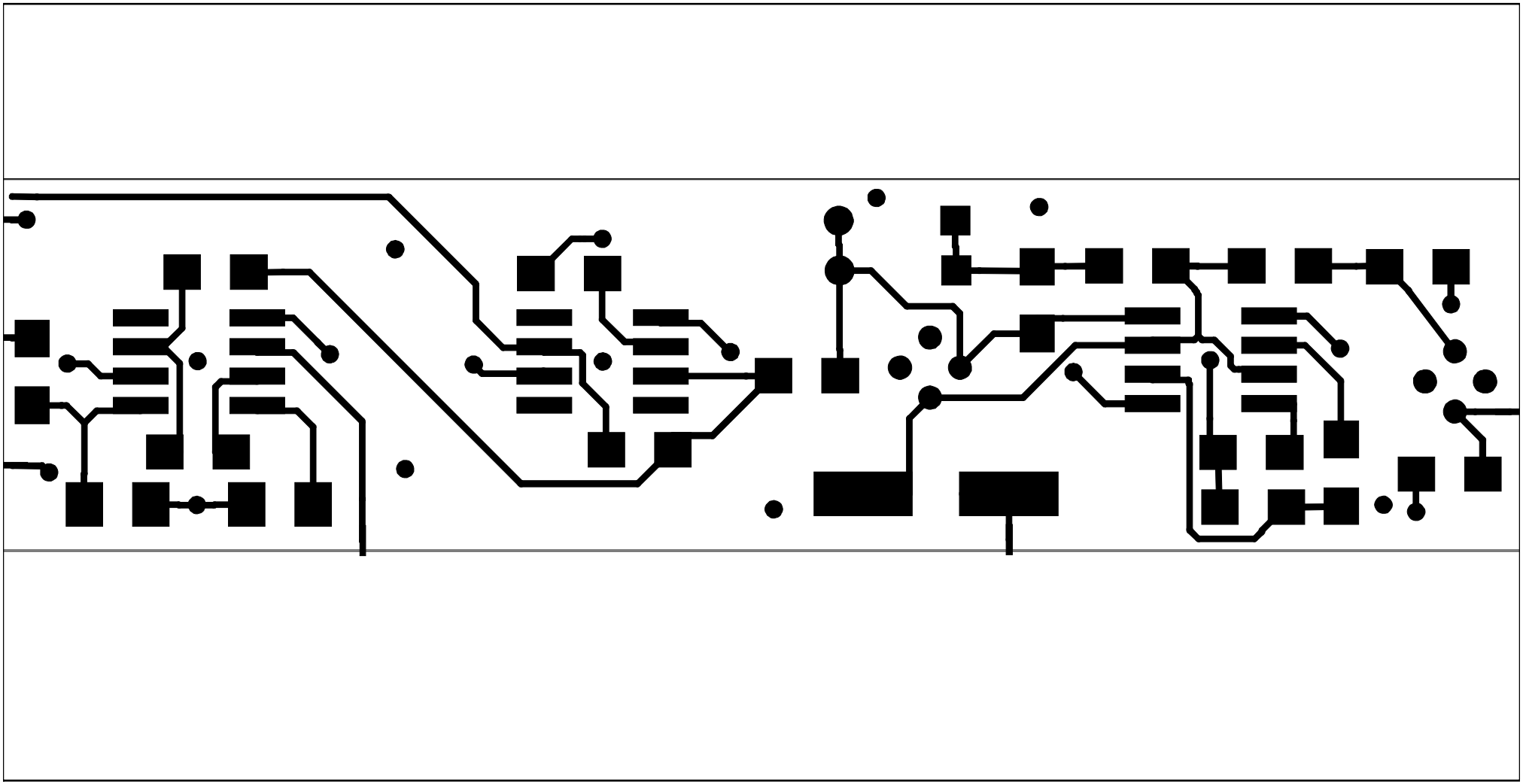

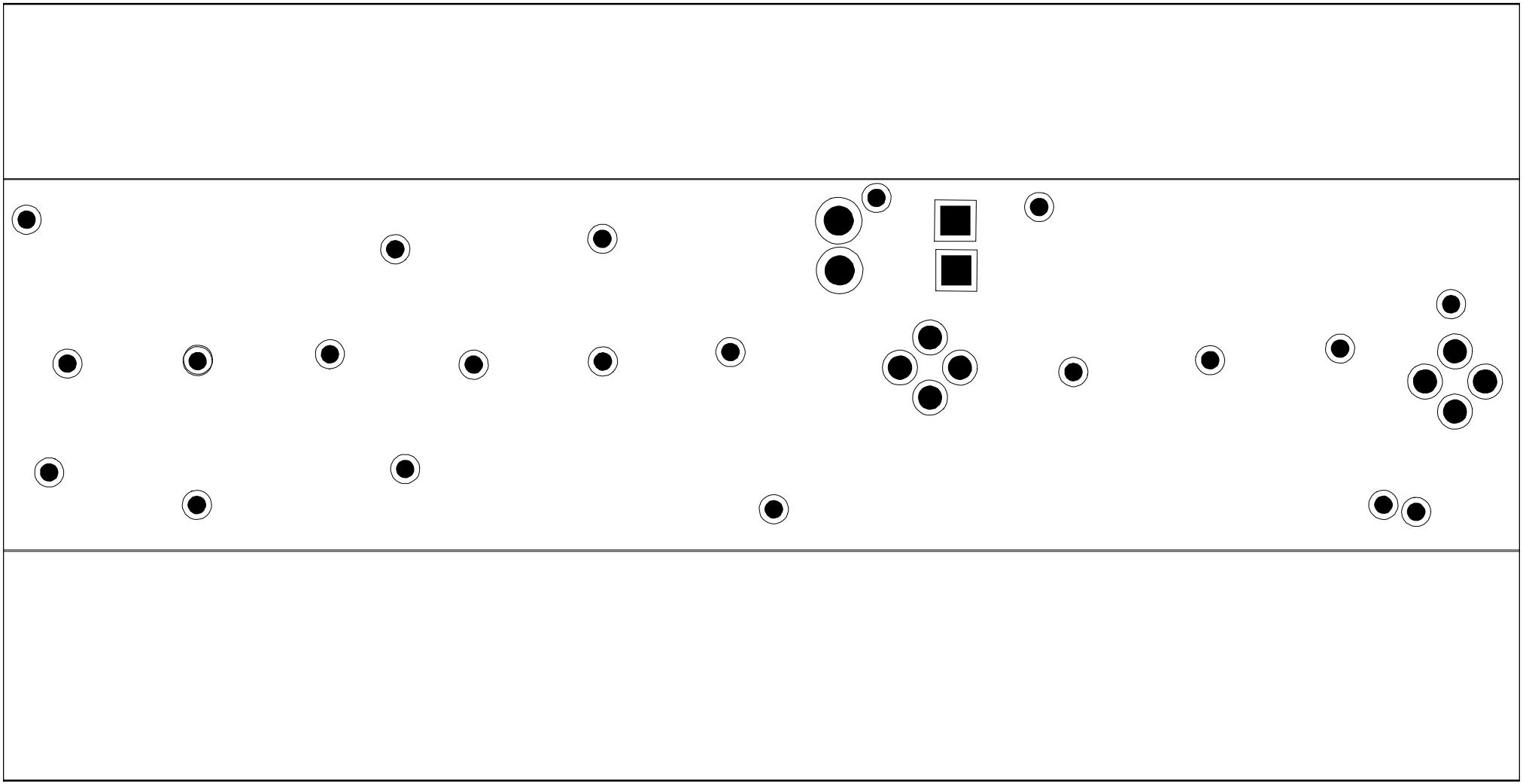

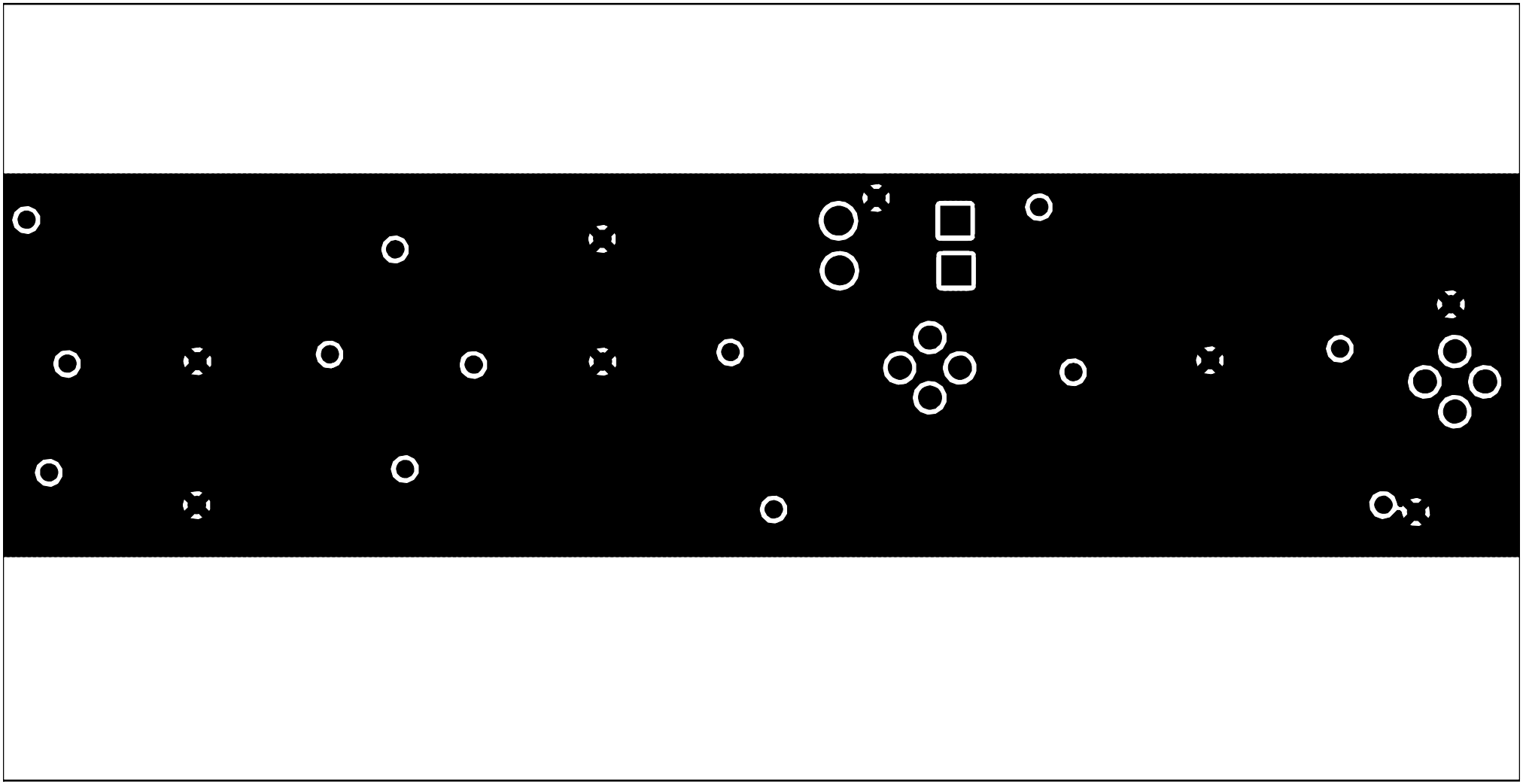

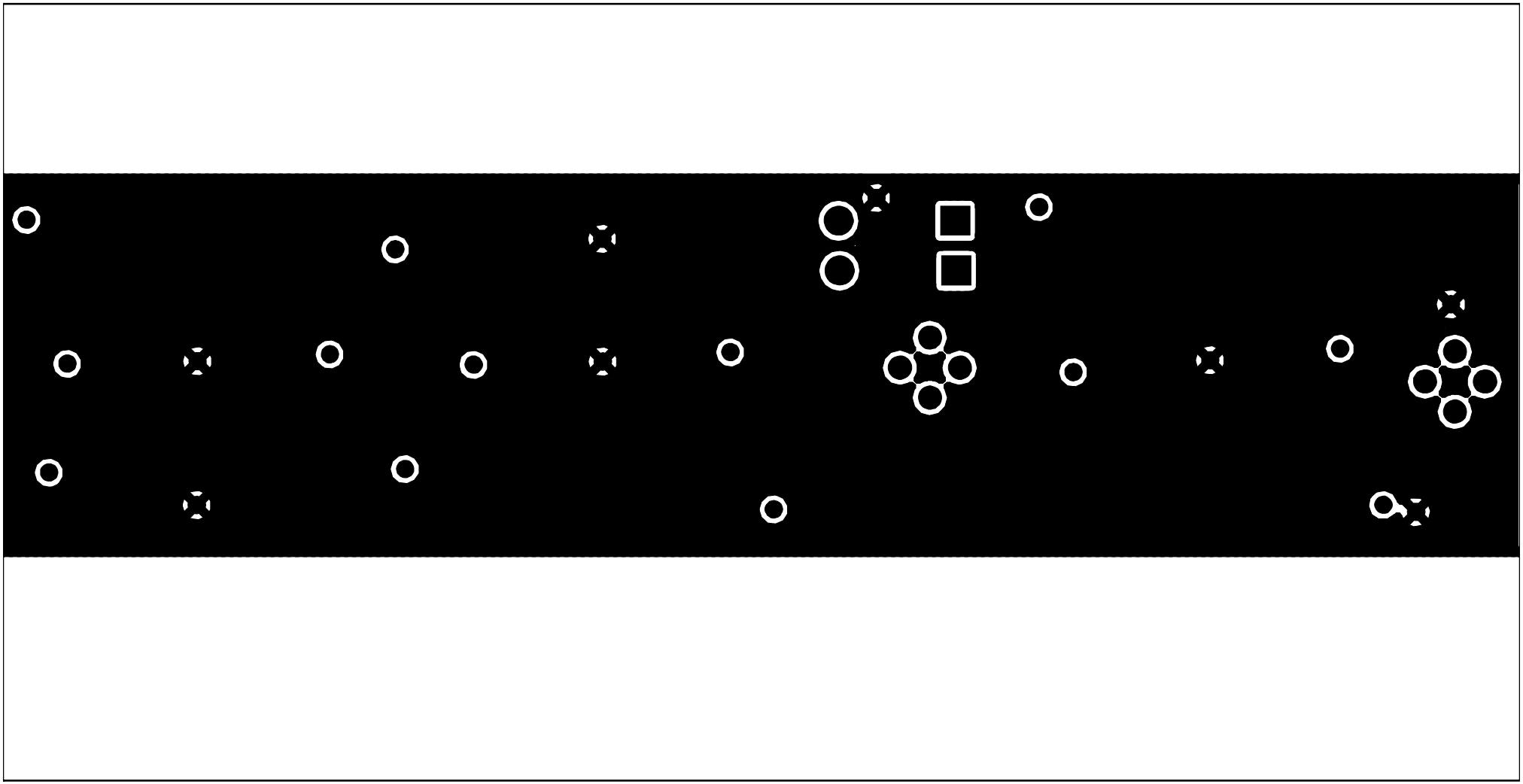

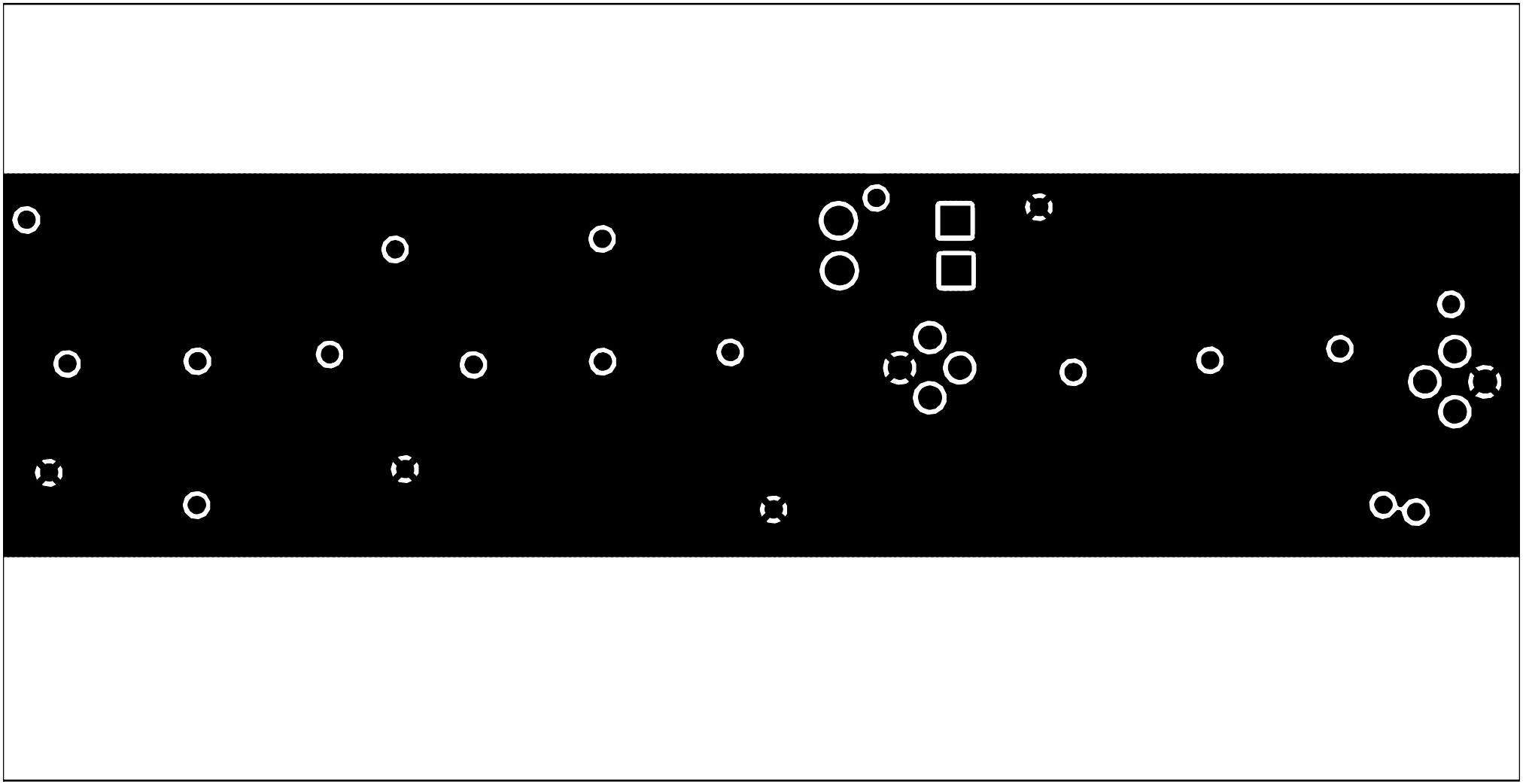

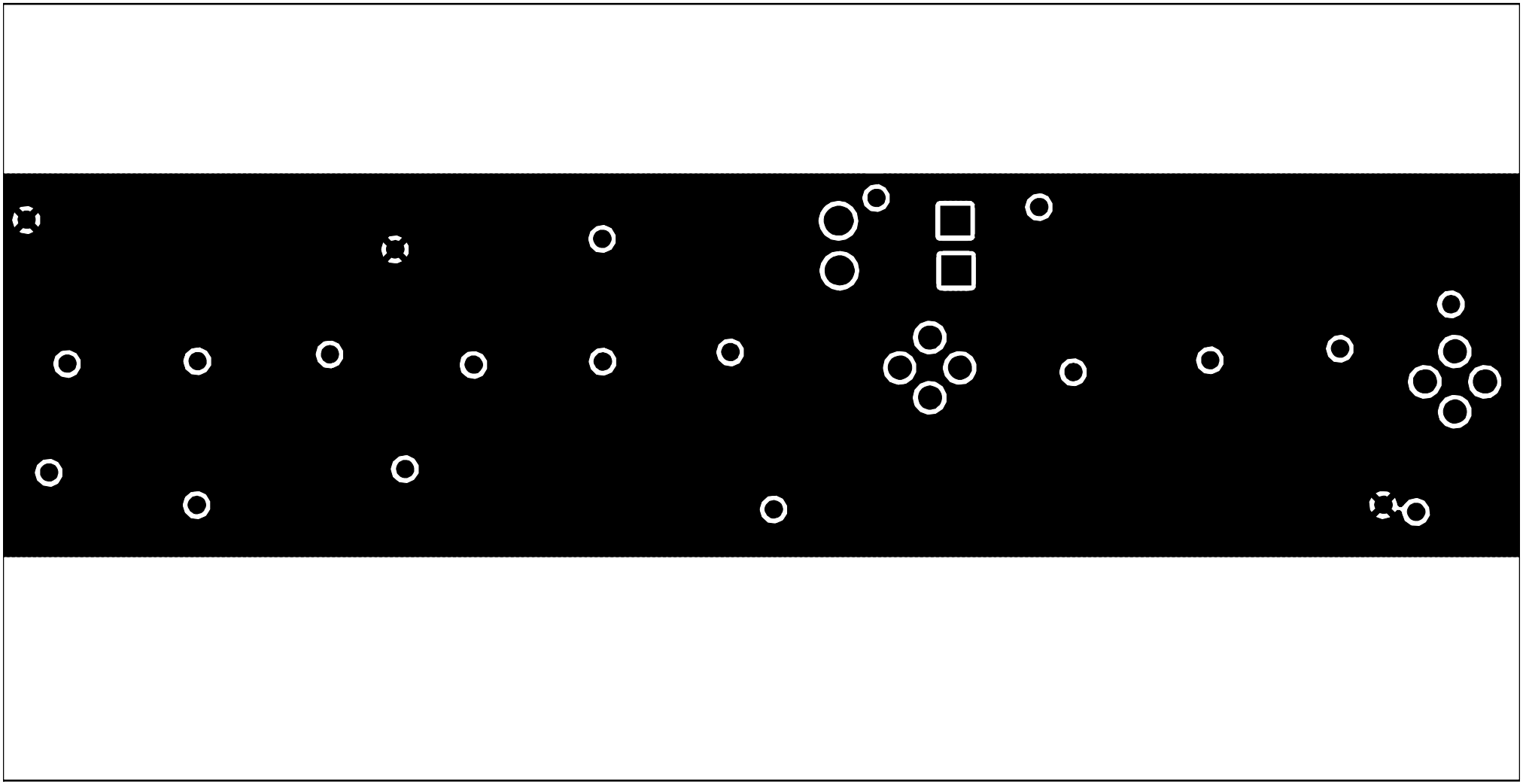

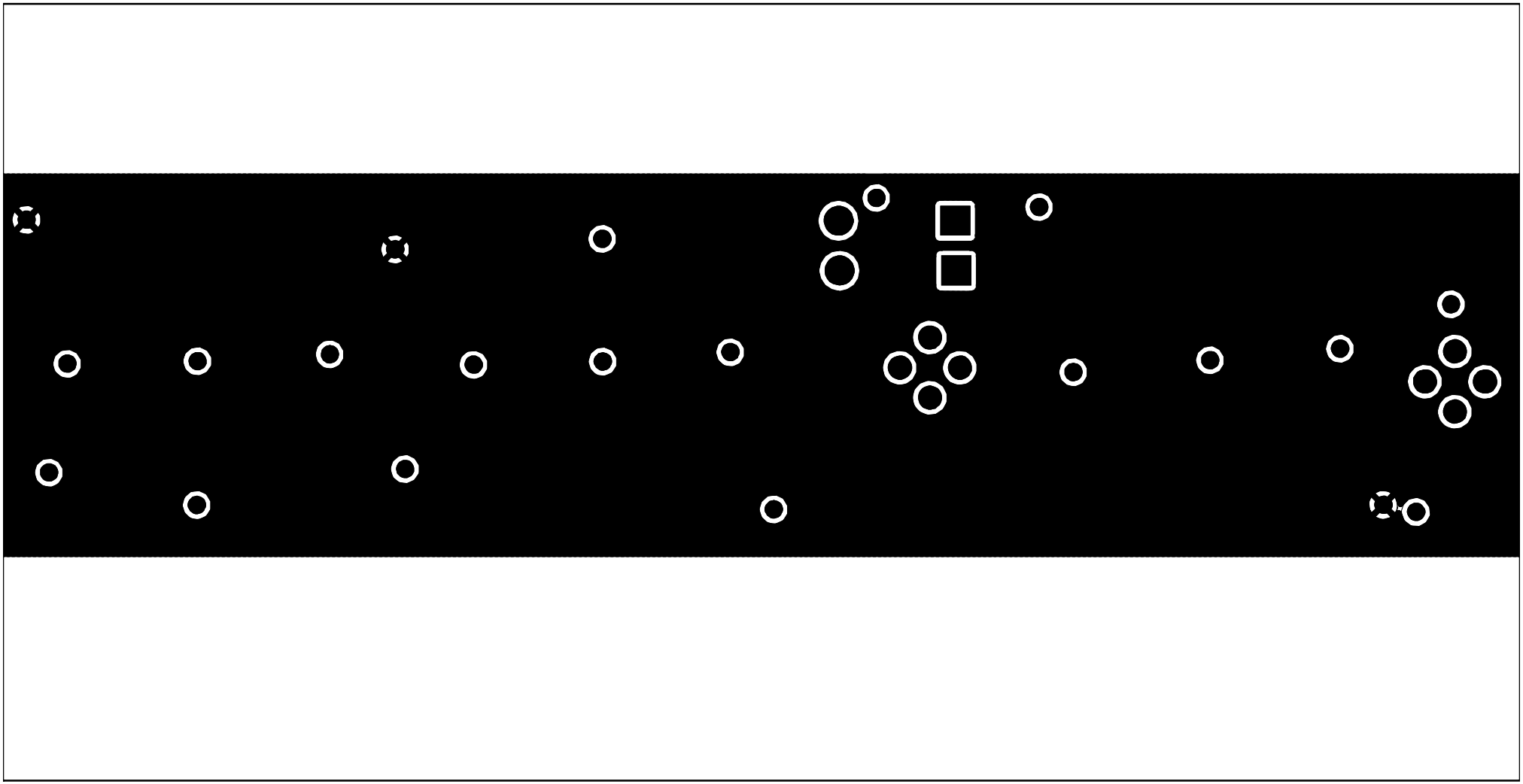

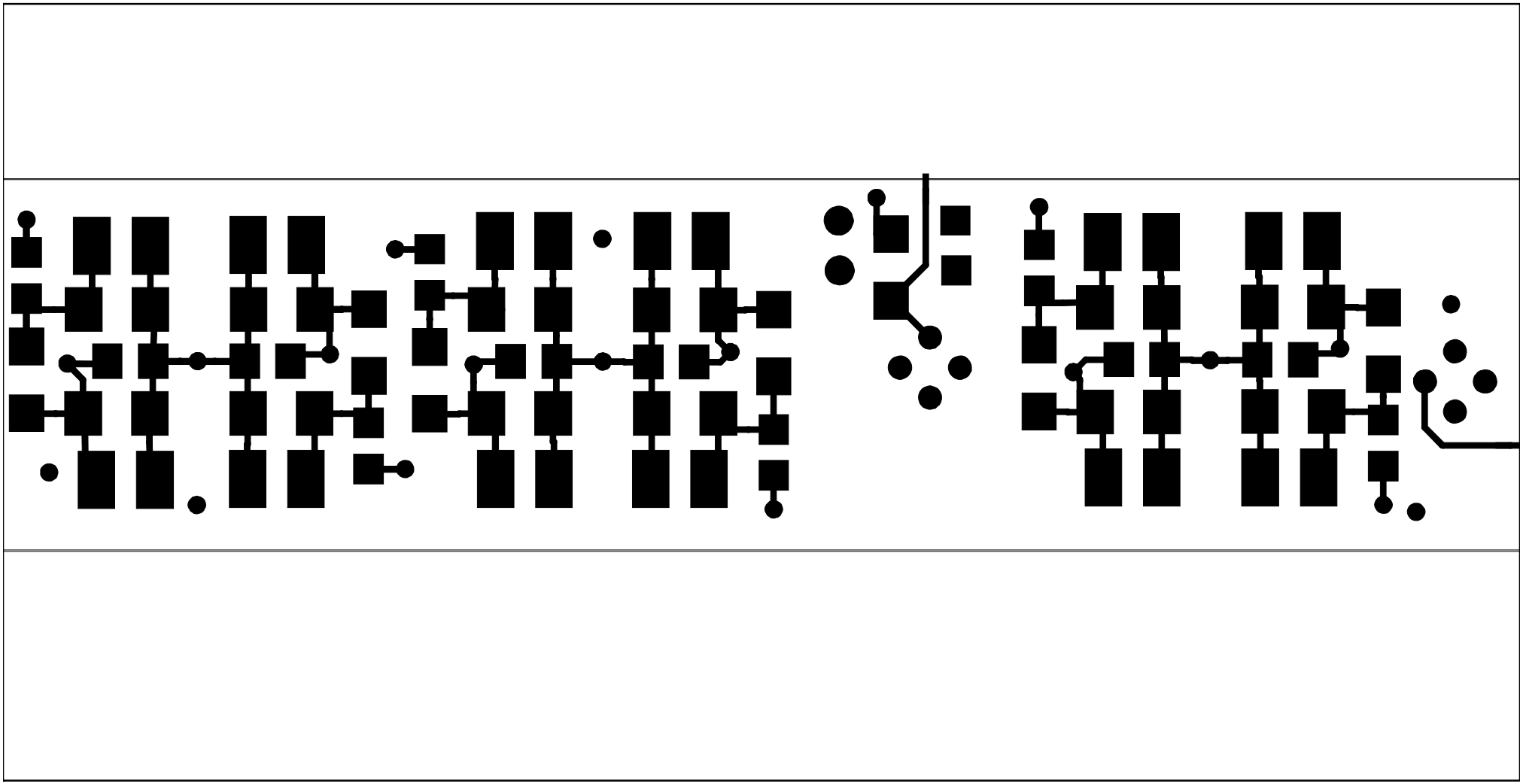

C40
C51
C46
C53
C35
C18
R4
C15
C52
C15
C33
C13
C32
C13
R8
R2
L6
C50
C41
C57
C47
R13
L11
R35
L1
C50
C58
C54
C17
C19
C20
C62
C61
C64
C63
R11
R10
L5
R1