REVISIONS			
REV	DESCRIPTION	DATE	APPROVED

MONITOR SELECTION

AMPLIFIERS

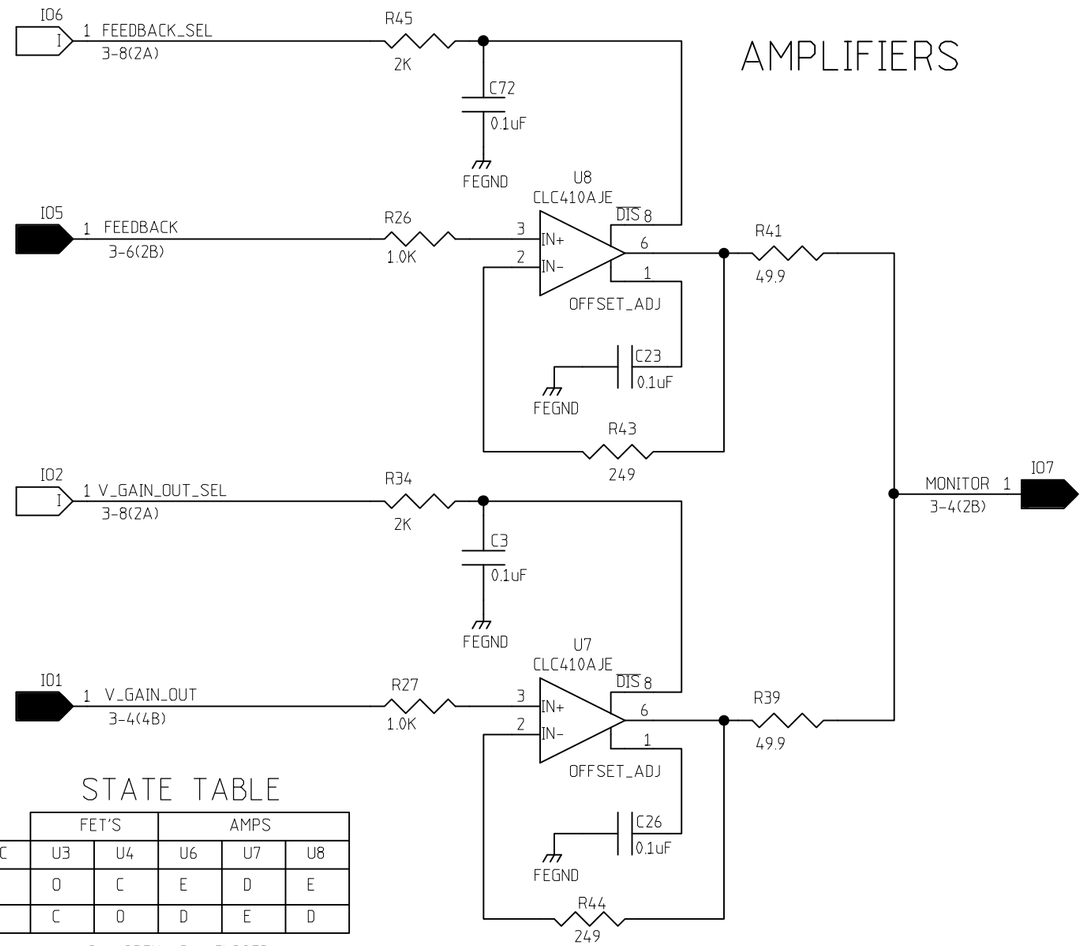

STATE TABLE

	FET'S		AMPS		
FB_O/C	U3	U4	U6	U7	U8
LOW	O	C	E	D	E
HI	C	O	D	E	D

O = OPEN C = CLOSED
E = ENABLE D = DISABLE

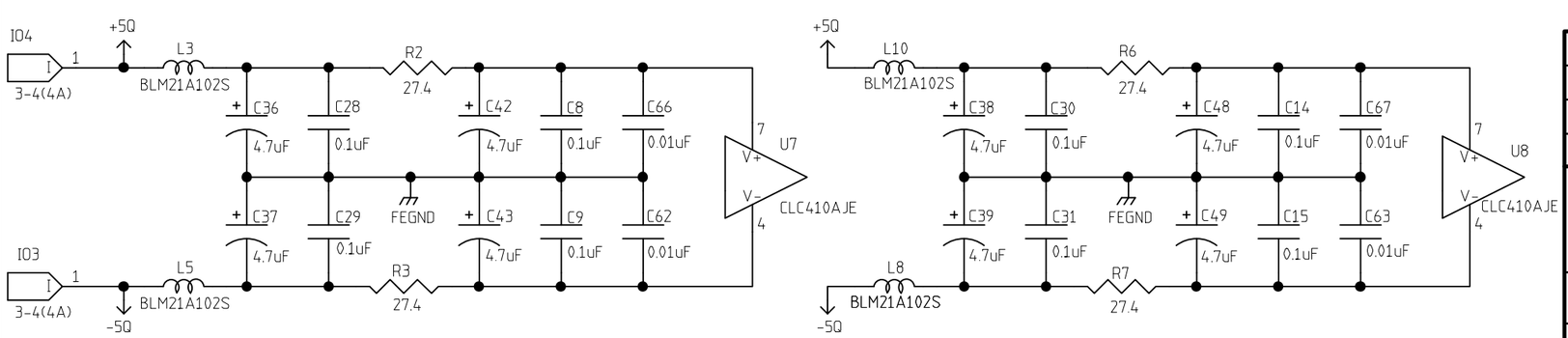

	NAME	DATE
ORIGINATOR	MERLE HALDEMAN	11/13/98
DRAWN	BRUCE MERKEL	11/13/98
CHECKED	TOM CRENNA	1/6/99
APPROVED		

FERMILAB PPD/ETT/ES CDMS (E-891)
ZIP MODULE
SQUID FEEDBACK MONITOR

SIZE	FSCM NO.	DWG. NO.	REV
B			
SCALE		SHEET 3-7	

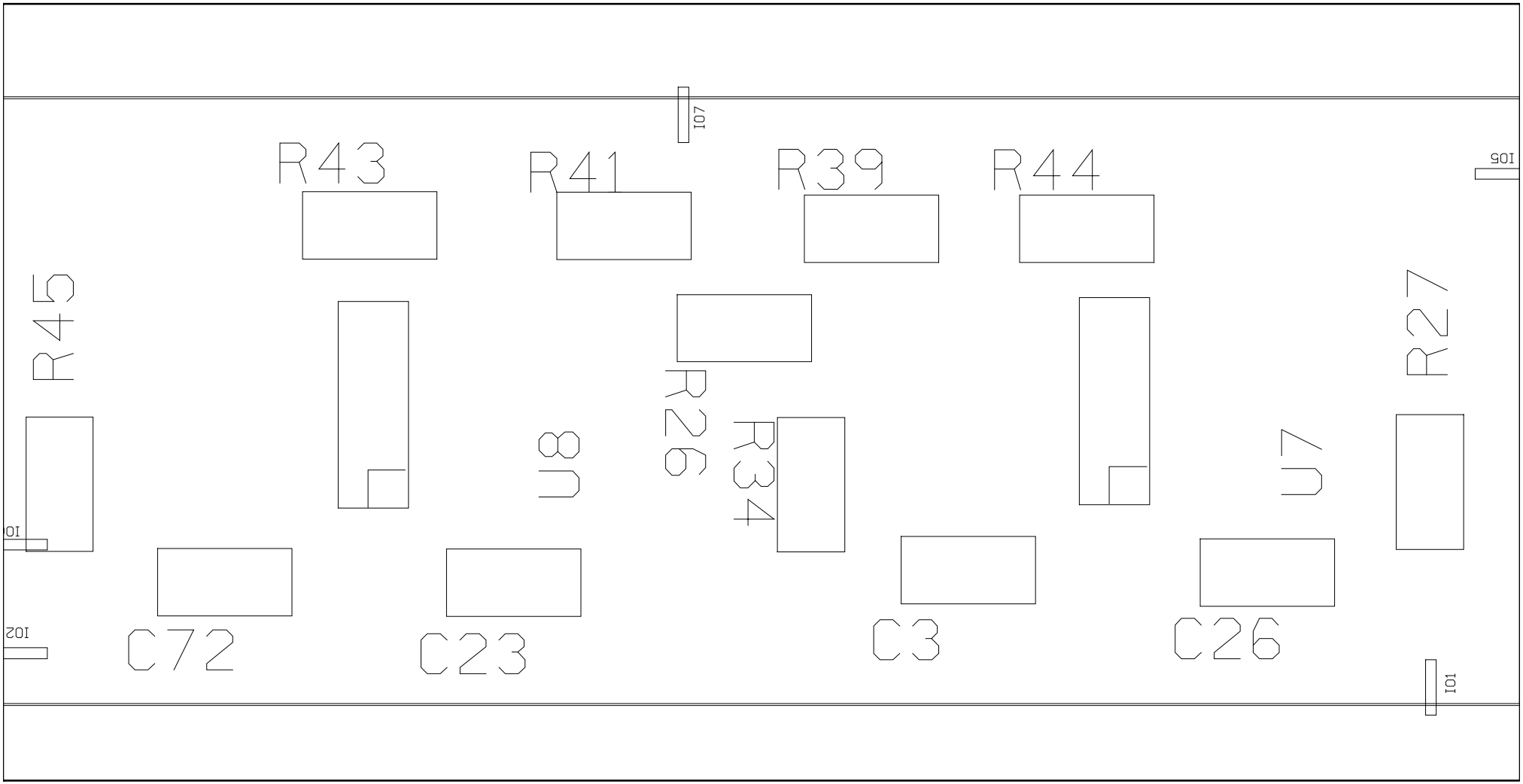
I07
R43
R41
R39
R44
I05
R45
R27
R26
U8
R34
U7
I0
C72
C23
C3
C26
I02
I01

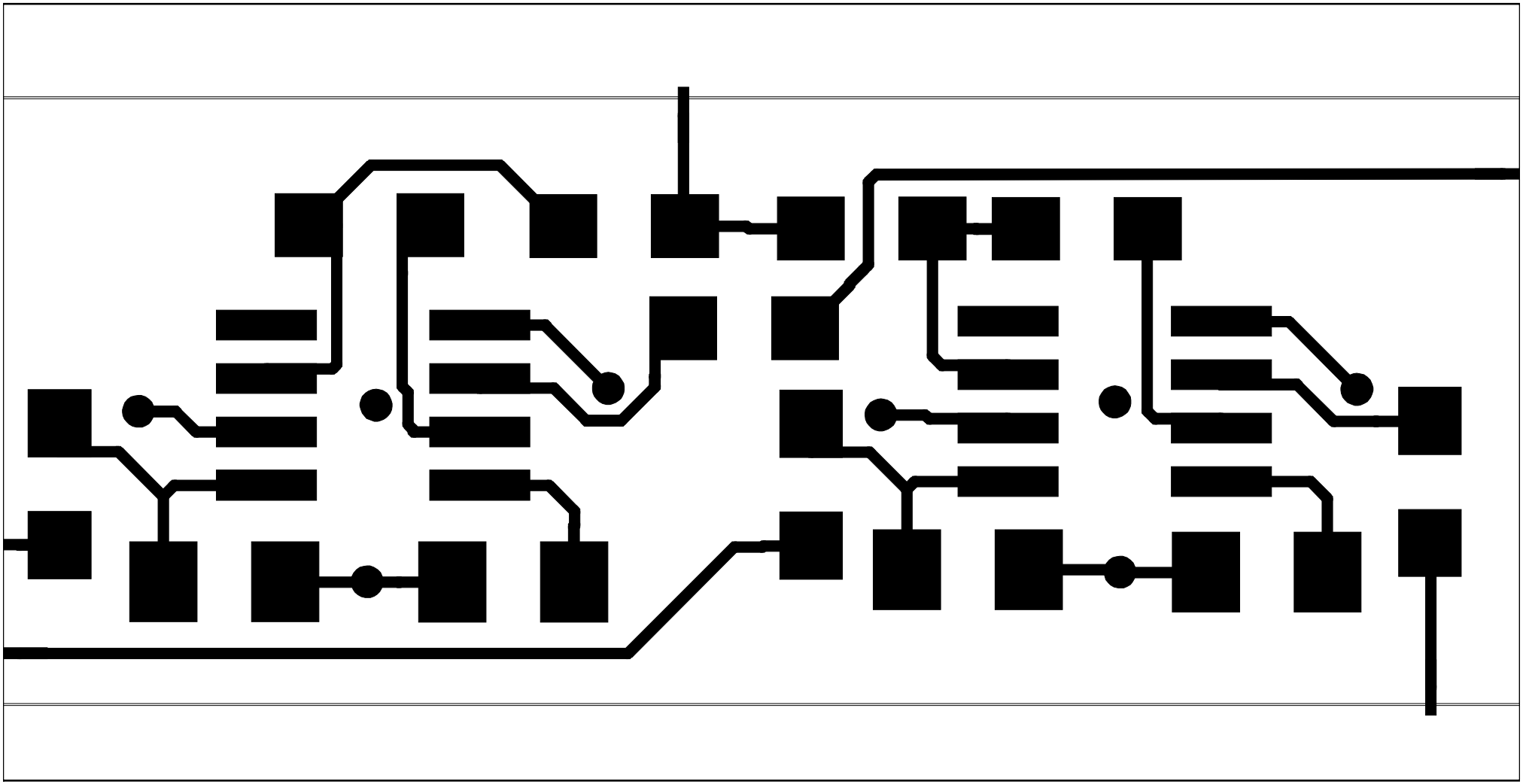

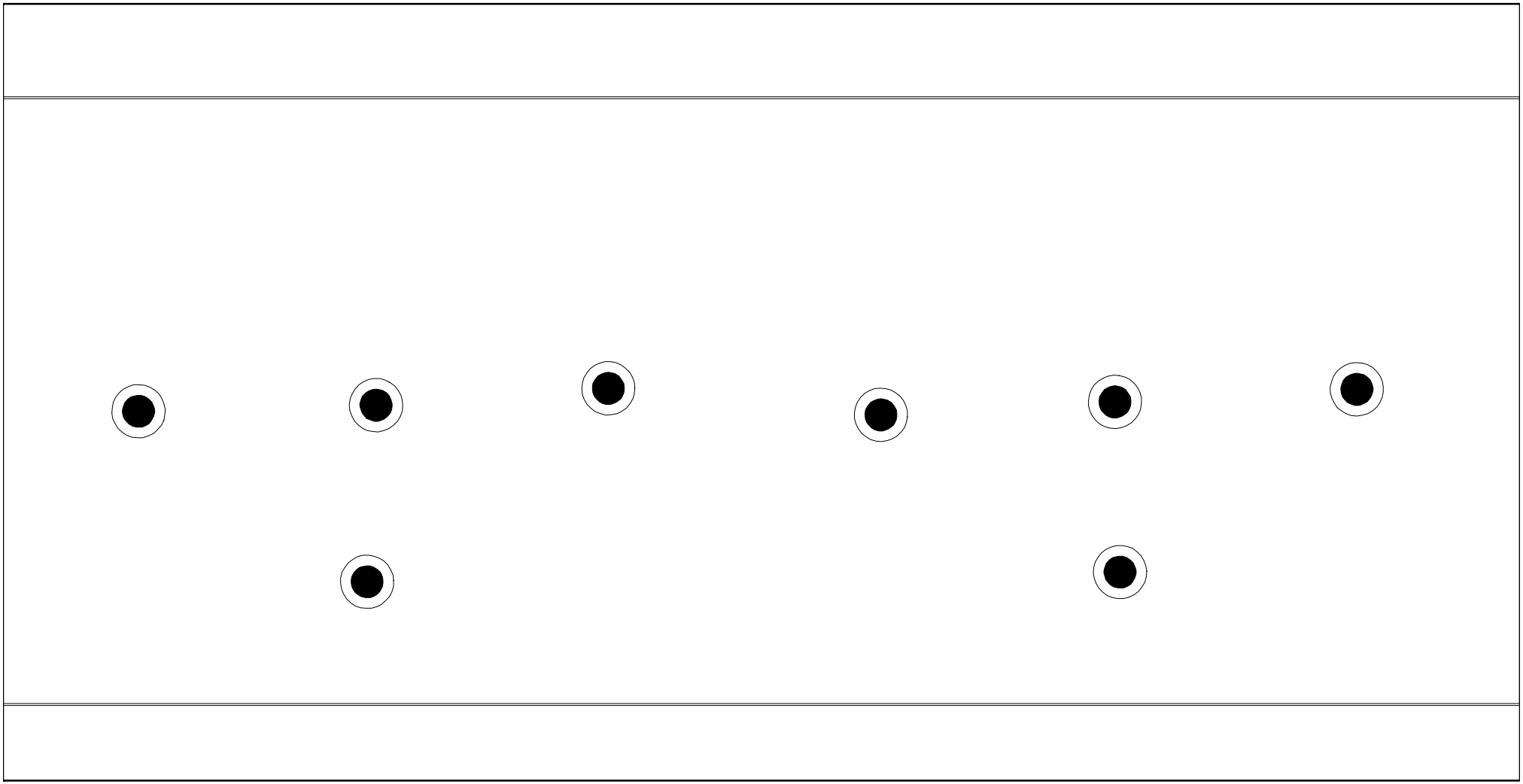

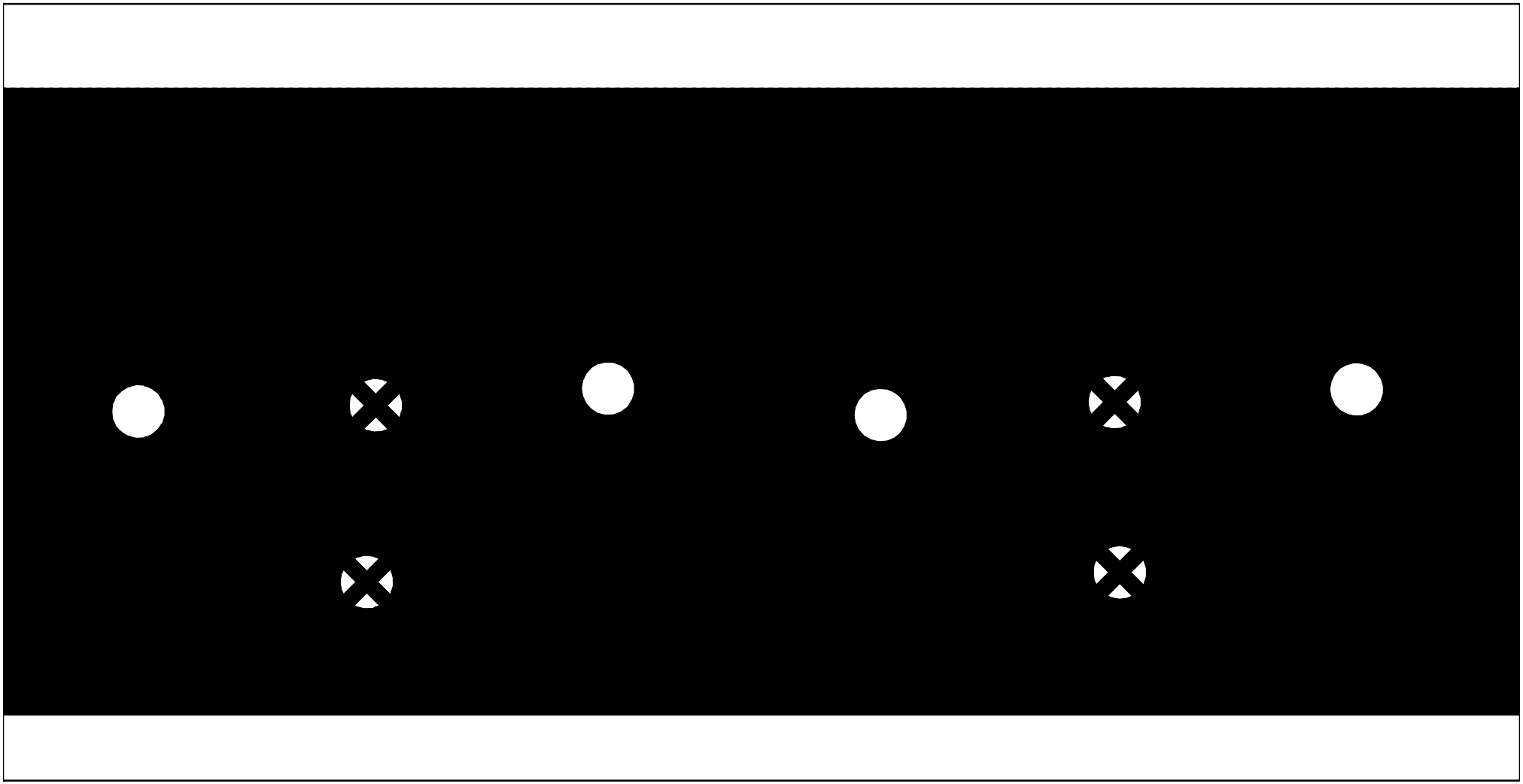

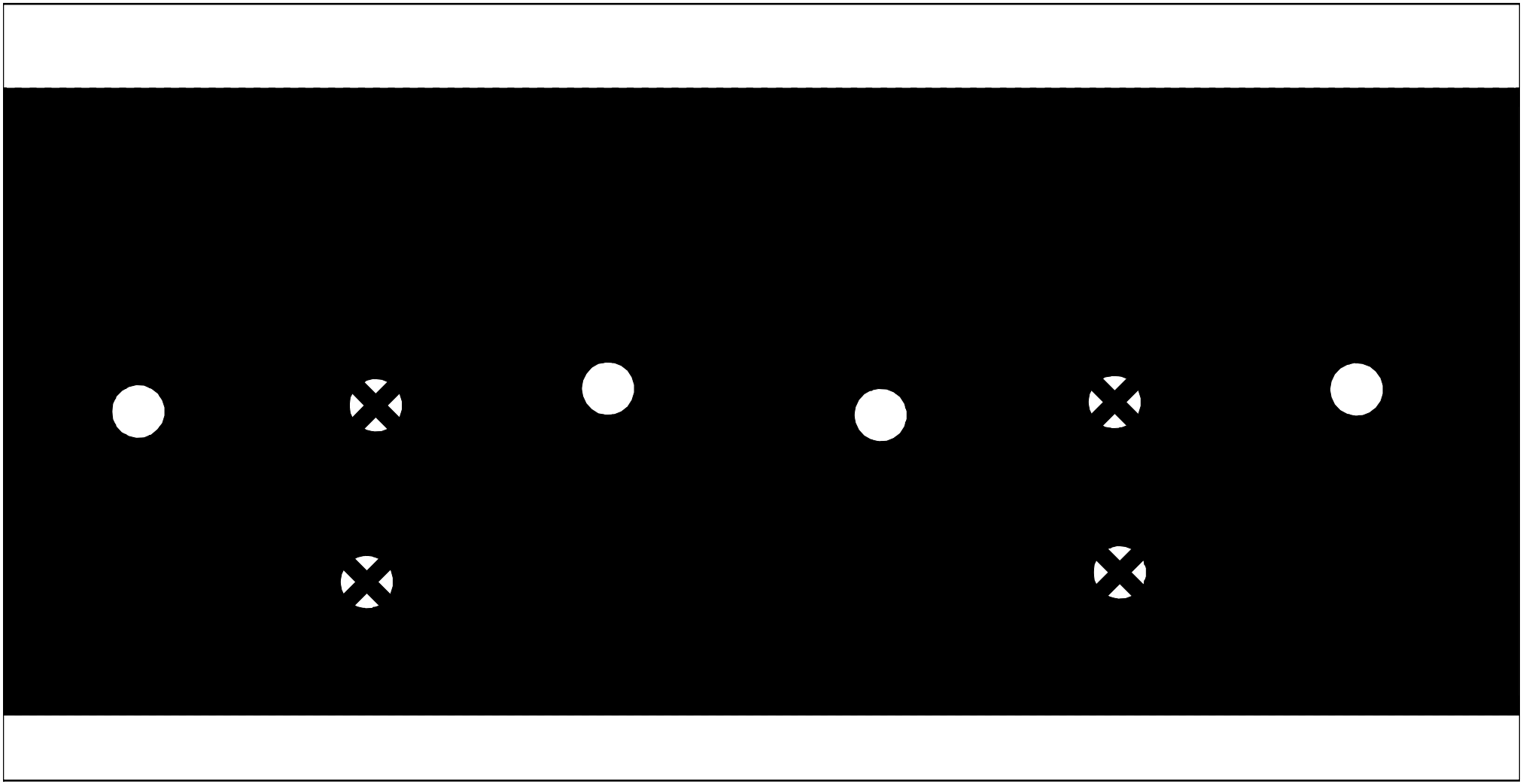

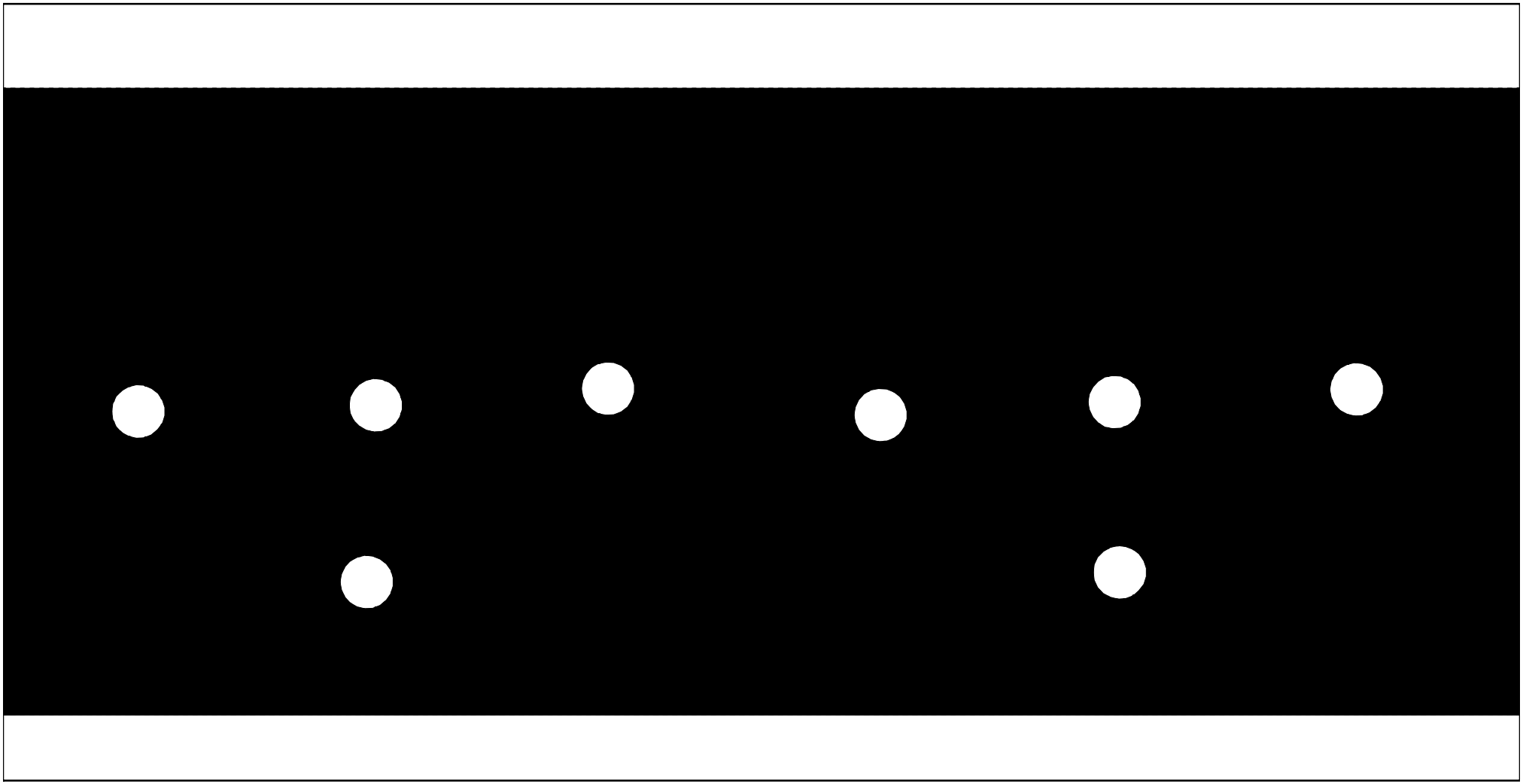

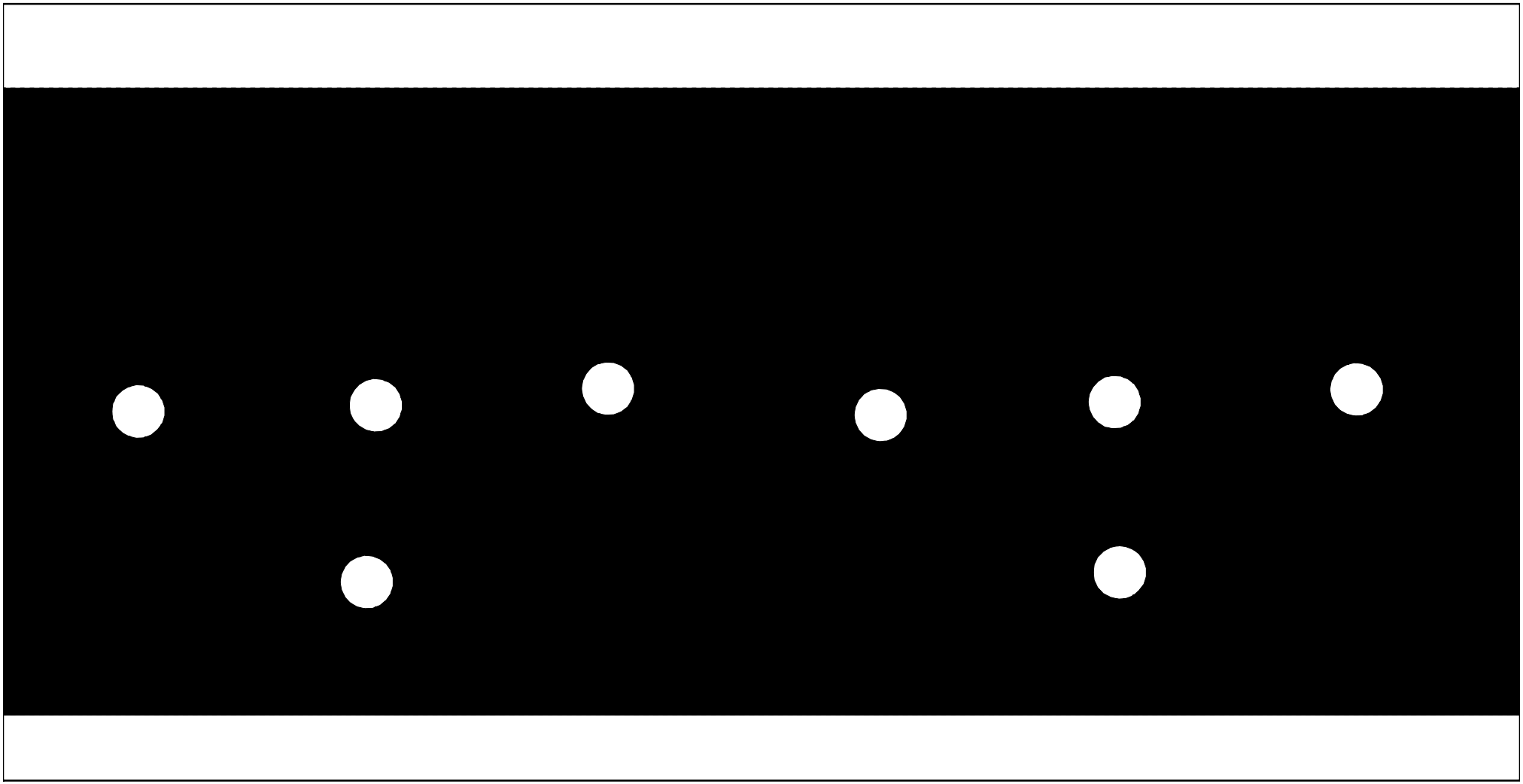

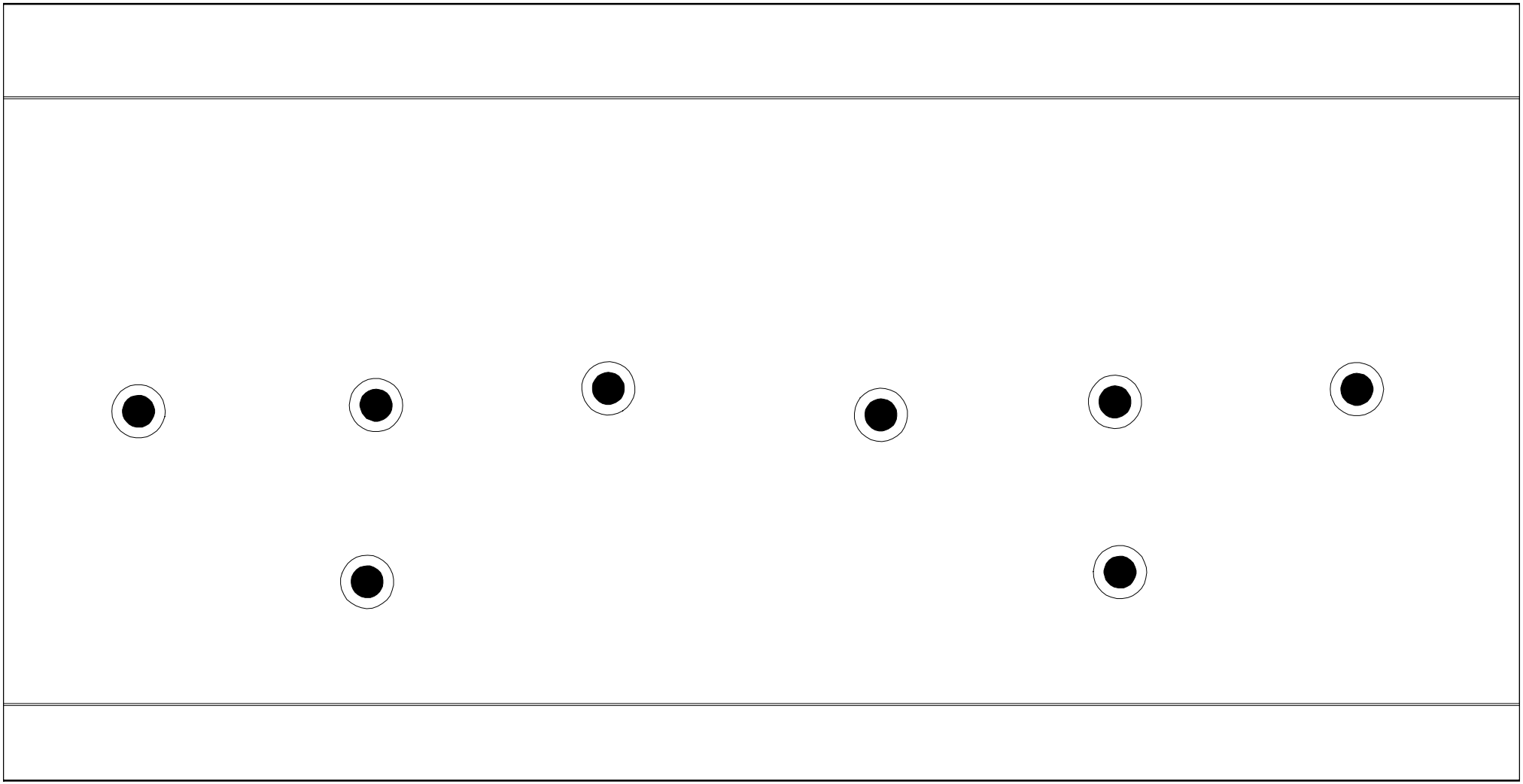

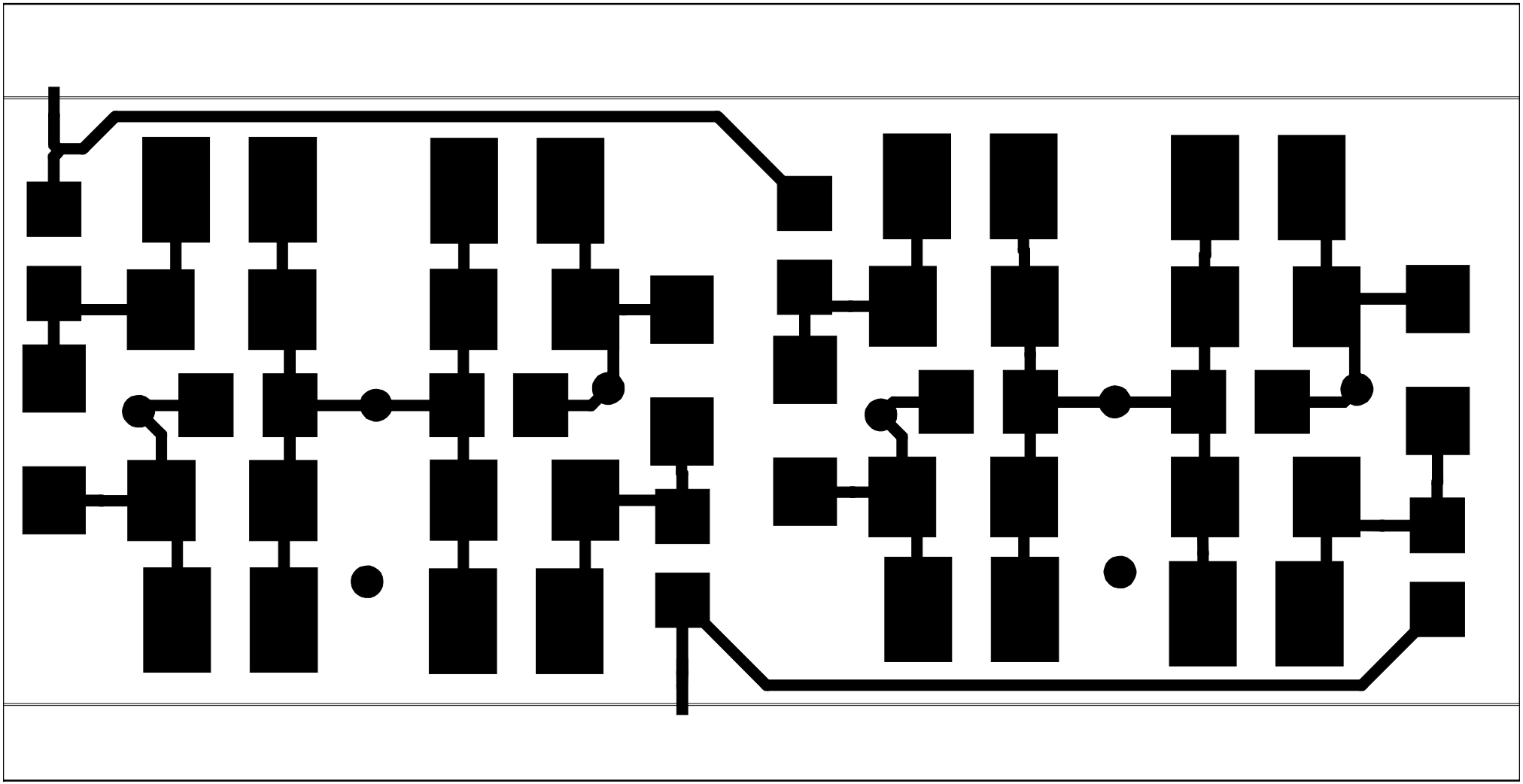

C38
C39
C37
C40
C14
C31
C41
C30
C32
C43
C42
C33
C34
C35
C36
C7
C6
C5
C3
R1
R3
R5
R8
R6
R7
R2
TP4
TP3
TP1