REVISIONS			
REV	DESCRIPTION	DATE	APPROVED

POLARITY SELECTION

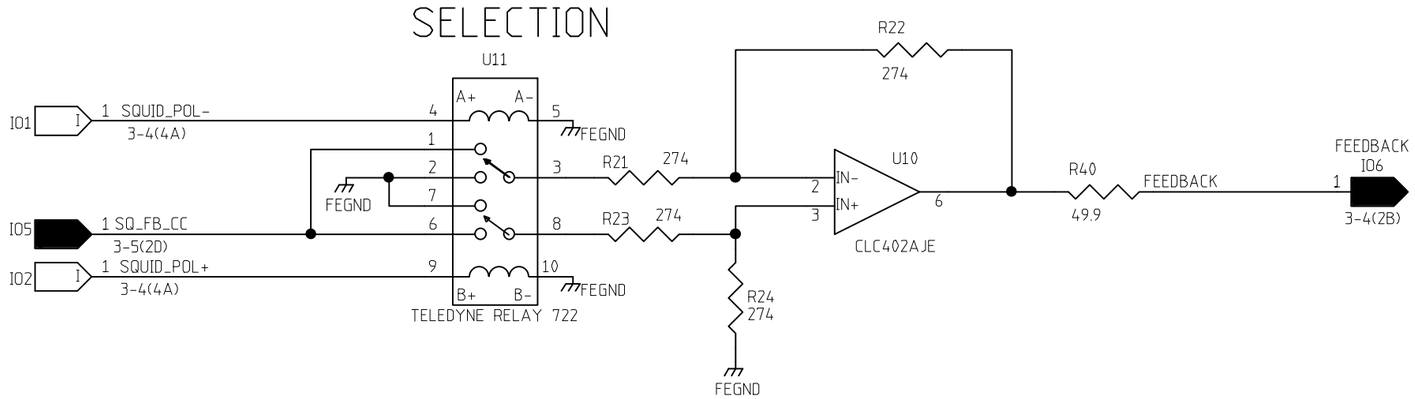

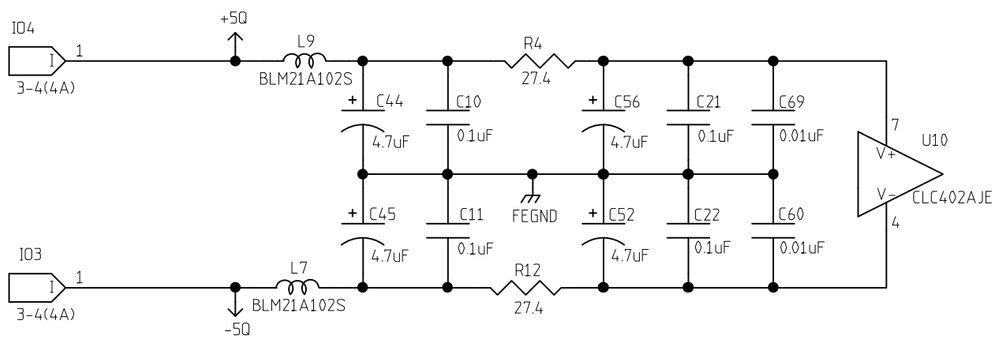

	NAME	DATE
ORIGINATOR	MERLE HALDEMAN	11/13/98
DRAWN	BRUCE MERKEL	11/13/98
CHECKED	TOM CRENNA	1/6/99
APPROVED		

FERMILAB PPD/ETT/ES CDMS (E-891)
ZIP MODULE
SQUID FEEDBACK POLARITY

SIZE	FSCM NO.	DWG. NO.	REV
B			
SCALE		SHEET 3-6	

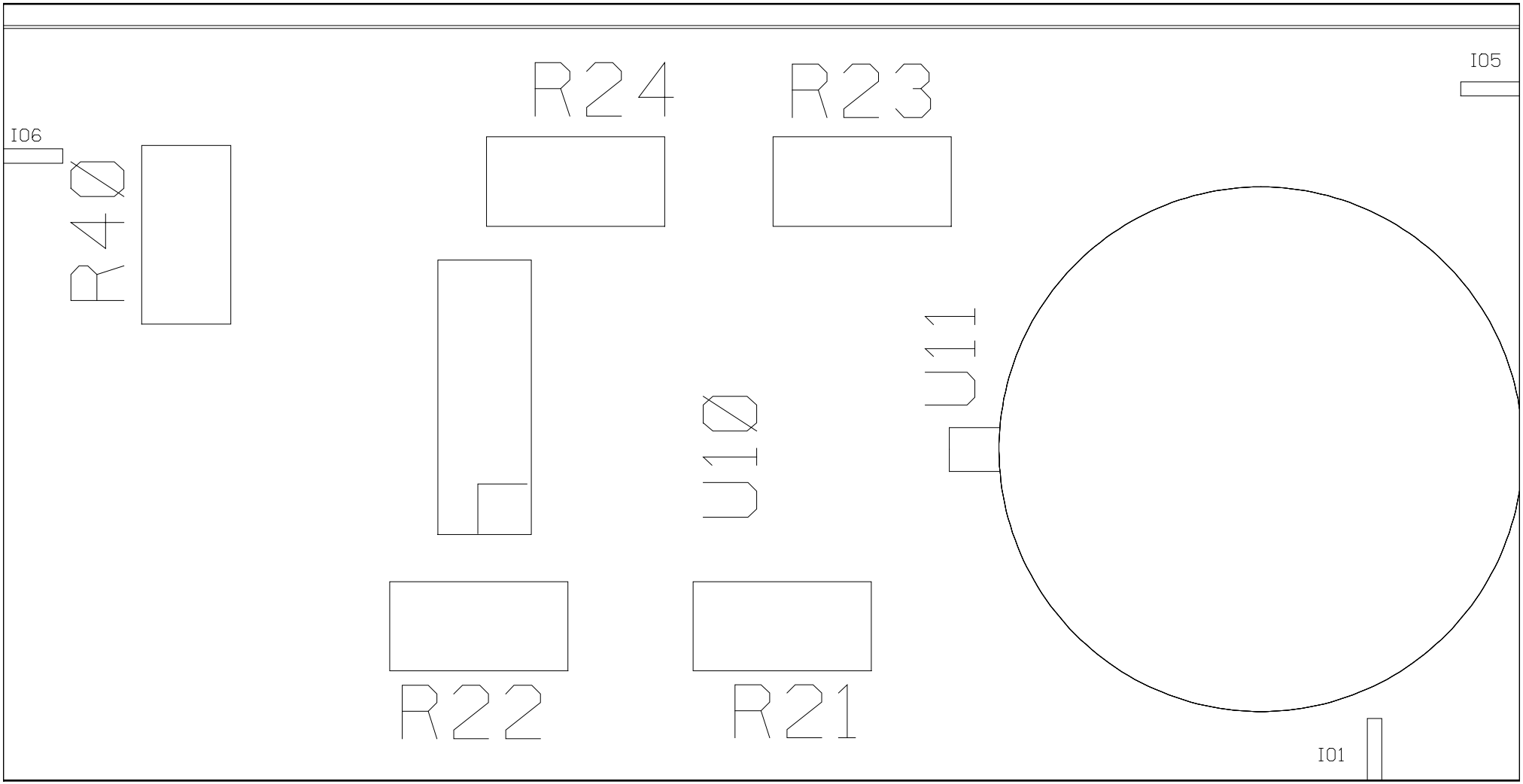
R24
R23
I05
I06
R40
U11
U10
R22
R21
I01

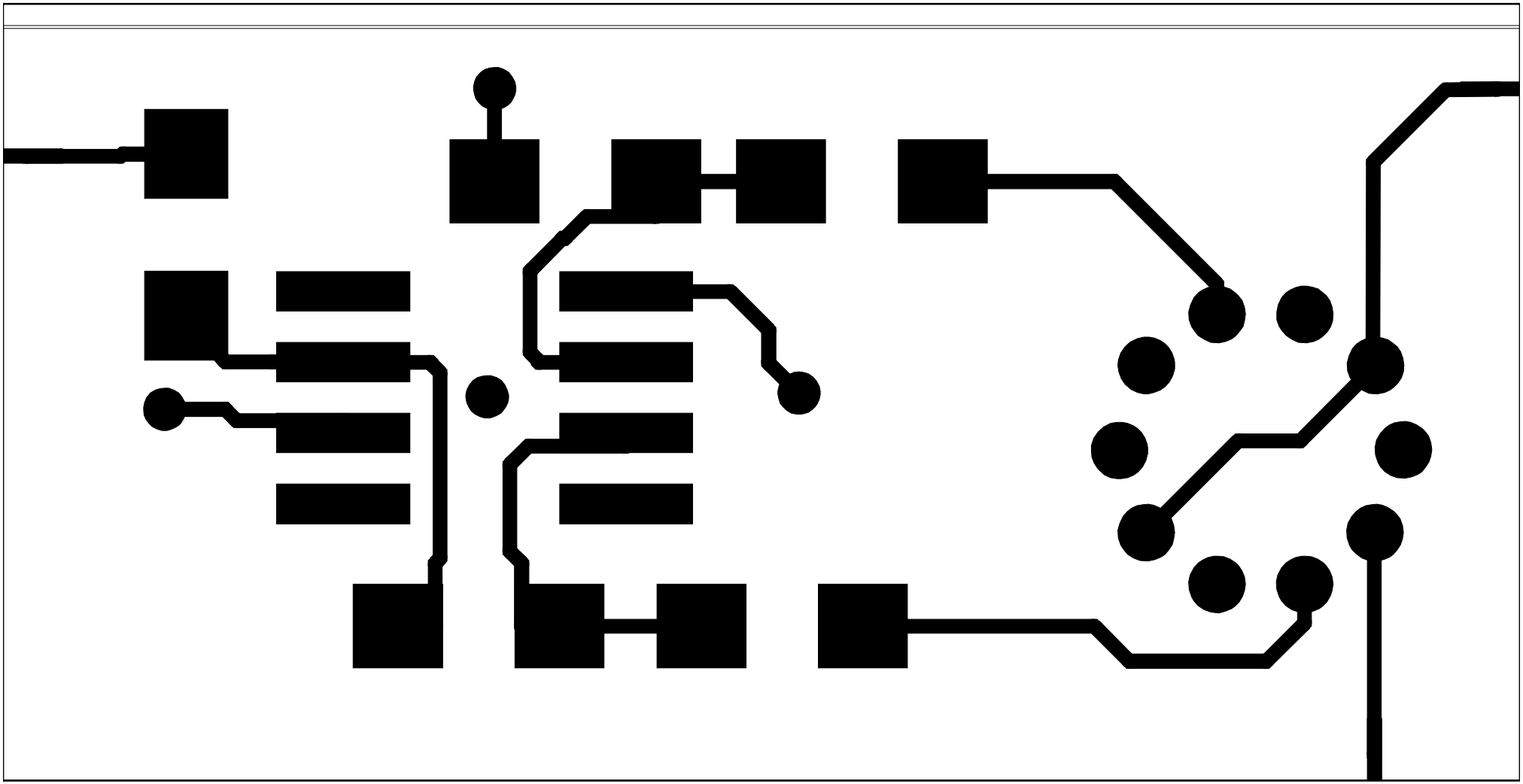

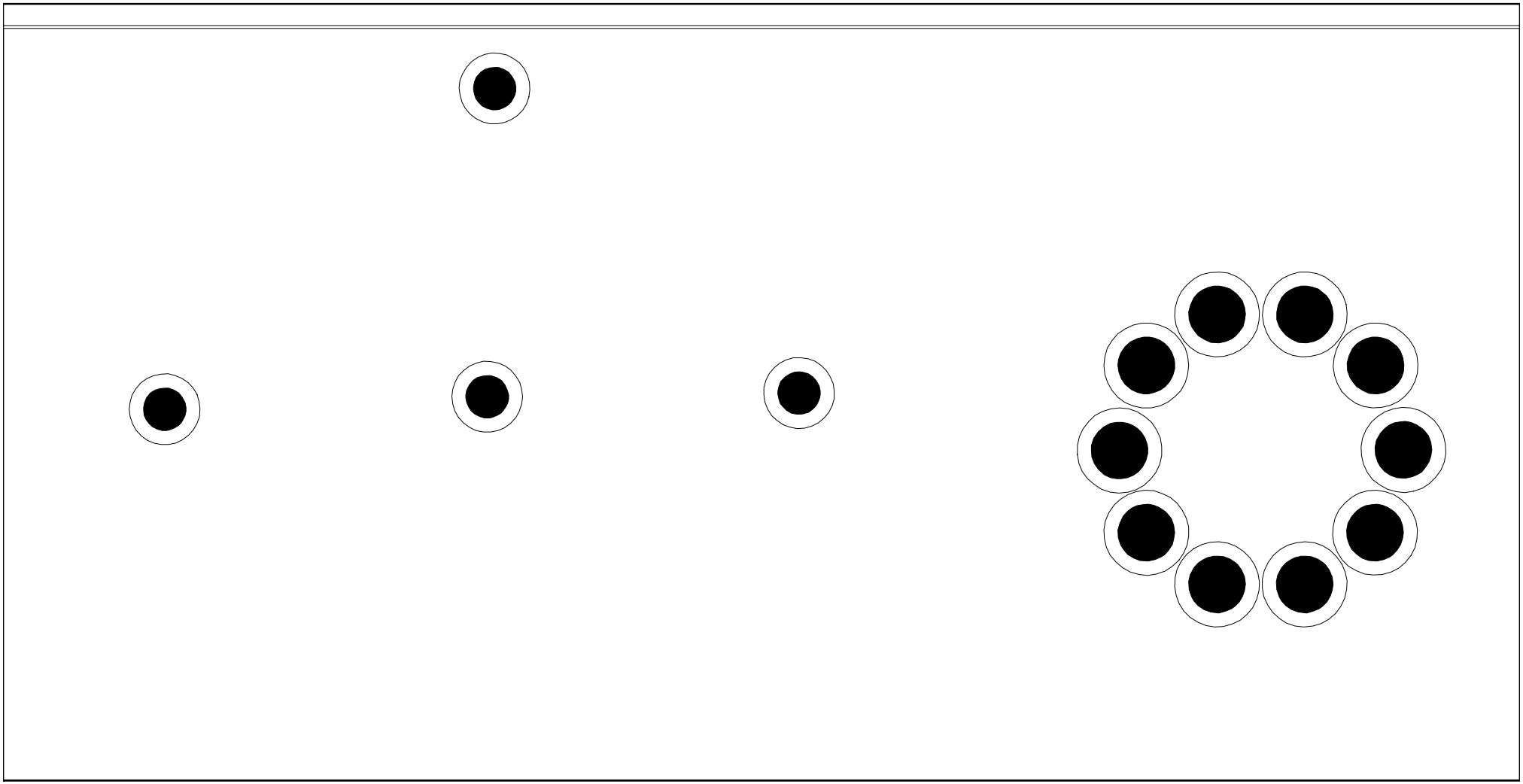

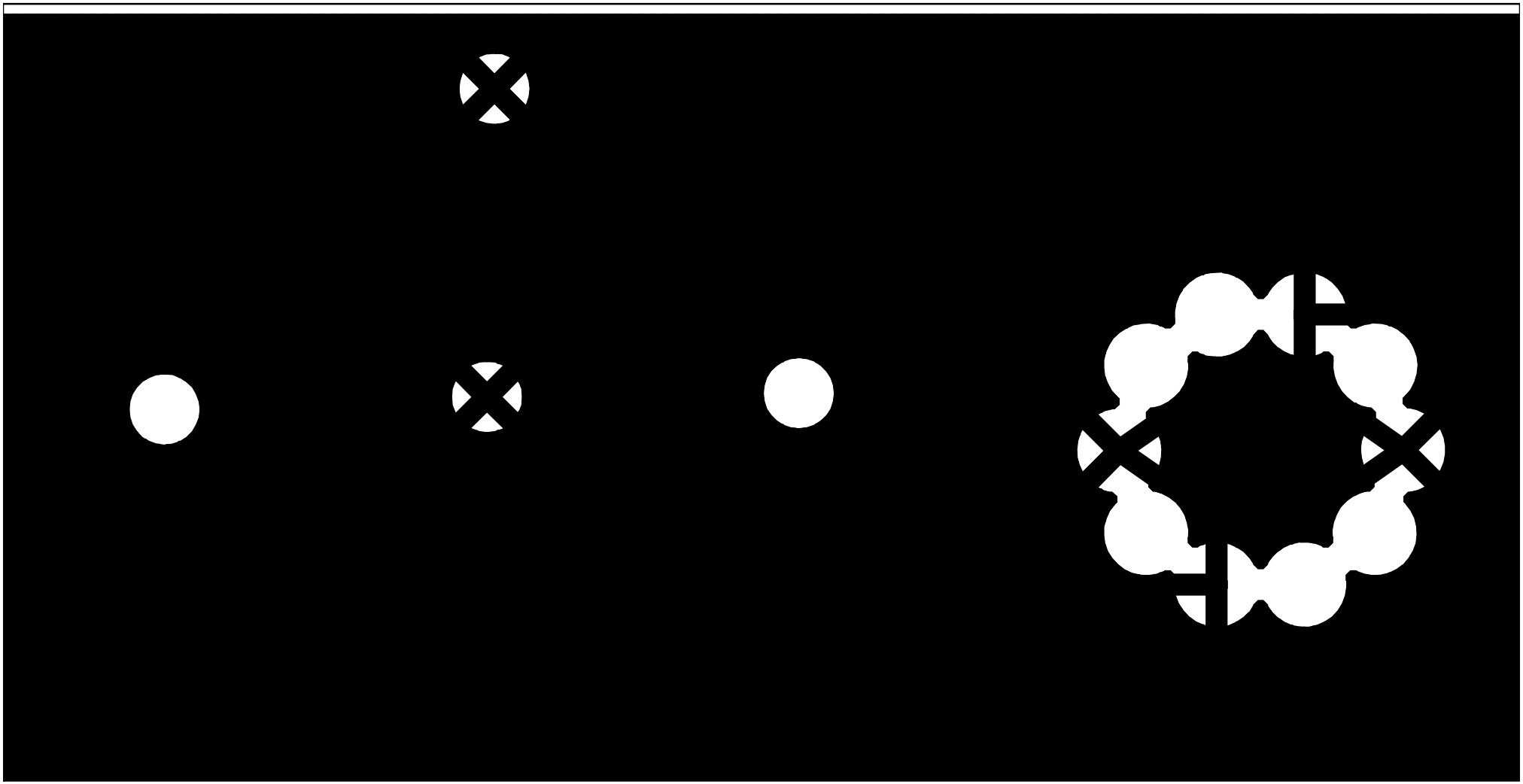

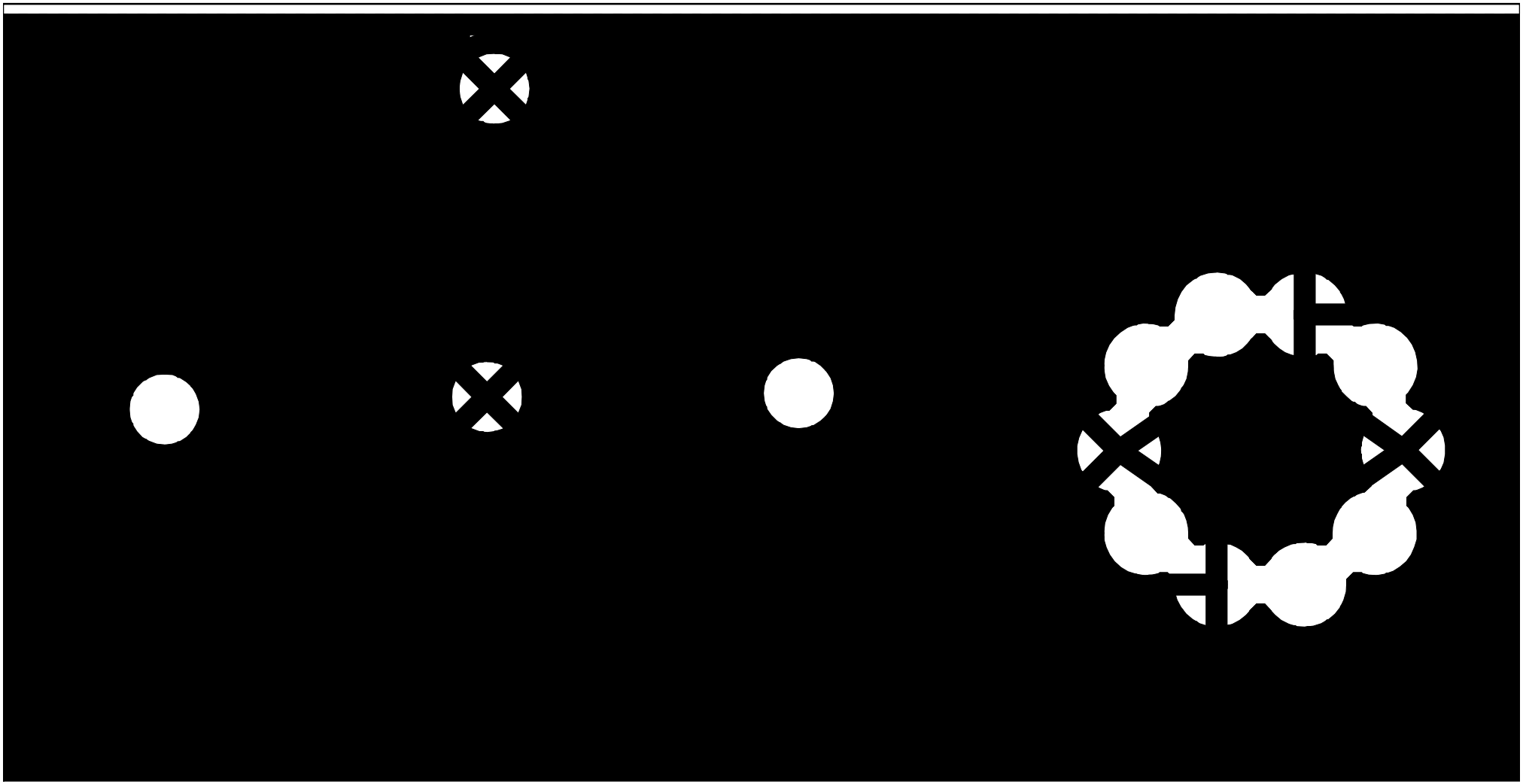

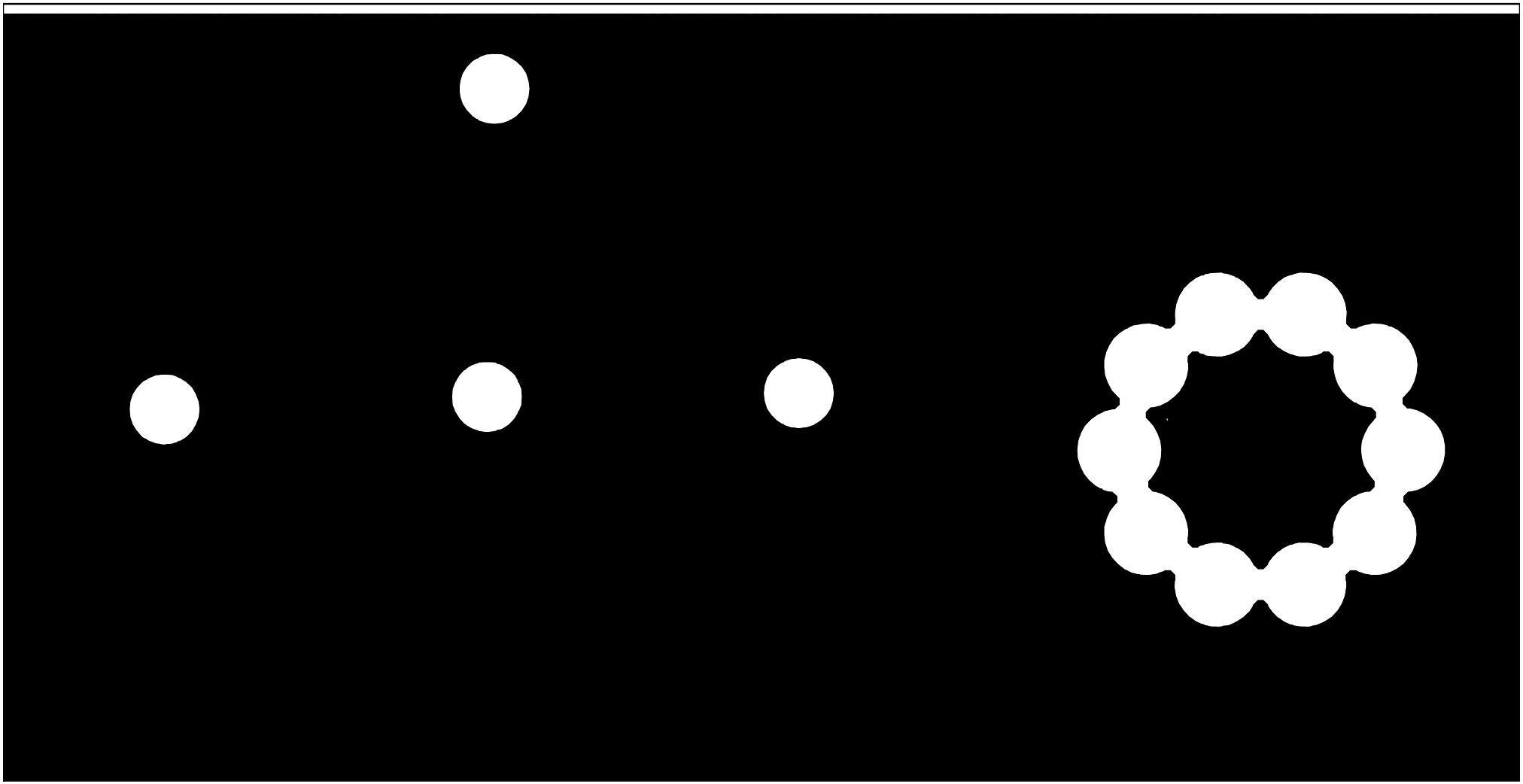

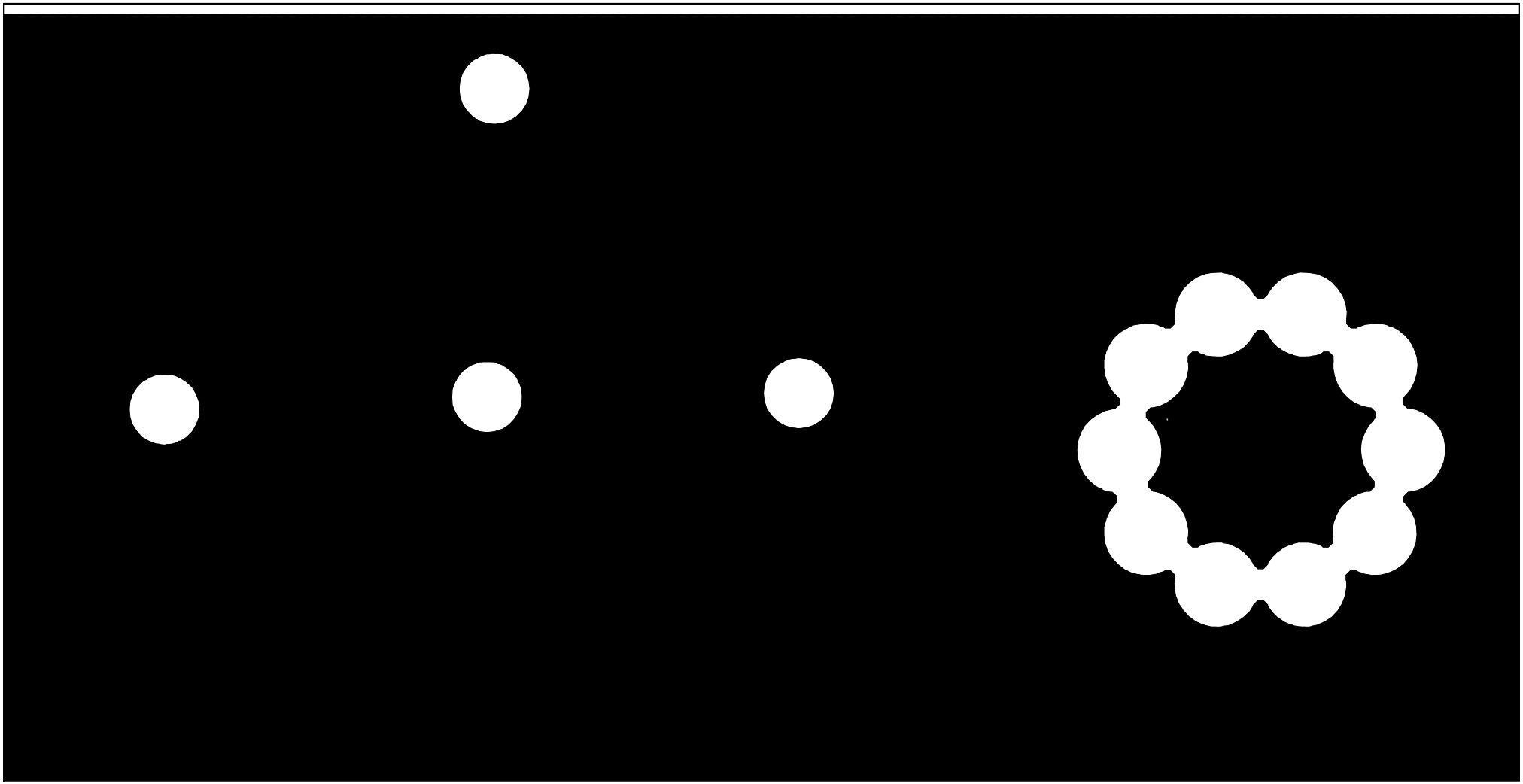

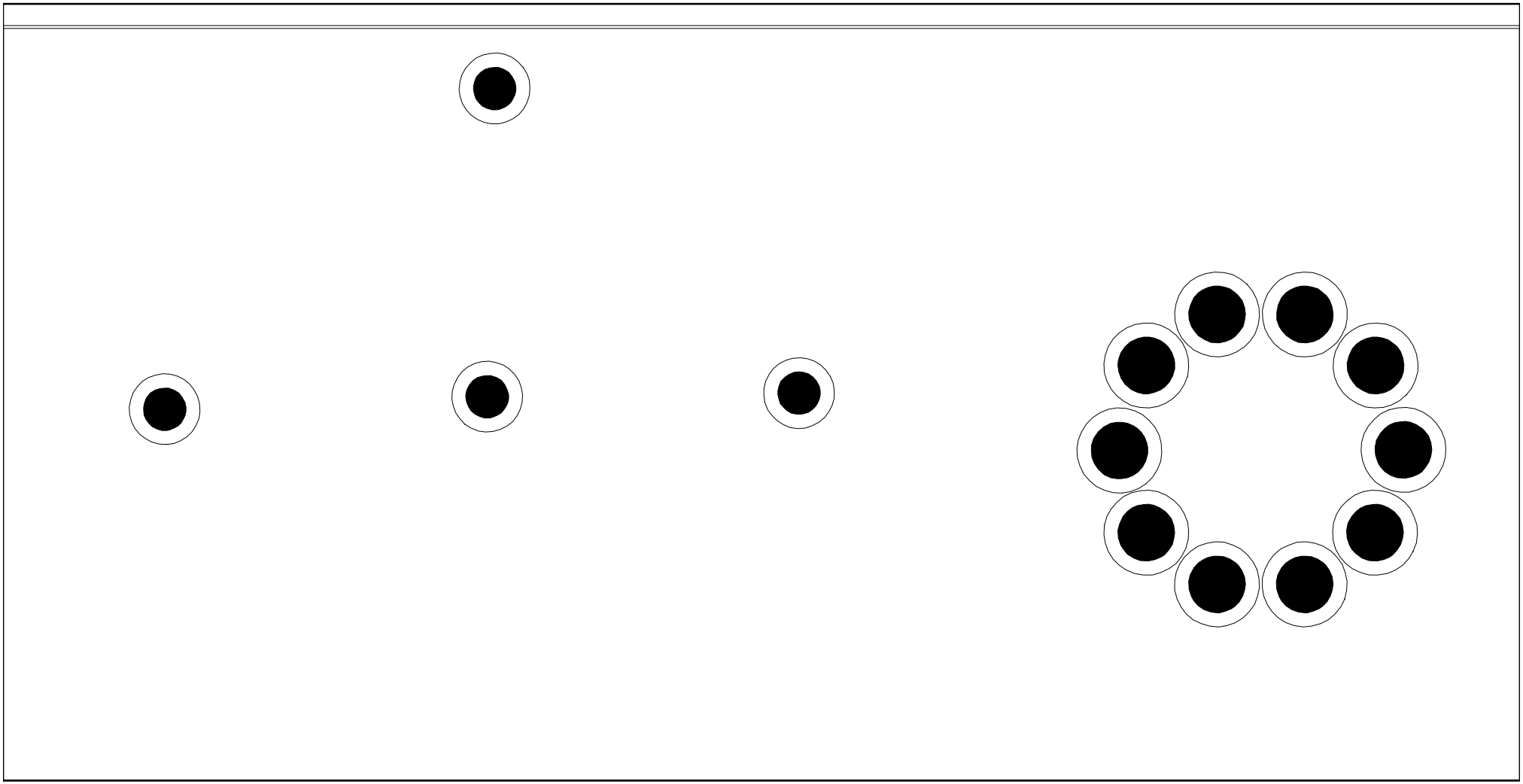

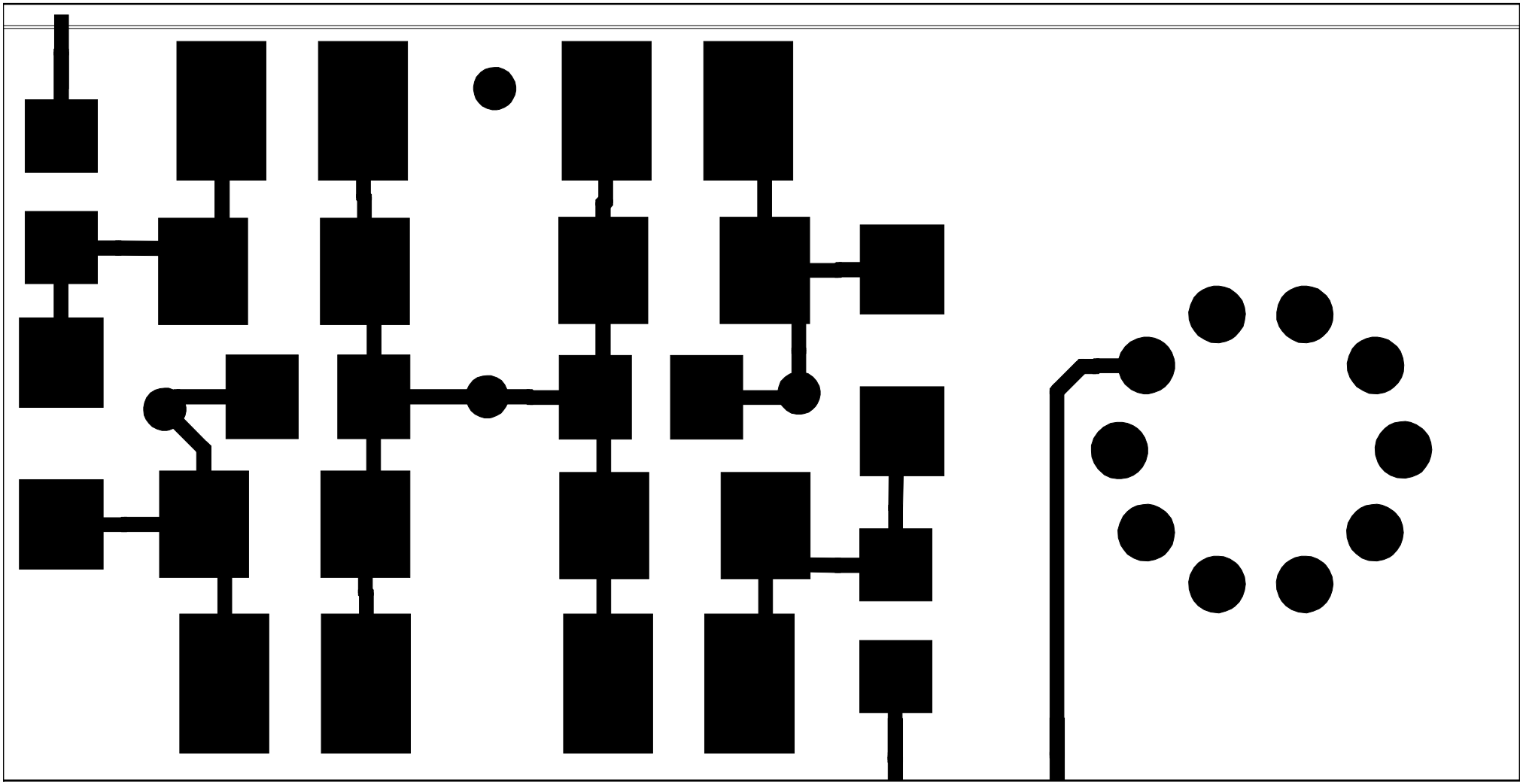

104
C24
C25
C10
C9
C8
C11
C23
C22
R4
R5
L1
103
102