REVISIONS			
REV	DESCRIPTION	DATE	APPROVED

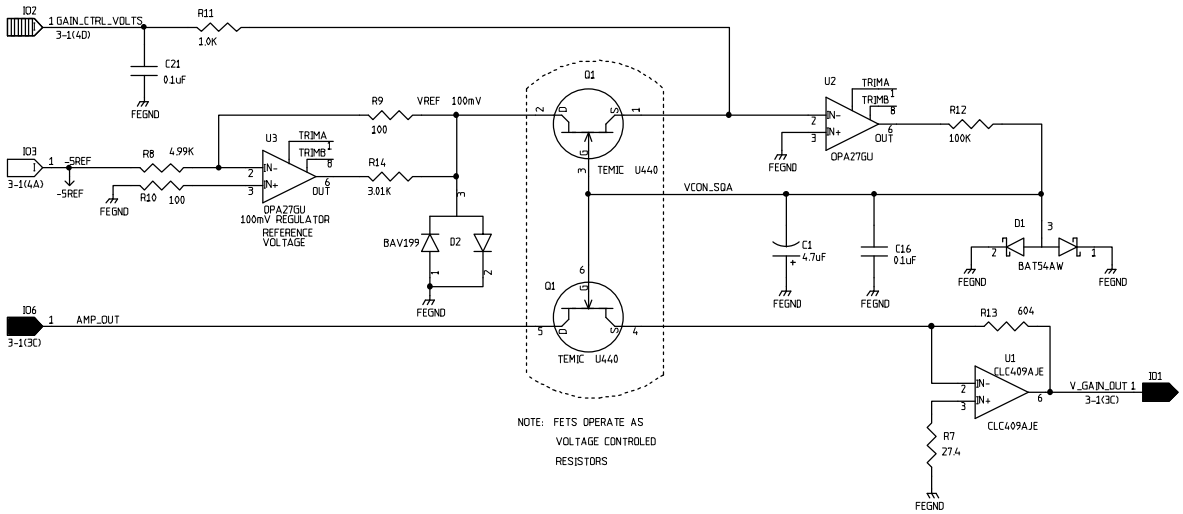

NOTE: FETS OPERATE AS VOLTAGE CONTROLED RESISTORS

VARIABLE GAIN AMPLIFIER

$GAIN = R13 \times \frac{GVC}{100}$

GCV = GAIN_CONTROL_VOLTAGE IN VOLTS

R13 IN OHMS

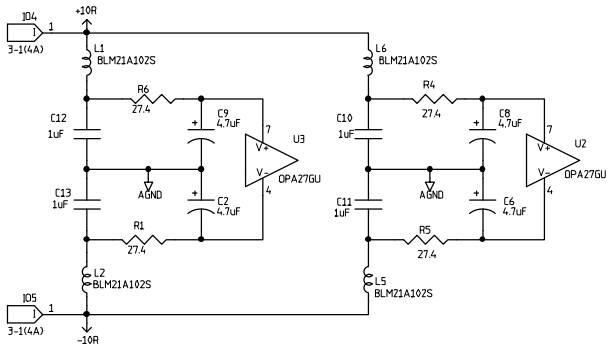

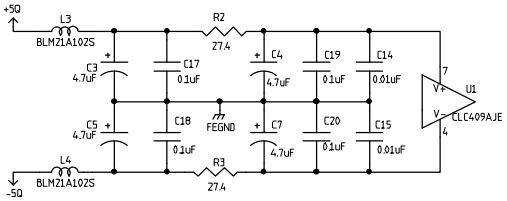

symbols added for certified circuits plane correction

V15NFE V15PFE

	NAME	DATE
ORIGINATOR	MERLE HALDEMAN	11/13/98
DRAWN	BRUCE MERKEL	11/13/98
CHECKED	TOM CRENNA	1/6/99
APPROVED		

FERMILAB PPD/ETT/ES CDMS (E-891)
ZIP MODULE
SQUID VARIABLE GAIN AMP

SIZE	FSCM NO.	DWG. NO.	REV
C			
SCALE		SHEET 3-3	

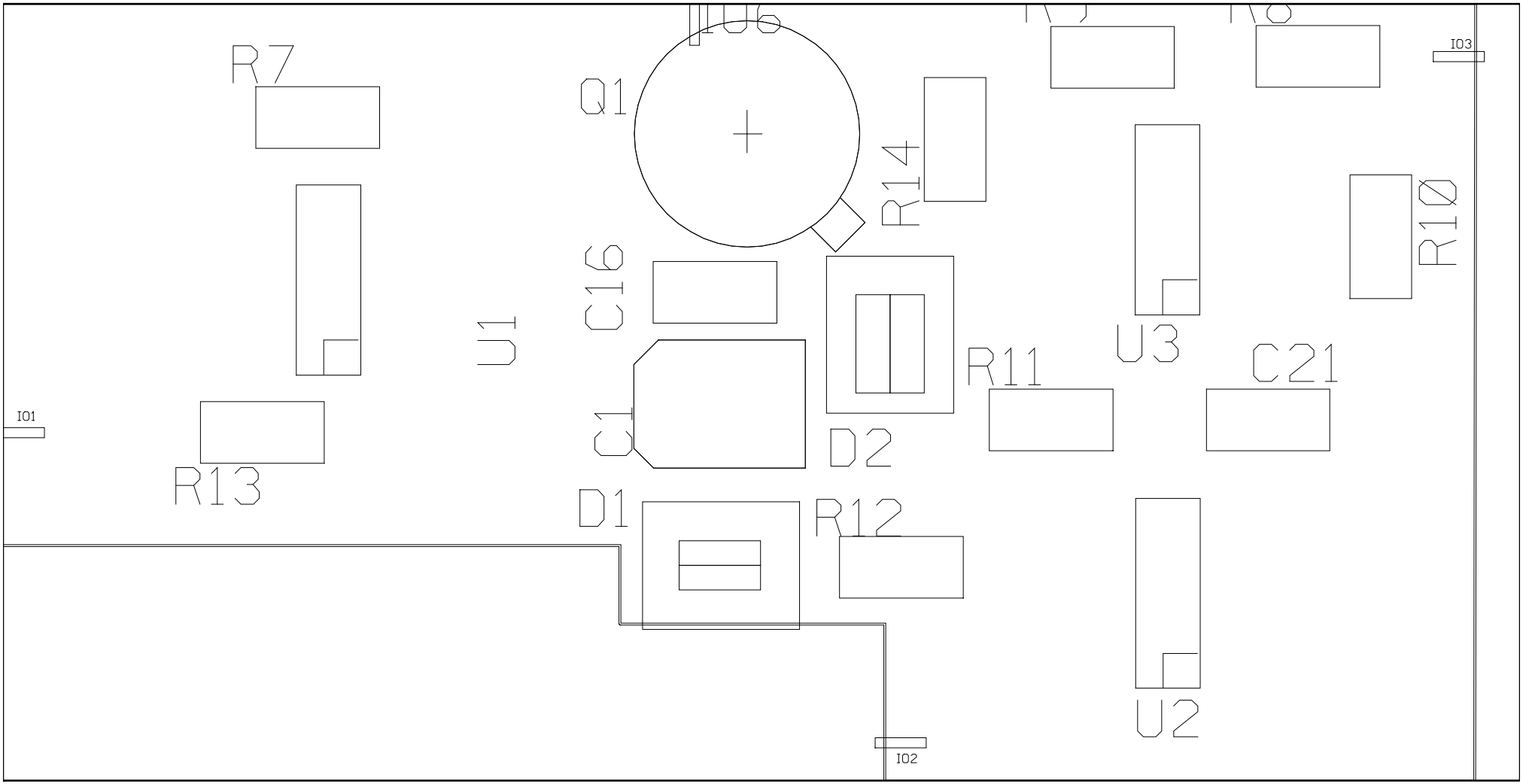
R7
Q1
R14
R10
C16
U1
U3
R11
C21
IO1
C1
D2
R13
D1
R12
U2
IO2
IO3

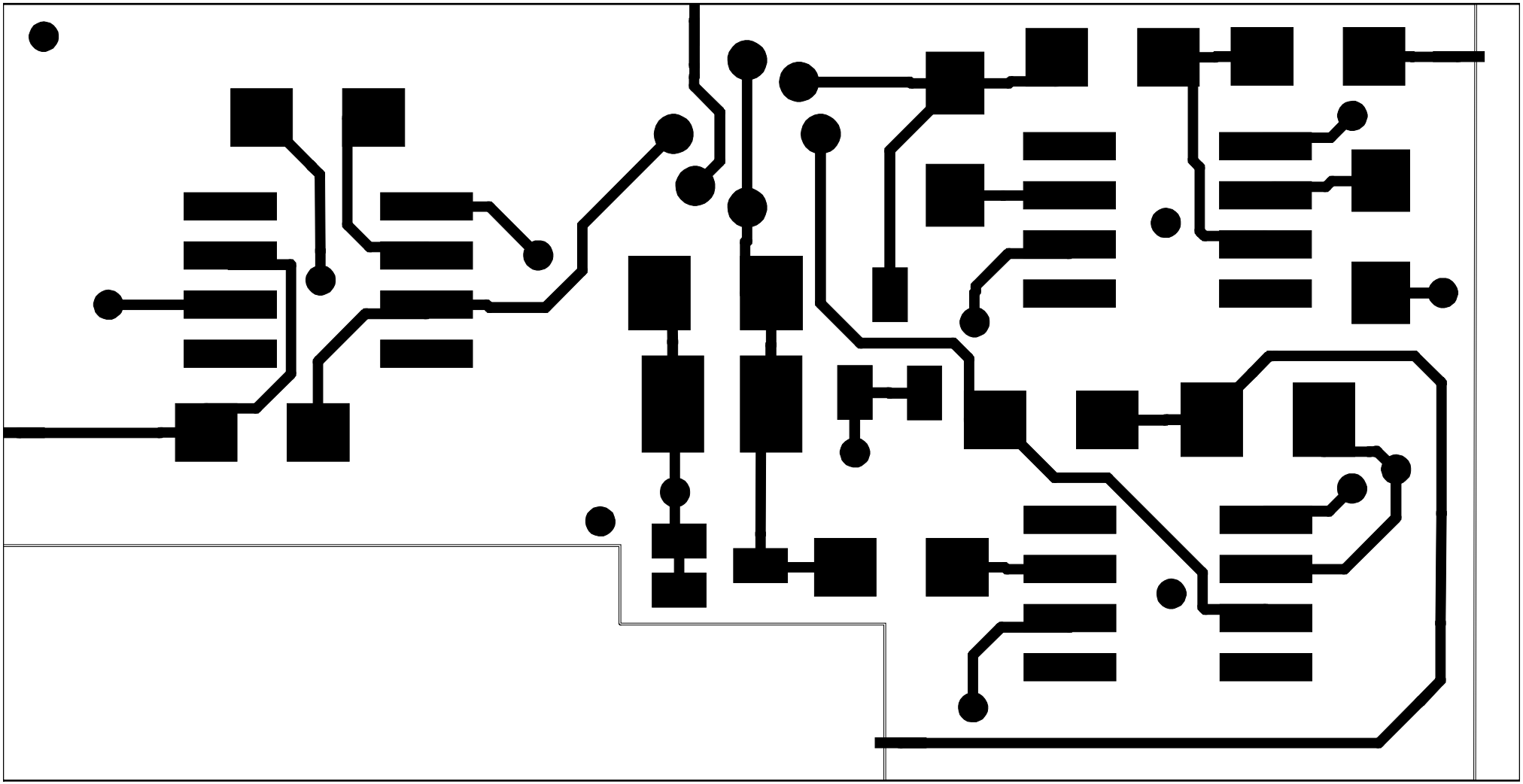

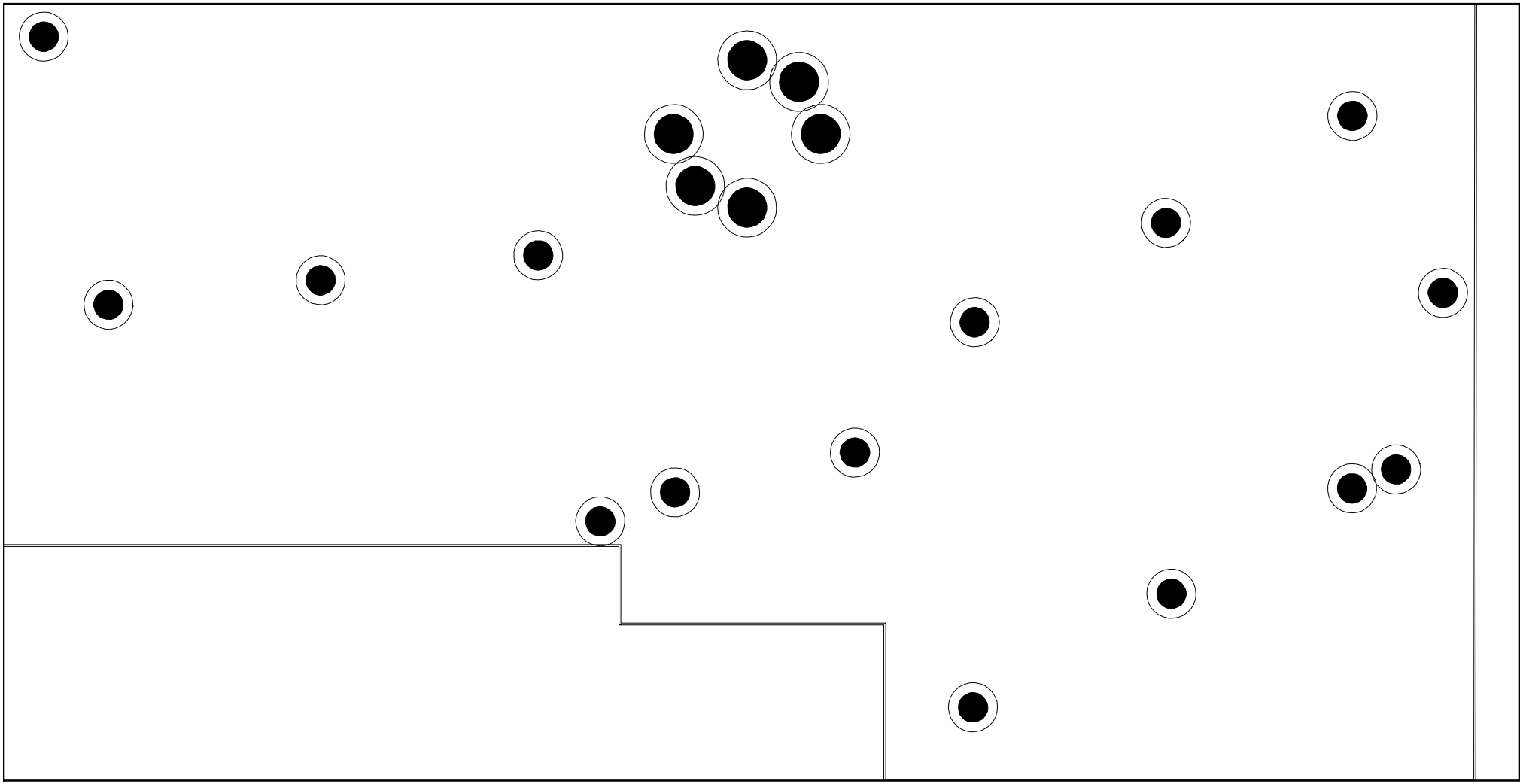

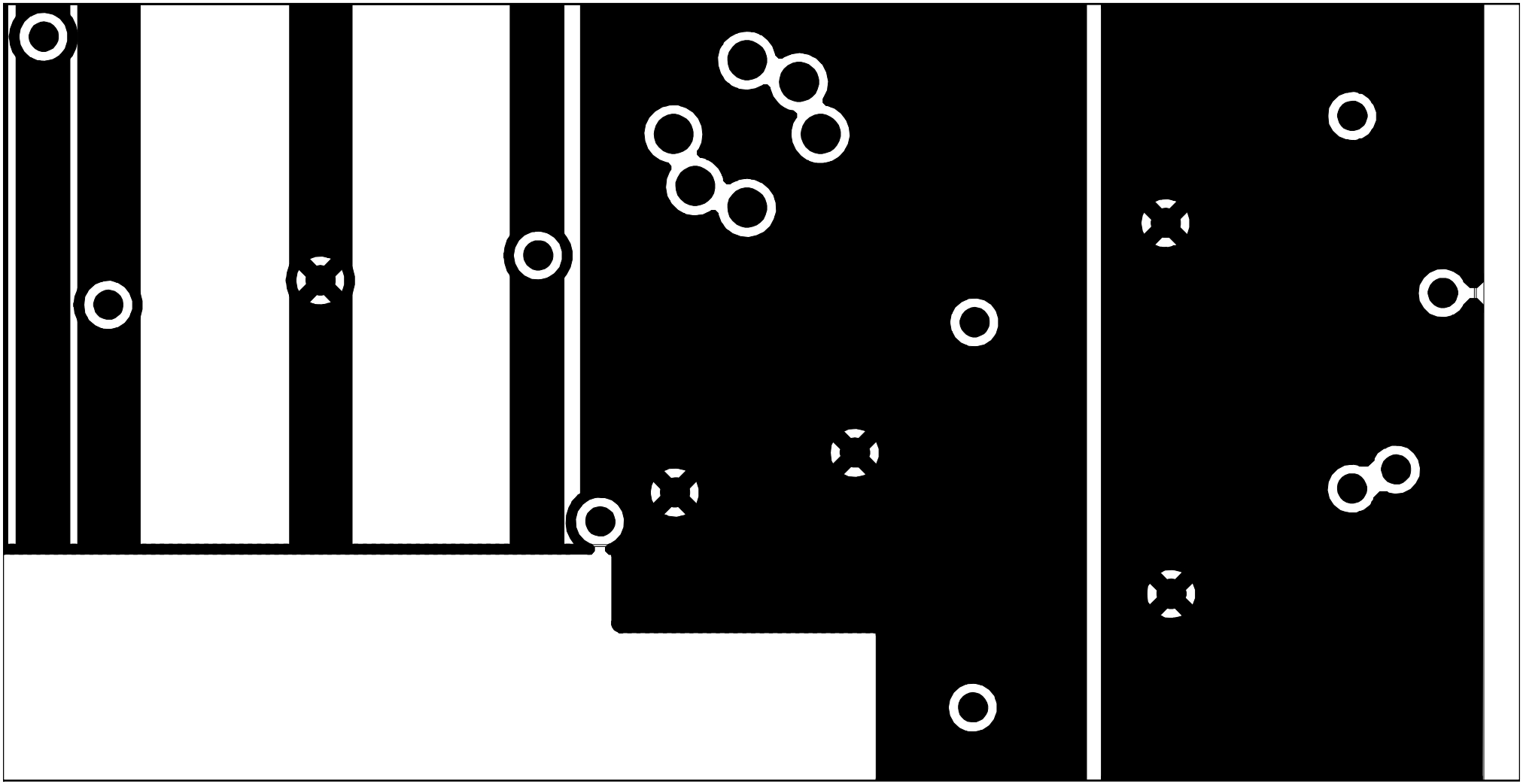

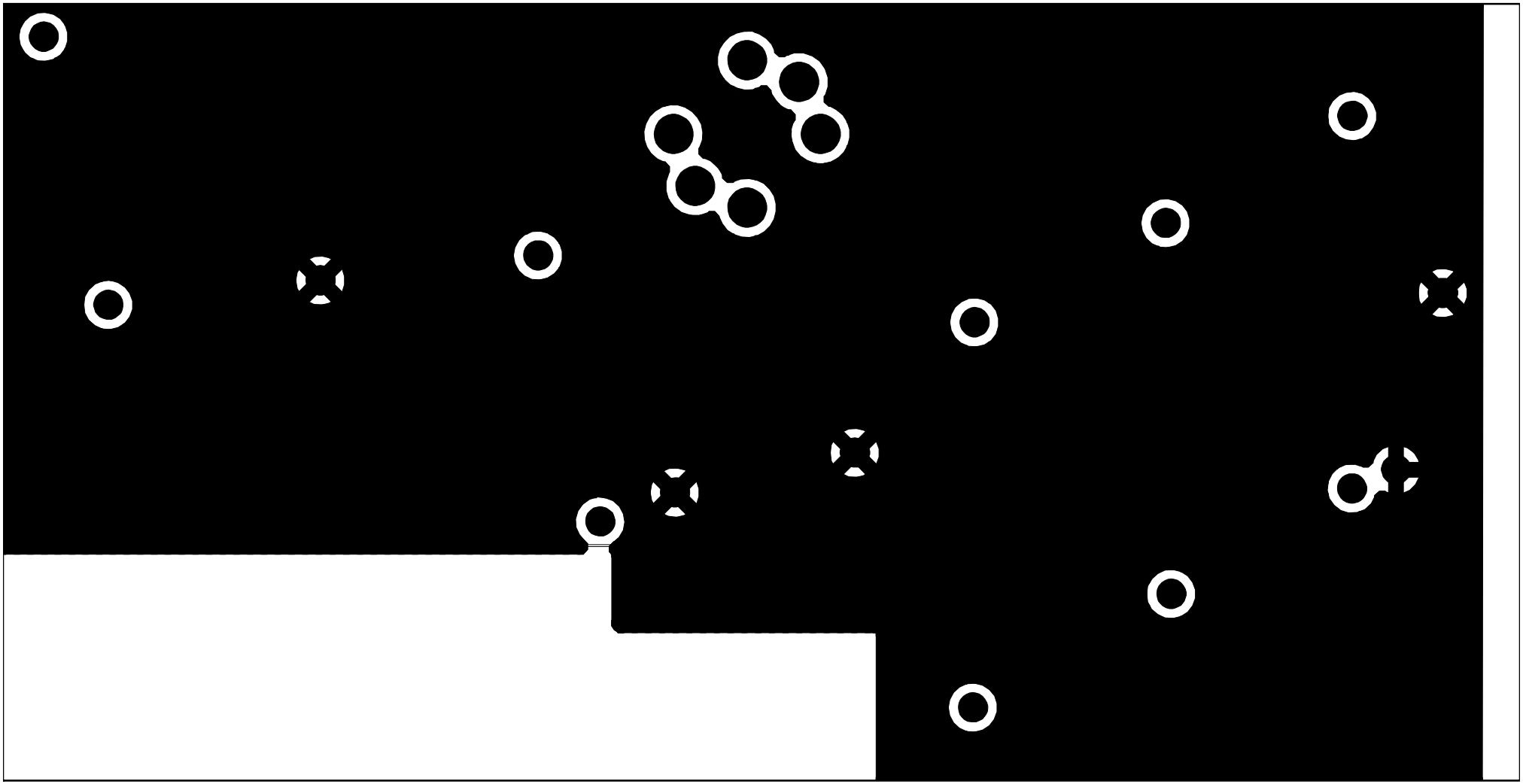

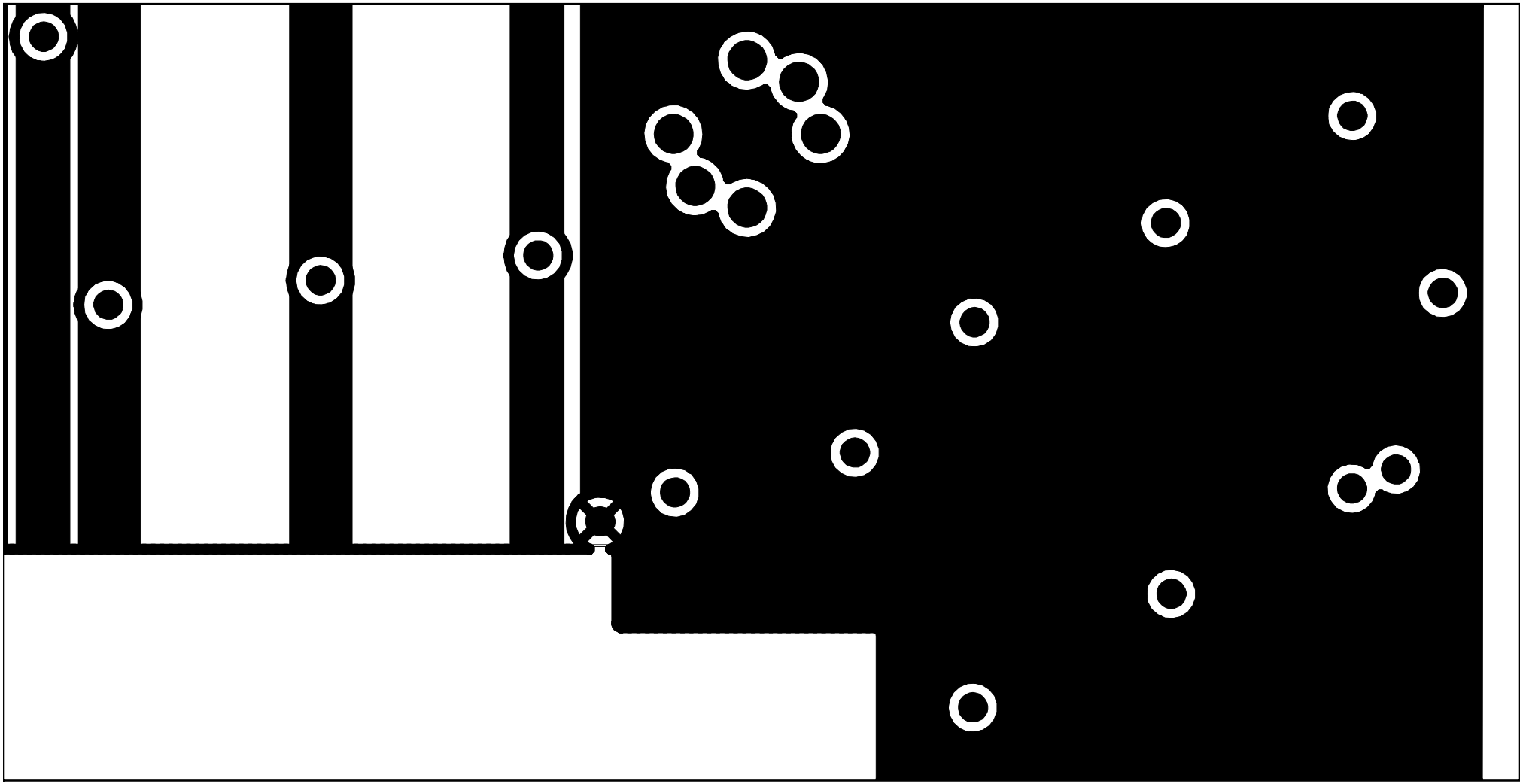

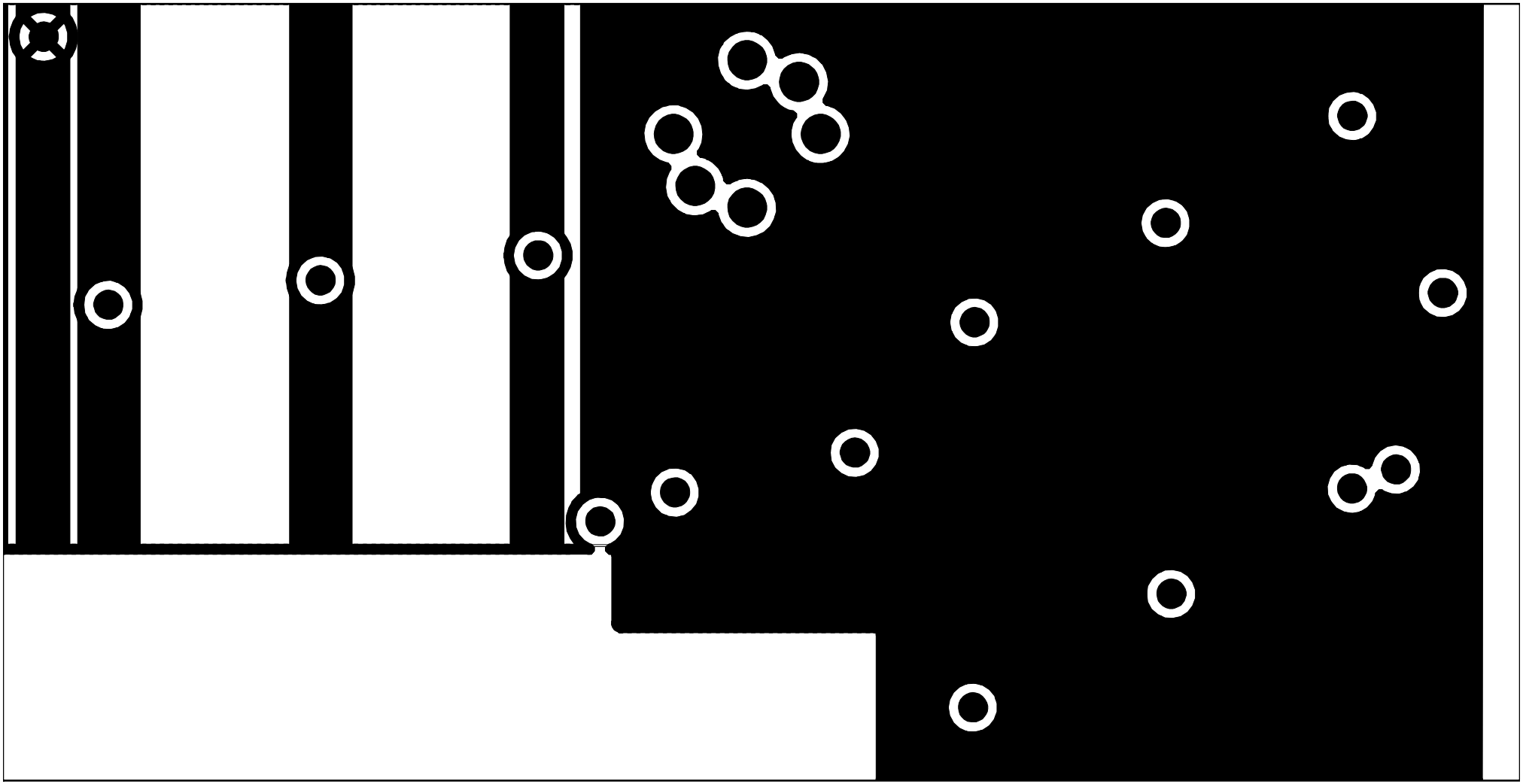

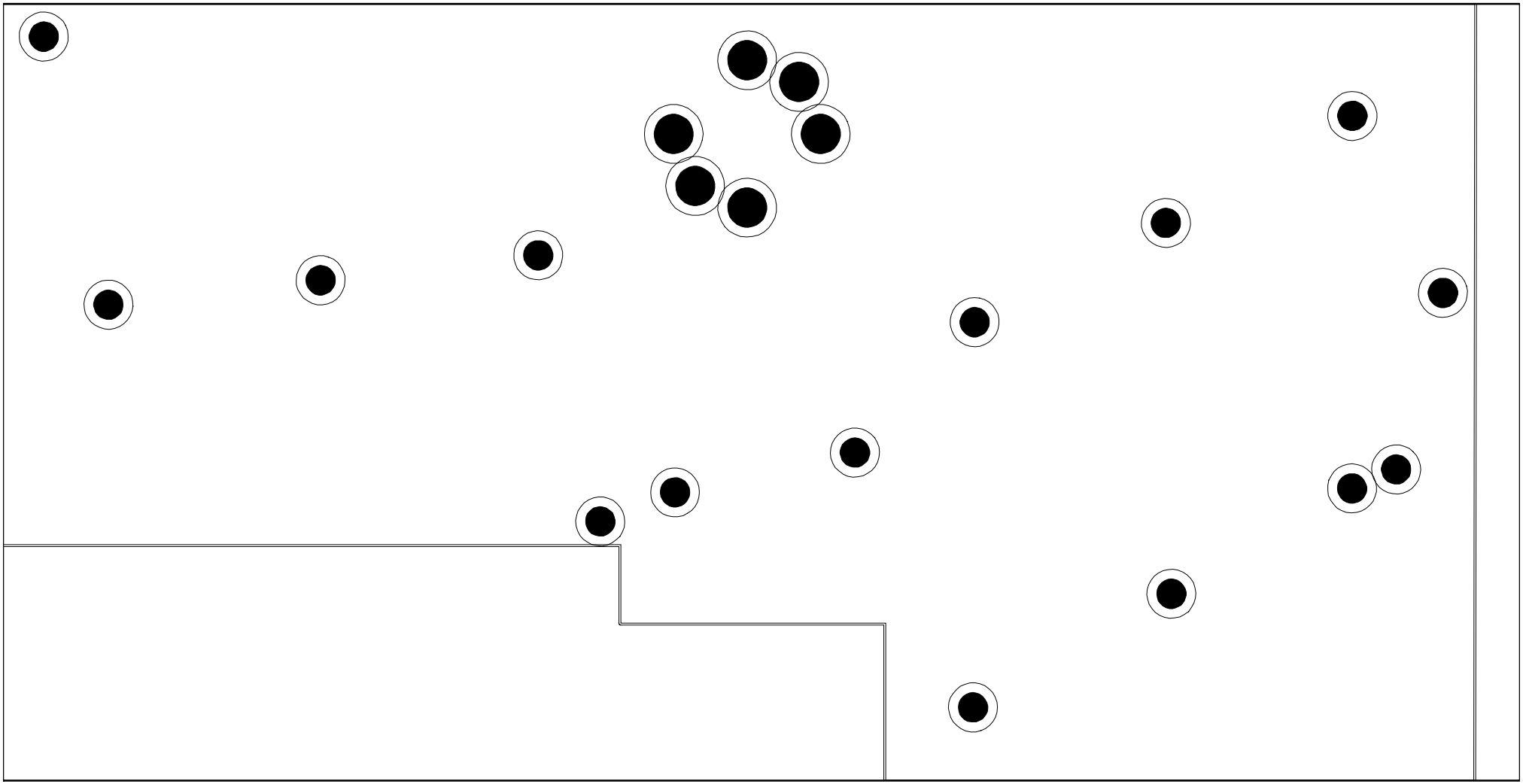

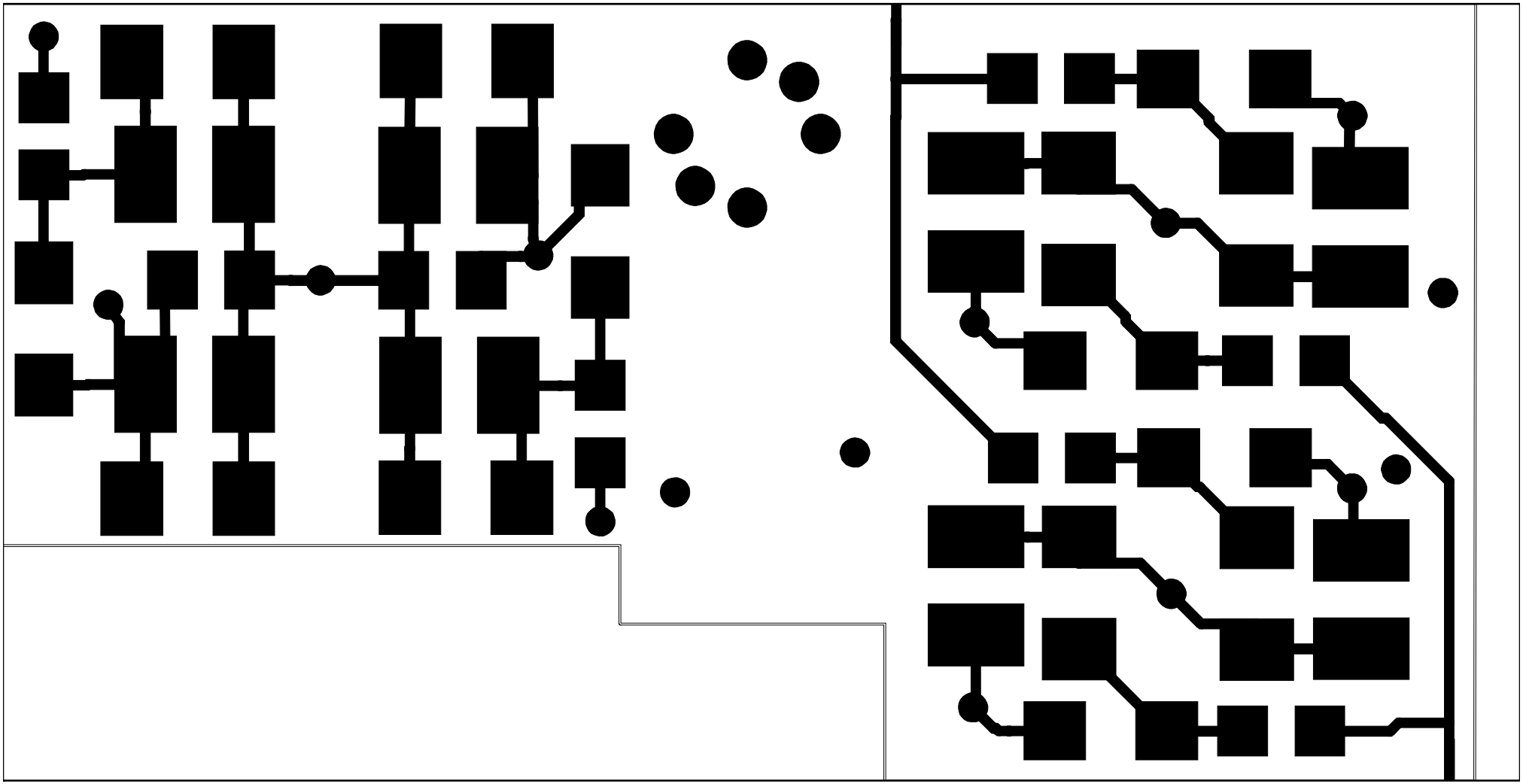

L3
C17
C20
C13
C7
C14
S13
R3
R5
C4
C2
C19
C18
L4
L2
R1
C9
C12
C3
C6
R6
L1
L5
R2
C8
C10
C11
C5
R4
L6
106
104