REVISIONS			
REV	DESCRIPTION	DATE	APPROVED
1	MODIFIED TO REMOVE OSCILLATIONS	5/19/99	BDM

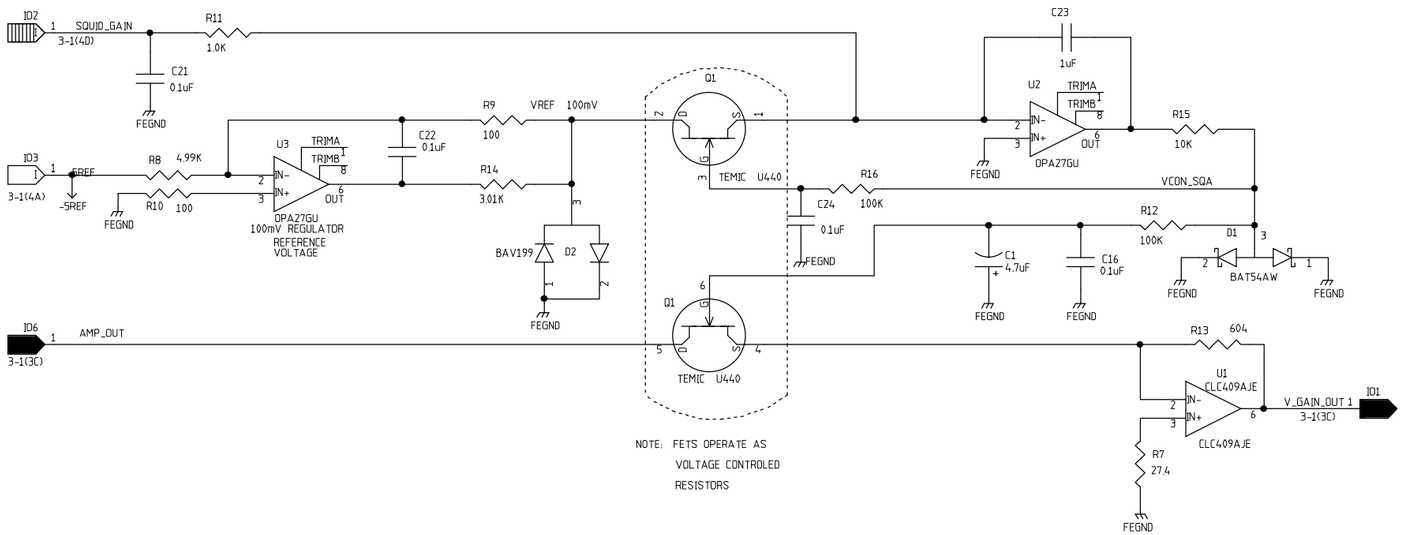

NOTE: FETS OPERATE AS
VOLTAGE CONTROLED
RESISTORS

VARIABLE GAIN AMPLIFIER

GAIN = R13 x $\frac{GVC}{100}$

GCV = GAIN_CONTROL_VOLTAGE IN VOLTS

R13 IN OHMS

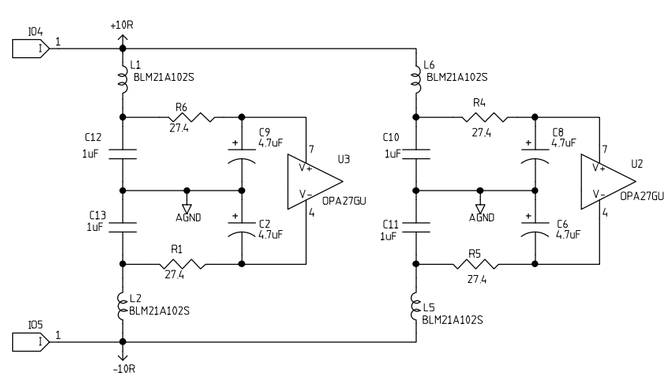

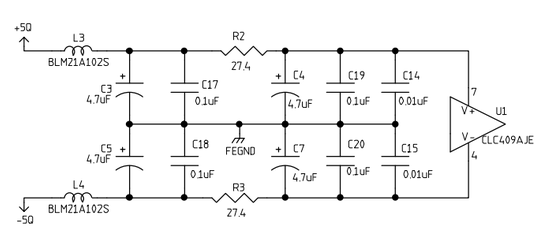

	NAME	DATE
ORIGINATOR	MERLE HALDEMAN	11/13/98
DRAWN	BRUCE MERKEL	11/13/98
CHECKED	TOM CRENNA	1/6/99
APPROVED		

FERMILAB PPD/ETT/ES CDMS (E-891)
ZIP MODULE
SQUID VARIABLE GAIN AMP

SIZE	FSCM NO.	DWG. NO.	REV
C			
SCALE		SHEET 3-3	

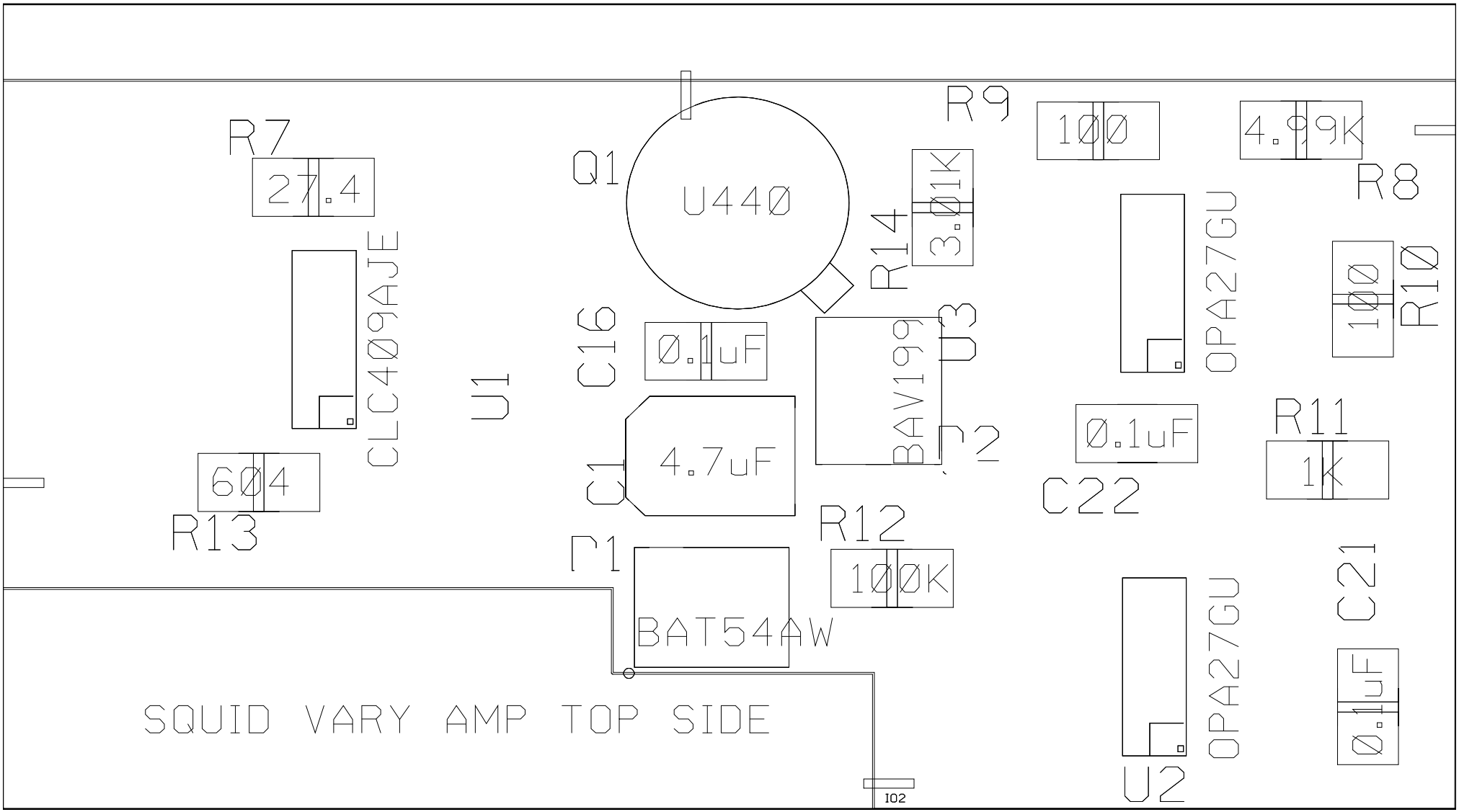
R7
27.4
CLC409AJE
U1
604
R13
Q1
U440
C16
0.1uF
C1
4.7uF
Γ1
BAT54AW
R14
3.01K
BAV199
D3
Γ2
R12
100K
R9
100
OPA27GU
0.1uF
C22
OPA27GU
U2
4.99K
R8
100
R10
R11
1K
C21
0.1uF
SQUID VARY AMP TOP SIDE
102

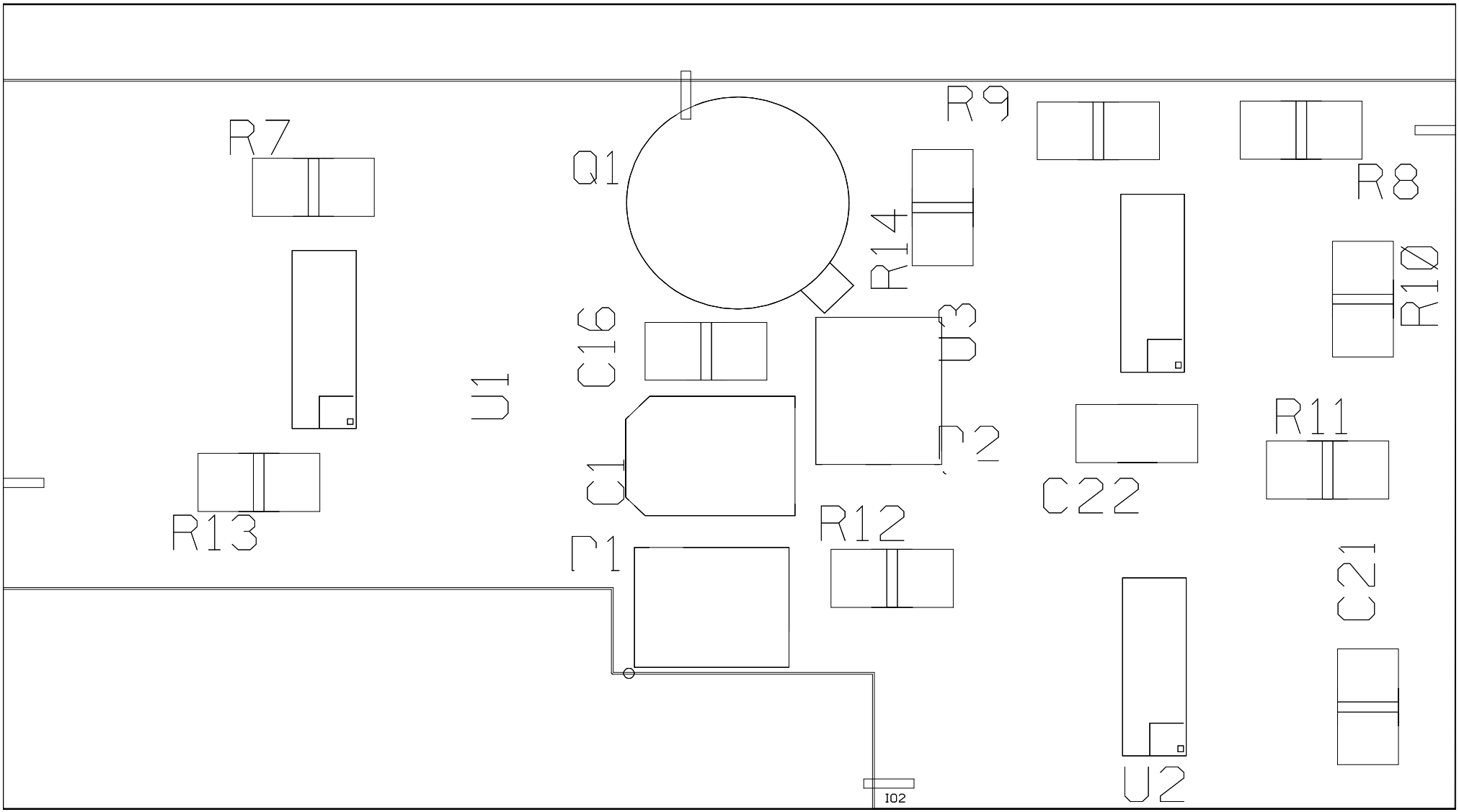
R7
Q1
R9
R8
R14
R10
C16
U3
U1
R11
C1
C22
R13
R12
C21
U2
IO2

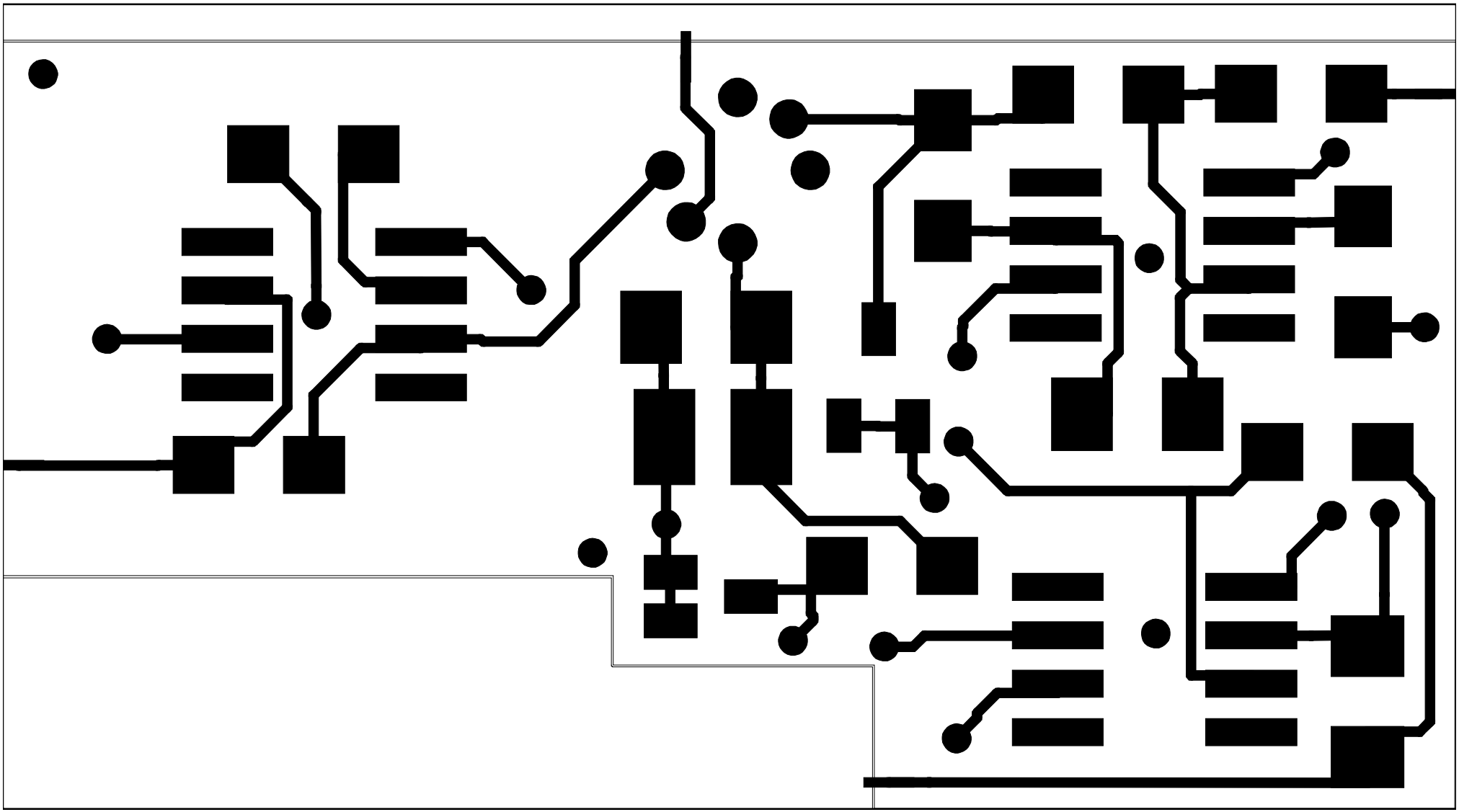

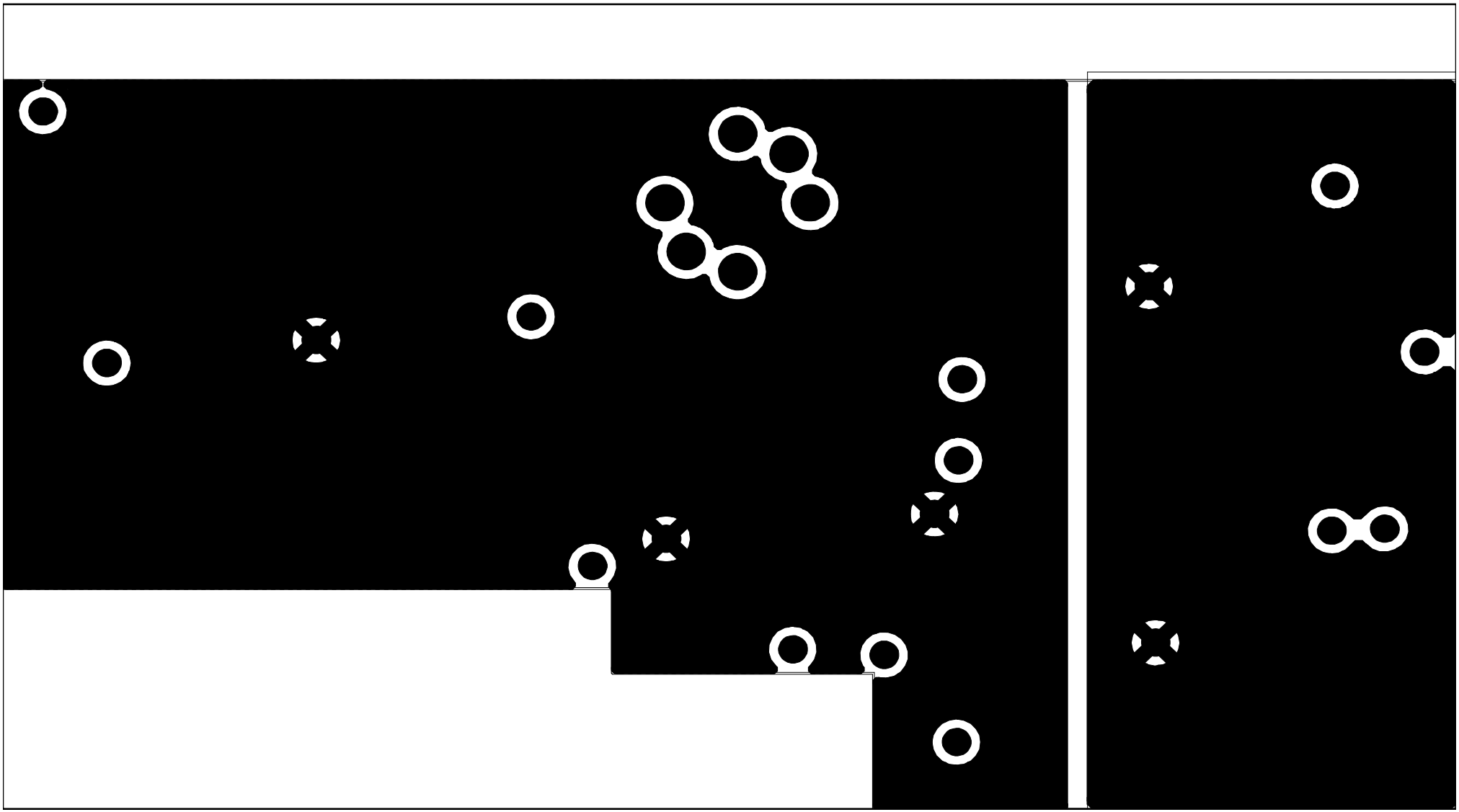

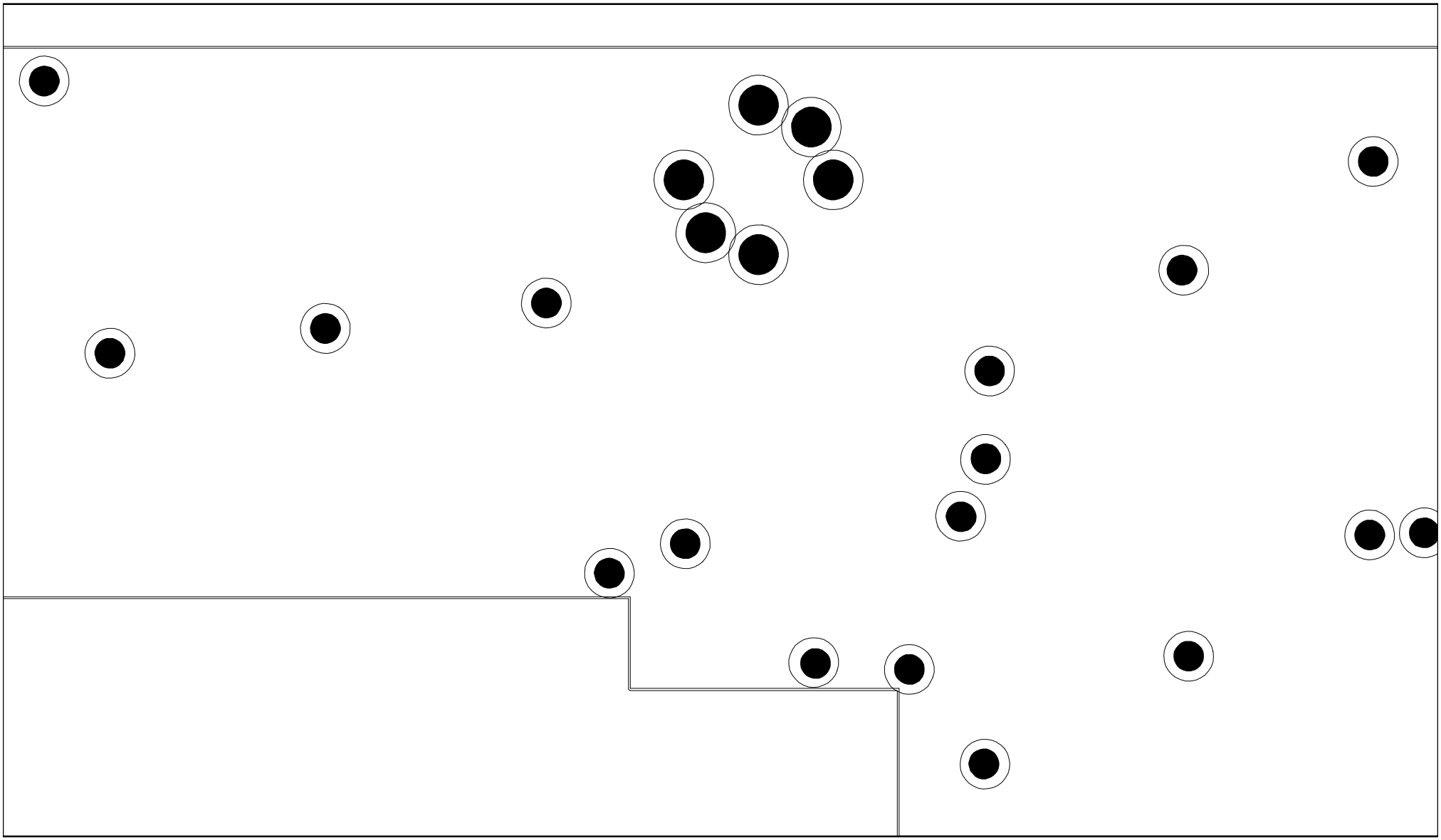

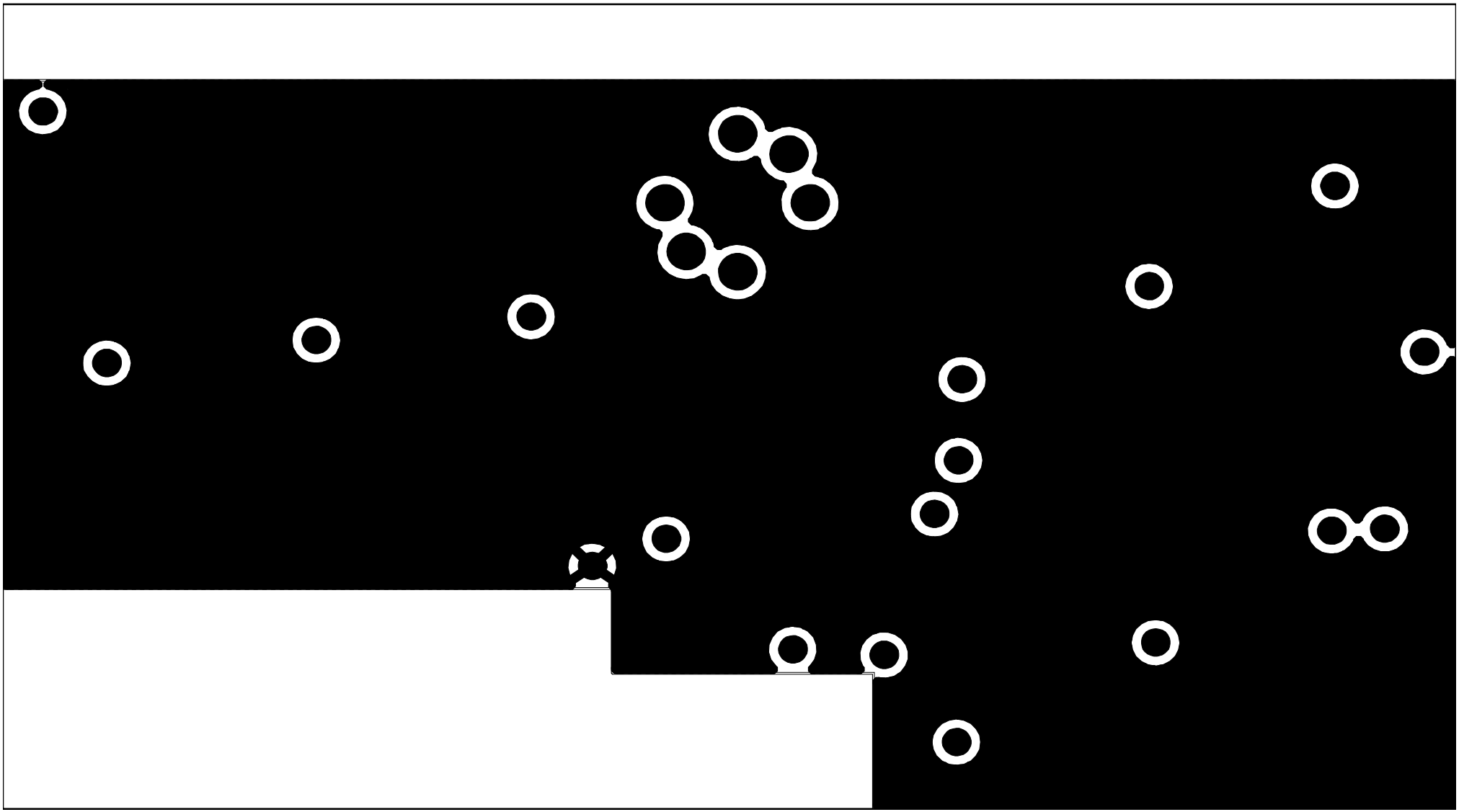

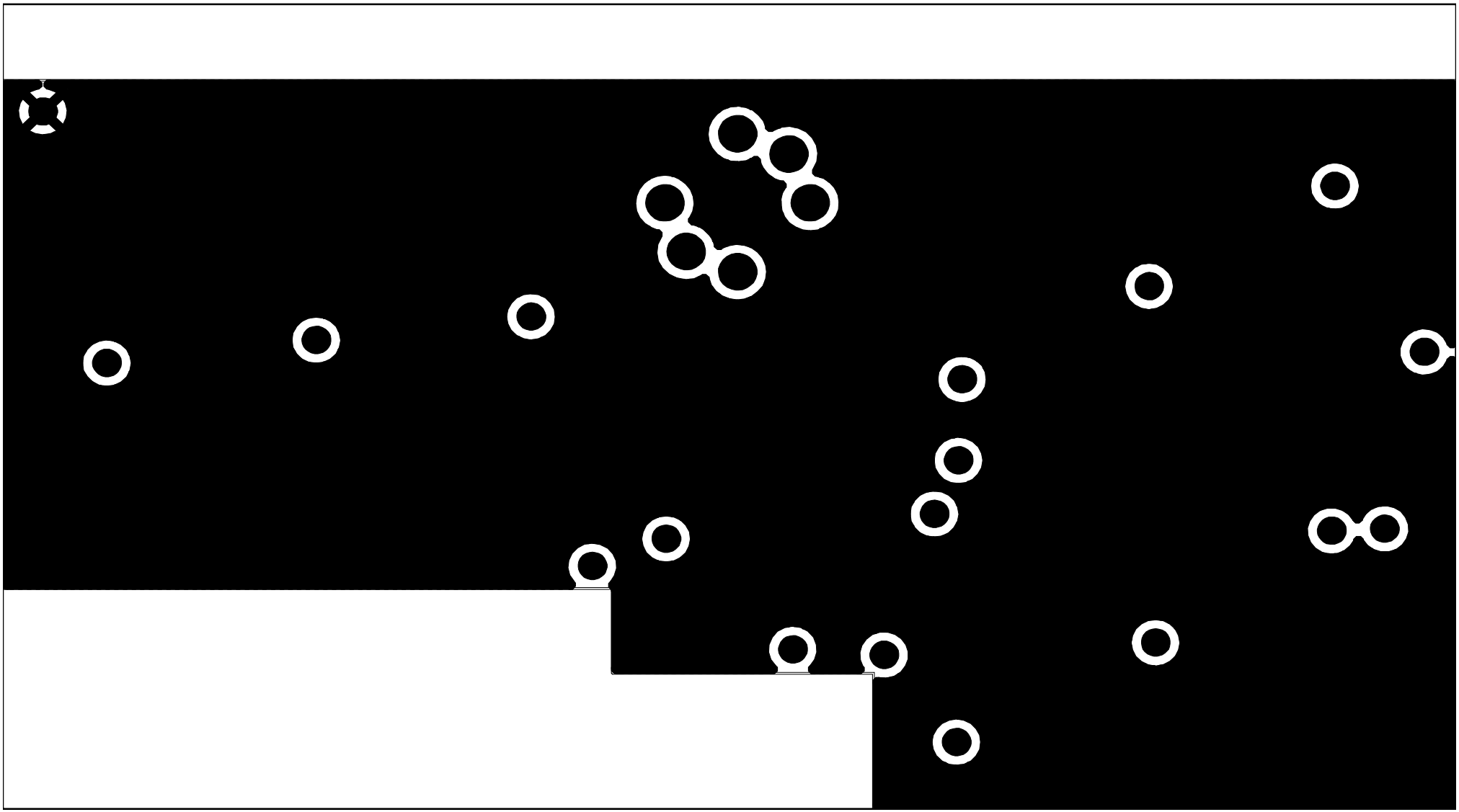

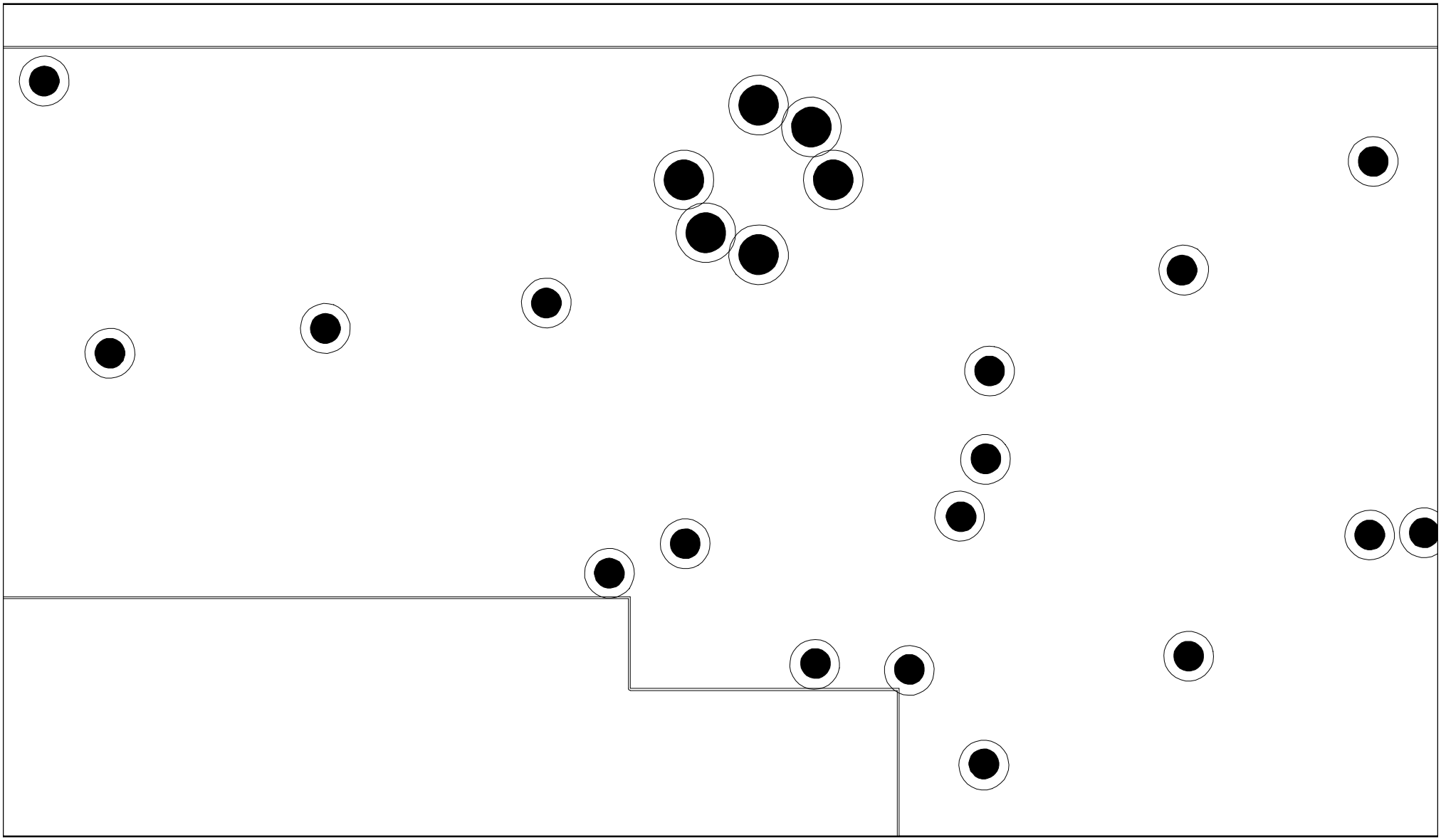

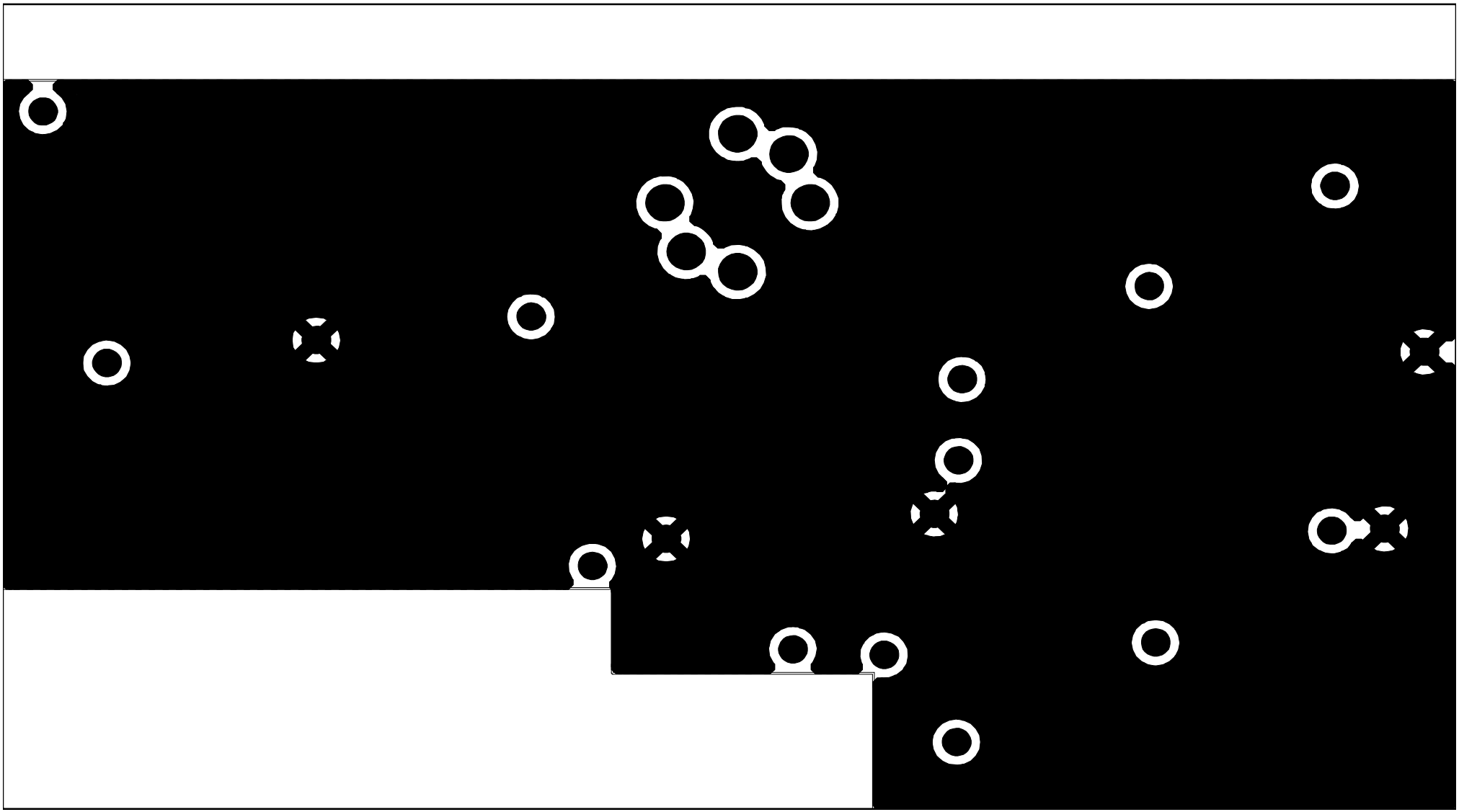

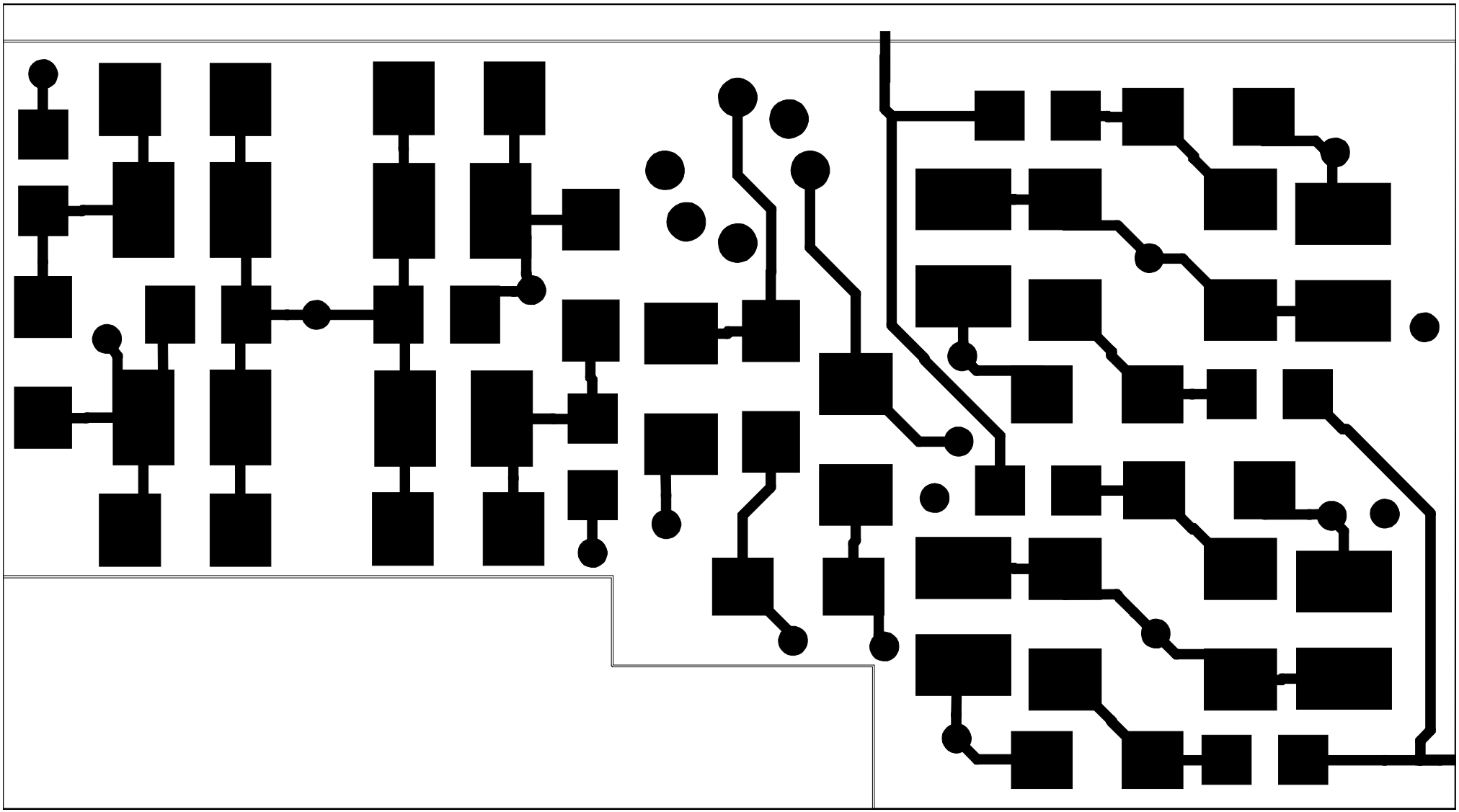

C13
C12
C11
C10
C9
C8
C7
C6
C5
C4
C3
C2
C1
C14
R1
R2
R3
R4
R5
R6
R7
R8
R9
R10
R11
R12
R13
R14
R15
L1
L2
L3
L4
L5
L6
L7
IC1
IC2
IC3
IC4

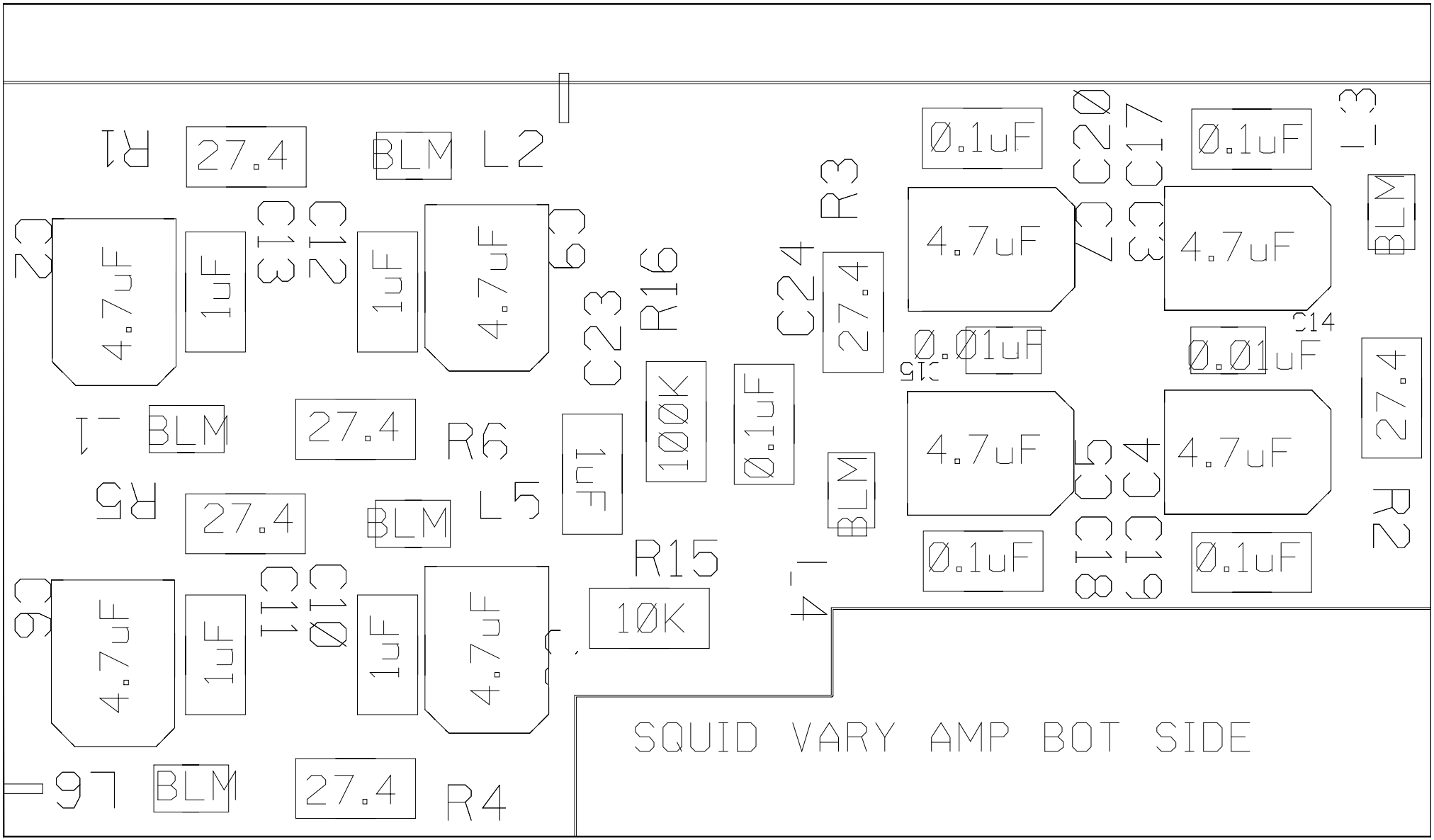
R1
27.4
BLM
L2
C2
4.7uF
1uF
C13
C12
1uF
4.7uF
C9
C23
R16
100K
0.1uF
C24
R3
27.4
0.1uF
C20
C17
0.1uF
L3
4.7uF
4.7uF
BLM
0.01uF
0.01uF
C14
27.4
L1
BLM
27.4
R6
1uF
BLM
4.7uF
C5
C4
4.7uF
R5
27.4
BLM
L5
R15
0.1uF
C18
C19
0.1uF
R2
C6
4.7uF
1uF
C11
C10
1uF
4.7uF
10K
L4
SQUID VARY AMP BOT SIDE
L9
BLM
27.4
R4