REV.	DESCRIPTION	DRAWN / APPD.	DATE / DATE
A	ADDED CONNECTORS	N.C.	10/12/98

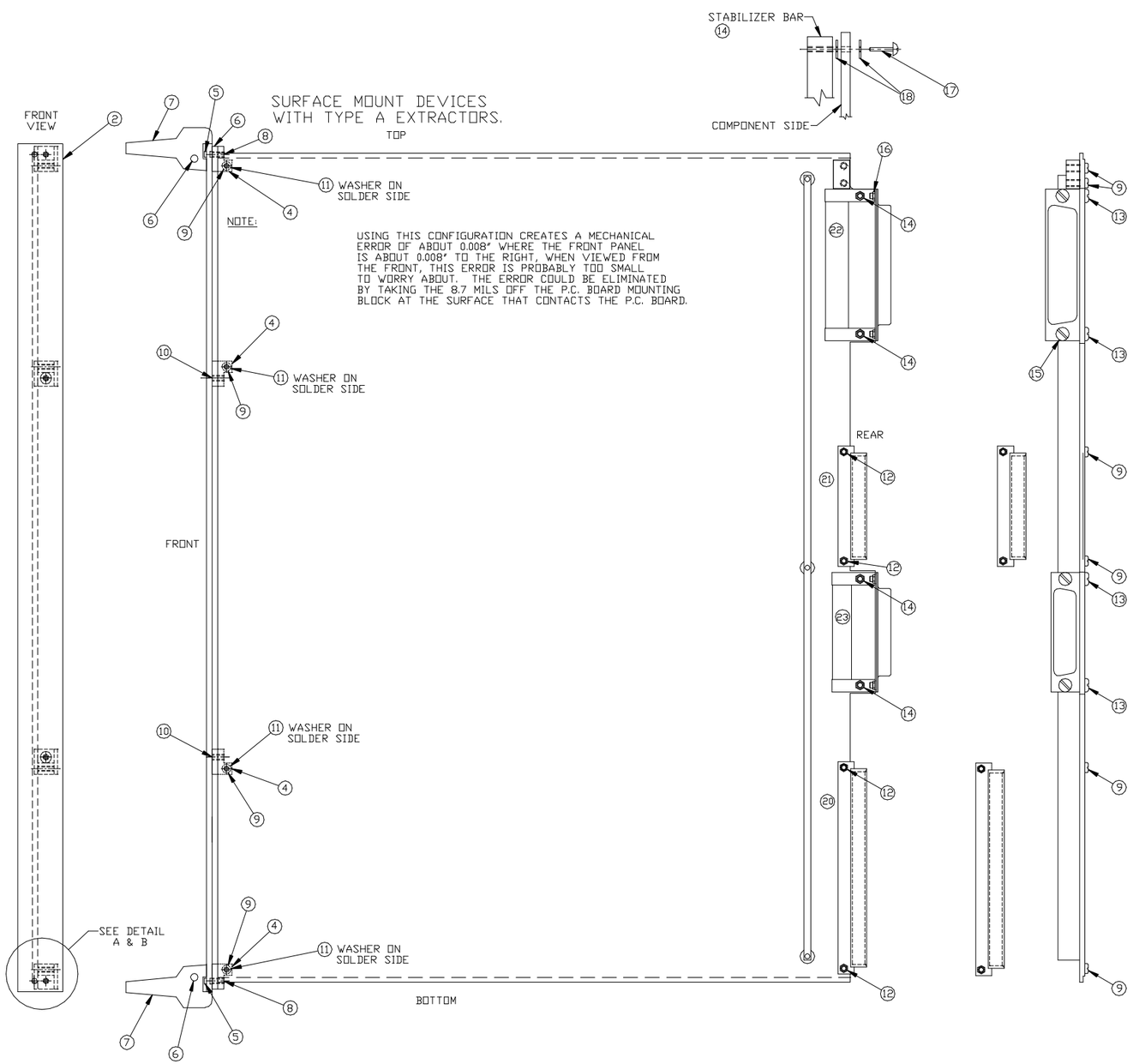

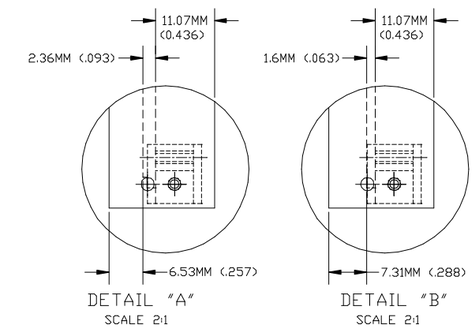

NOTES:
1. ALL TOLERANCES ARE +/- 0.1MM UNLESS OTHERWISE SPECIFIED.
2. ALL DIMENSIONS ARE INCHES & (MM)
3. 1 HP = 5.08MM (0.2)
4. 9U FRONT PANEL SET (ITEM 1) INCLUDES EVERYTHING CONTAINED IN ITEMS 2 THROUGH 10.
5. BOARD EXTRACTOR SET (ITEM 3), INCLUDES 1 EACH OF THE FOLLOWING ITEMS: 5, 6, 7, 8.

	ITEM	DESCRIPTION	MFGR.	PART NO.	QTY.
	23	25 pin male D connector	AMP	745353-4	1
	22	50 pin male D connector	AMP	745355-4	1
	21	48 pin male connector, Eurocard type "1/2 c"	AMP	650948-5	1
	20	96 pin male connector, Eurocard type "c"	AMP	650947-5	1
	19	Stabilizer bar	CUSTOM	CUSTOM	1
	18	Nylon washer (2-56 screw)	CONCORD	760-2501	6
	17	Binding head screw, #2-56 X 5/16"	McMaster-Carr	#91793A078	3
	16	Machine screw nut, Hex, #4-40	McMaster-Carr	#91841A005	4
	15	Flat head slotted screw, #4-40 X 1/8"	McMaster-Carr	#91781A103	4
	14	Machine screw nut, Hex w/washer, #4-40	McMaster-Carr	#96278A005	4
	13	Binding head screw, #4-40 X 5/16"	McMaster-Carr	#91793A107	4
	12	Hex nut, M2.5	SCHROFF	21100-144	4
	11	Washer 2.7	SCHROFF	21100-721	4
	10	Raised c/sk screw (M2.5X8)	SCHROFF	21100-429	2
	9	Cheese hd. screw (M2.5X10)	SCHROFF	21100-138	8
	8	Cheese hd. screw (M2.5X10)	SCHROFF	INCLUDED IN ITEM 3	2
	7	Board extractor handle	SCHROFF	INCLUDED IN ITEM 3	2
	6	Hinge pin	SCHROFF	INCLUDED IN ITEM 3	2
	5	Hinge	SCHROFF	INCLUDED IN ITEM 3	2
	4	Board holder	SCHROFF	60807-181	4
NOTE 5	3	Bd extractor set (black)	SCHROFF	20808-137	2
	2	Front panel (9U 4 HP)	SCHROFF	30897-430	1
NOTE 4	1	9U front panel set	SCHROFF	?	1

ORIGINATOR	M. HALDEMAN	4/6/98	CHECKED	M. HALDEMAN	4/10/98
DRAWN	N. CUNY	4/6/98	APPROVED		

FERMI NATIONAL ACCELERATOR LABORATORY
UNITED STATES DEPARTMENT OF ENERGY

PPD/ETT/ET-CDMS (E891) 9U MODULE ASSEMBLY DWG.

SCALE	SOFTWARE	DRAWING NUMBER	REV.
FULL	AUTOCAD		