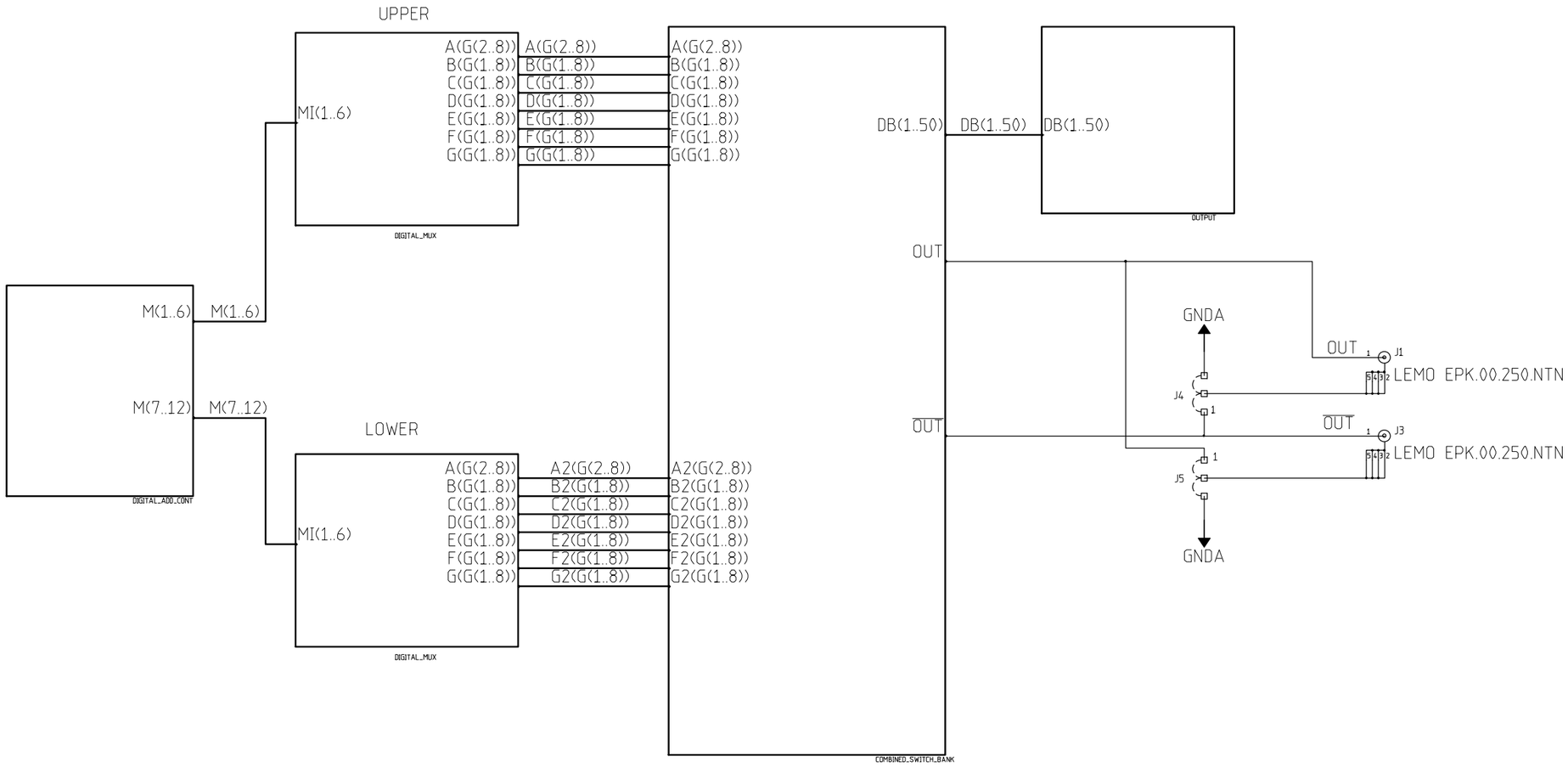

MODFIED 01:38:41 PM 07/10/2001				
UNLESS OTHERWISE SPECIFIED			ORIGINATOR	
FRACTIONS	DECIMALS	ANGLES	DRAWN	
			CHECKED	
			APPROVED	

1. BREAK ALL SHARP EDGES 1/64 MAX.
2. DO NOT SCALE DWG.
3. DIMENSIONING IN ACCORD WITH ANSI Y14.5 STD's.

√ MAX. ALL MACHINED SURFACES

USED ON

MATERIAL

Fermi National Accelerator Laboratory
United States Department of Energy

D:\JOBS2000\FEDUP\FEDUP.prj

FRONT END DIAGNOSTIC UNIT PROFILER BLOCK DIAGRAM

SIZE	SCALE	FILMED	DRAWING NUMBER	PAGE 01 of 01	REV
D	1:1				A

H=8ND; V=4LA

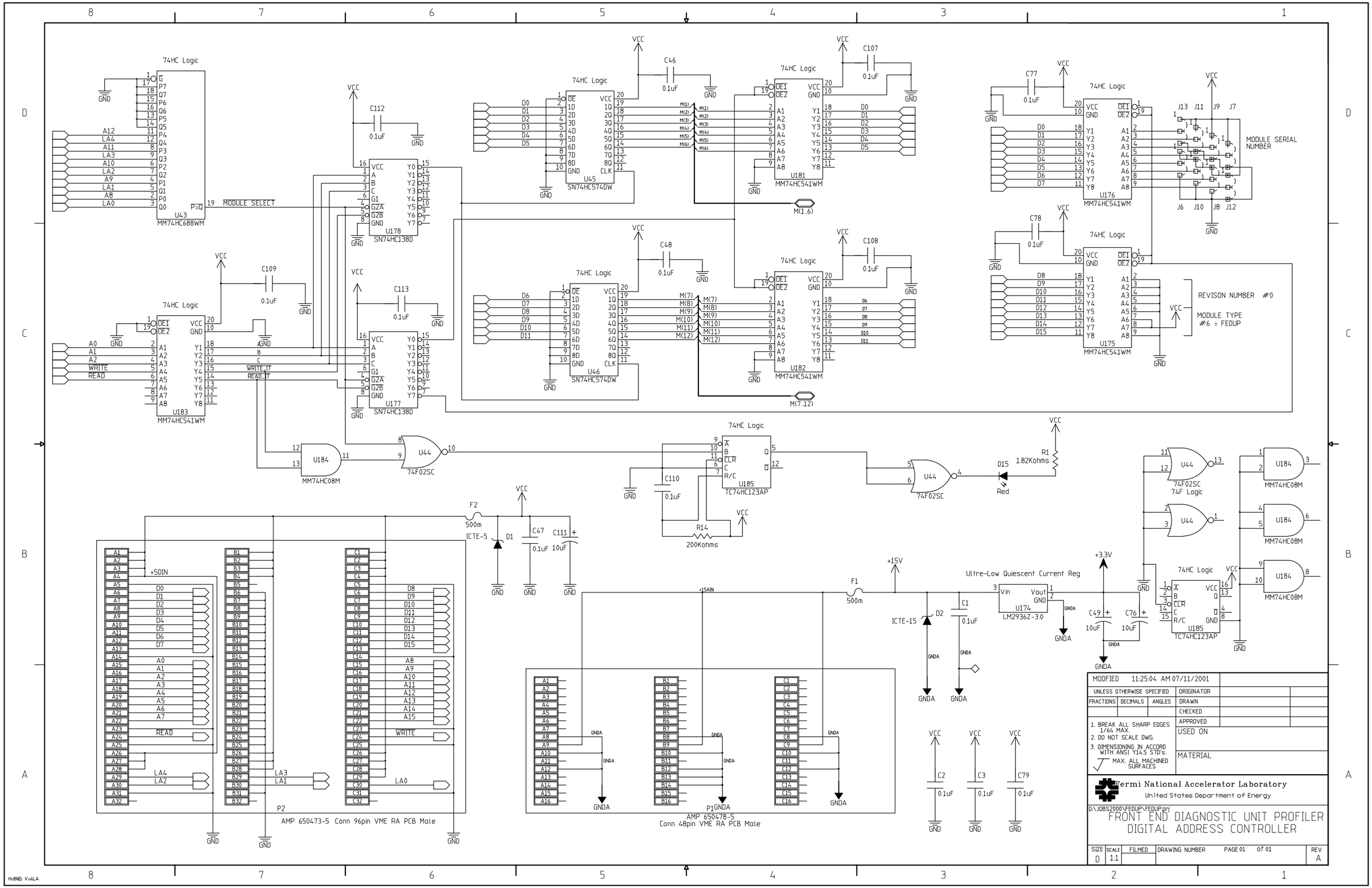
74HC Logic
U43
MM74HC688WM
MODULE SELECT
U178
SN74HC138D
U177
SN74HC138D
U183
MM74HC541WM
U184
MM74HC08M
U44
74F02SC
U45
SN74HC574DW
U46
SN74HC574DW
U181
MM74HC541WM
U182
MM74HC541WM
U176
MM74HC541WM
U175
MM74HC541WM
U185
TC74HC123AP
U174
LM2936Z-3.0
MODULE SERIAL NUMBER
REVISON NUMBER #0
MODULE TYPE
#6 = FEDUP
M(1..6)
M(7..12)
R1
1.82Kohms
D15
Red
R14
200Kohms
F2
500m
ICTE-5
D1
F1
500m
ICTE-15
D2
+15V
+3.3V
+5DIN
P2
AMP 650473-5 Conn 96pin VME RA PCB Male
P1
AMP 650478-5
Conn 48pin VME RA PCB Male
MODIFIED 11:25:04 AM 07/11/2001
UNLESS OTHERWISE SPECIFIED
FRACTIONS DECIMALS ANGLES
ORIGINATOR
DRAWN
CHECKED
APPROVED
USED ON
MATERIAL
1. BREAK ALL SHARP EDGES 1/64 MAX.
2. DO NOT SCALE DWG.
3. DIMENSIONING IN ACCORD WITH ANSI Y14.5 STD's.
MAX. ALL MACHINED SURFACES
Fermi National Accelerator Laboratory
United States Department of Energy
D:\JOBS2000\FEDUP\FEDUP.prj
FRONT END DIAGNOSTIC UNIT PROFILER
DIGITAL ADDRESS CONTROLLER
SIZE D
SCALE 1:1
FILMED
DRAWING NUMBER
PAGE 01 of 01
REV A

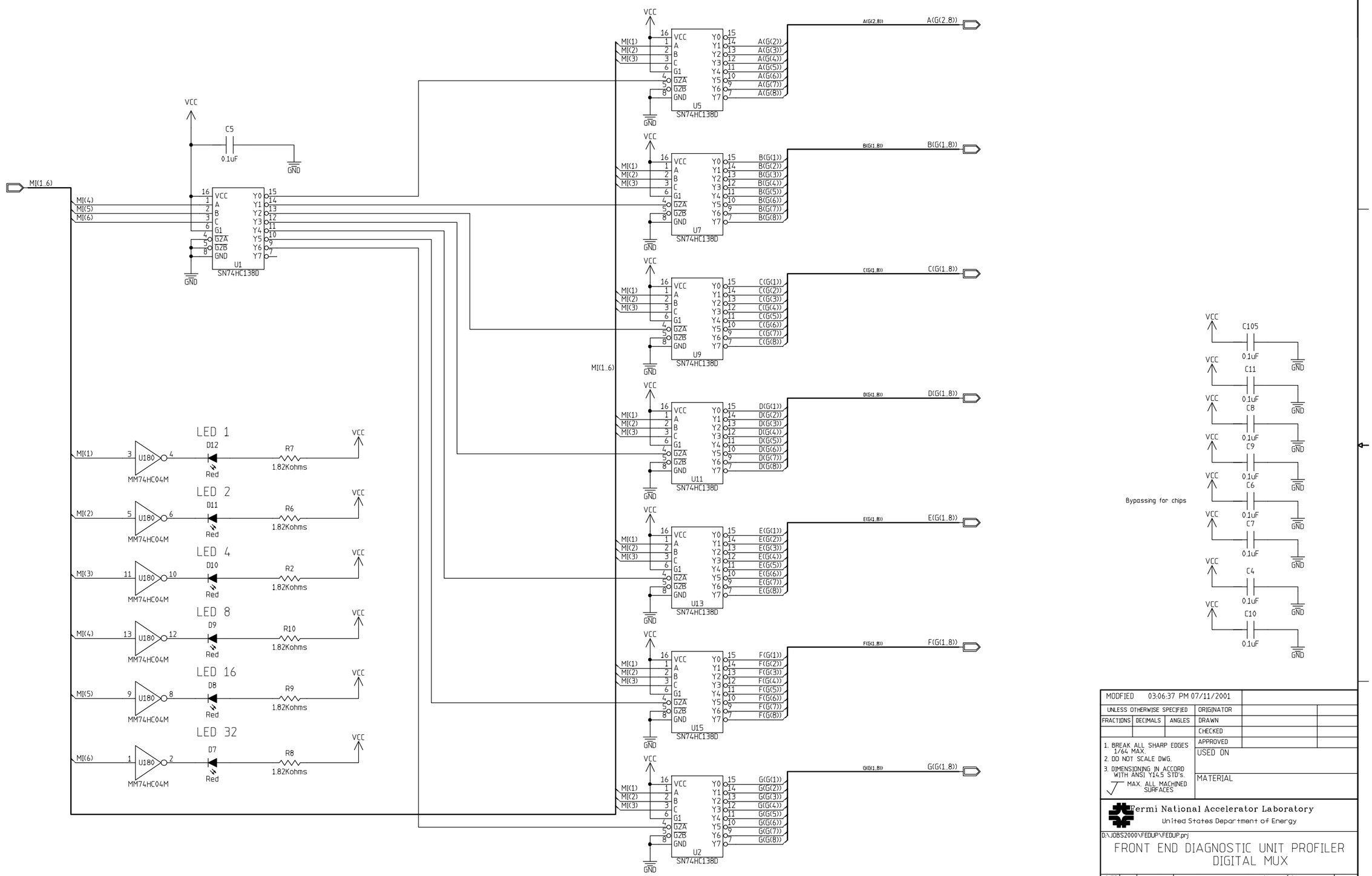
MI(1..6)
U1 SN74HC138D
C5 0.1uF
LED 1 D12 R7 1.82Kohms
LED 2 D11 R6 1.82Kohms
LED 4 D10 R2 1.82Kohms
LED 8 D9 R10 1.82Kohms
LED 16 D8 R9 1.82Kohms
LED 32 D7 R8 1.82Kohms
U180 MM74HC04M
U5 SN74HC138D A(G(2..8))
U7 SN74HC138D B(G(1..8))
U9 SN74HC138D C(G(1..8))
U11 SN74HC138D D(G(1..8))
U13 SN74HC138D E(G(1..8))
U15 SN74HC138D F(G(1..8))
U2 SN74HC138D G(G(1..8))
C105 C11 C8 C9 C6 C7 C4 C10 0.1uF
Bypassing for chips
MODIFIED 03:06:37 PM 07/11/2001
UNLESS OTHERWISE SPECIFIED
FRACTIONS DECIMALS ANGLES
ORIGINATOR
DRAWN
CHECKED
APPROVED
USED ON
MATERIAL
1. BREAK ALL SHARP EDGES 1/64 MAX.
2. DO NOT SCALE DWG.
3. DIMENSIONING IN ACCORD WITH ANSI Y14.5 STD's.
MAX. ALL MACHINED SURFACES
Fermi National Accelerator Laboratory
United States Department of Energy
D:\JOBS2000\FEDUP\FEDUP.prj
FRONT END DIAGNOSTIC UNIT PROFILER
DIGITAL MUX
SIZE D
SCALE 1:1
FILMED
DRAWING NUMBER
PAGE 01 of 01
REV A

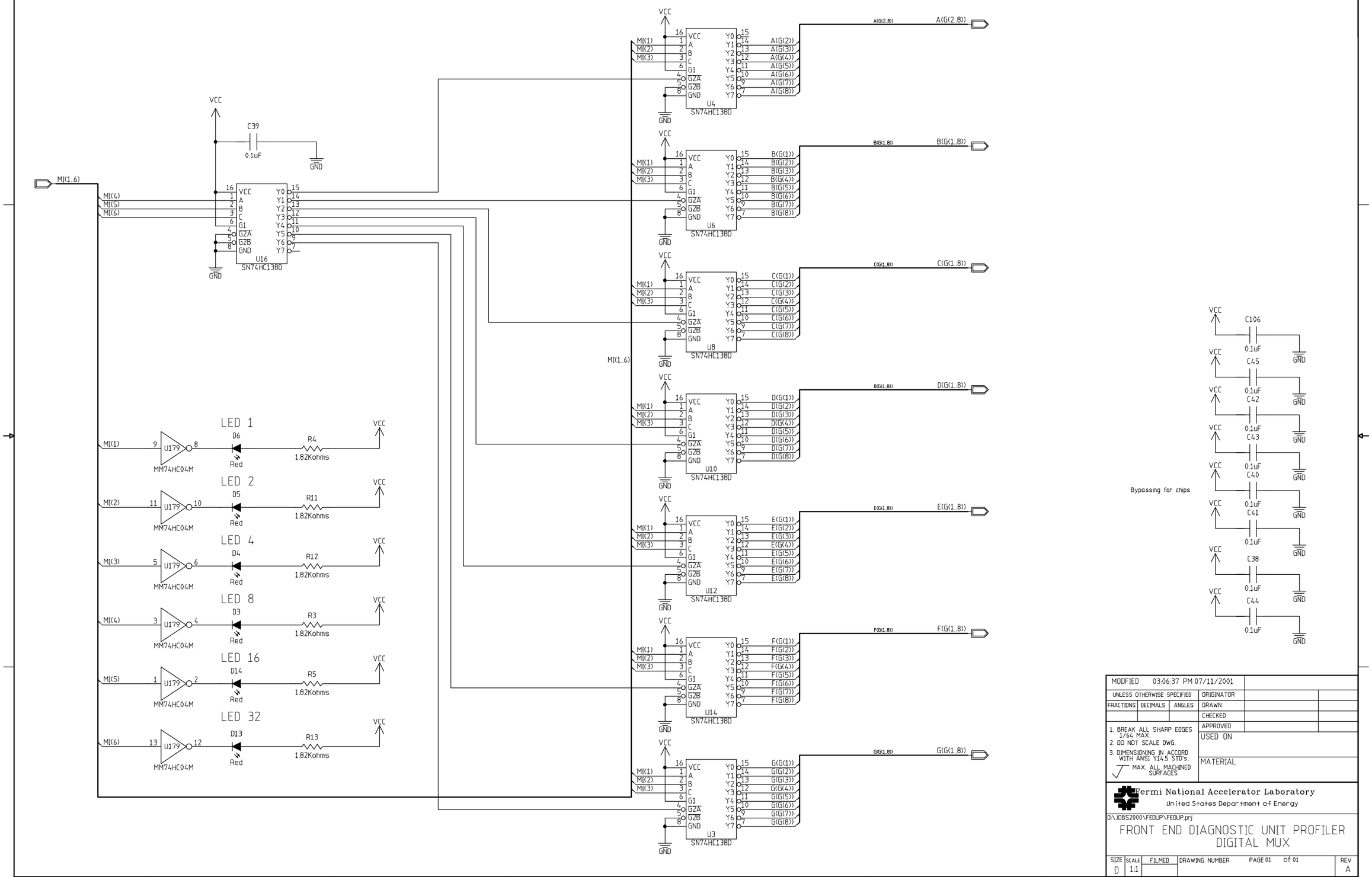

MI(1..6)
MI(4)
MI(5)
MI(6)
VCC
C39
0.1uF
GND
U16
SN74HC138D
U4
SN74HC138D
U6
SN74HC138D
U8
SN74HC138D
U10
SN74HC138D
U12
SN74HC138D
U14
SN74HC138D
U3
SN74HC138D
A(G(2..8))
B(G(1..8))
C(G(1..8))
D(G(1..8))
E(G(1..8))
F(G(1..8))
G(G(1..8))
LED 1
LED 2
LED 4
LED 8
LED 16
LED 32
U179
MM74HC04M
D6
D5
D4
D3
D14
D13
Red
R4
R11
R12
R3
R5
R13
1.82Kohms
C106
C45
C42
C43
C40
C41
C38
C44
Bypassing for chips
MODFIED 03:06:37 PM 07/11/2001
UNLESS OTHERWISE SPECIFIED
FRACTIONS DECIMALS ANGLES
ORIGINATOR
DRAWN
CHECKED
APPROVED
USED ON
MATERIAL
1. BREAK ALL SHARP EDGES 1/64 MAX.
2. DO NOT SCALE DWG.
3. DIMENSIONING IN ACCORD WITH ANSI Y14.5 STD's.
MAX. ALL MACHINED SURFACES
Fermi National Accelerator Laboratory
United States Department of Energy
D:\JOBS2000\FEDUP\FEDUP.prj
FRONT END DIAGNOSTIC UNIT PROFILER
DIGITAL MUX
SIZE D
SCALE 1:1
FILMED
DRAWING NUMBER
PAGE 01 of 01
REV A
H:8ND; V:4LA

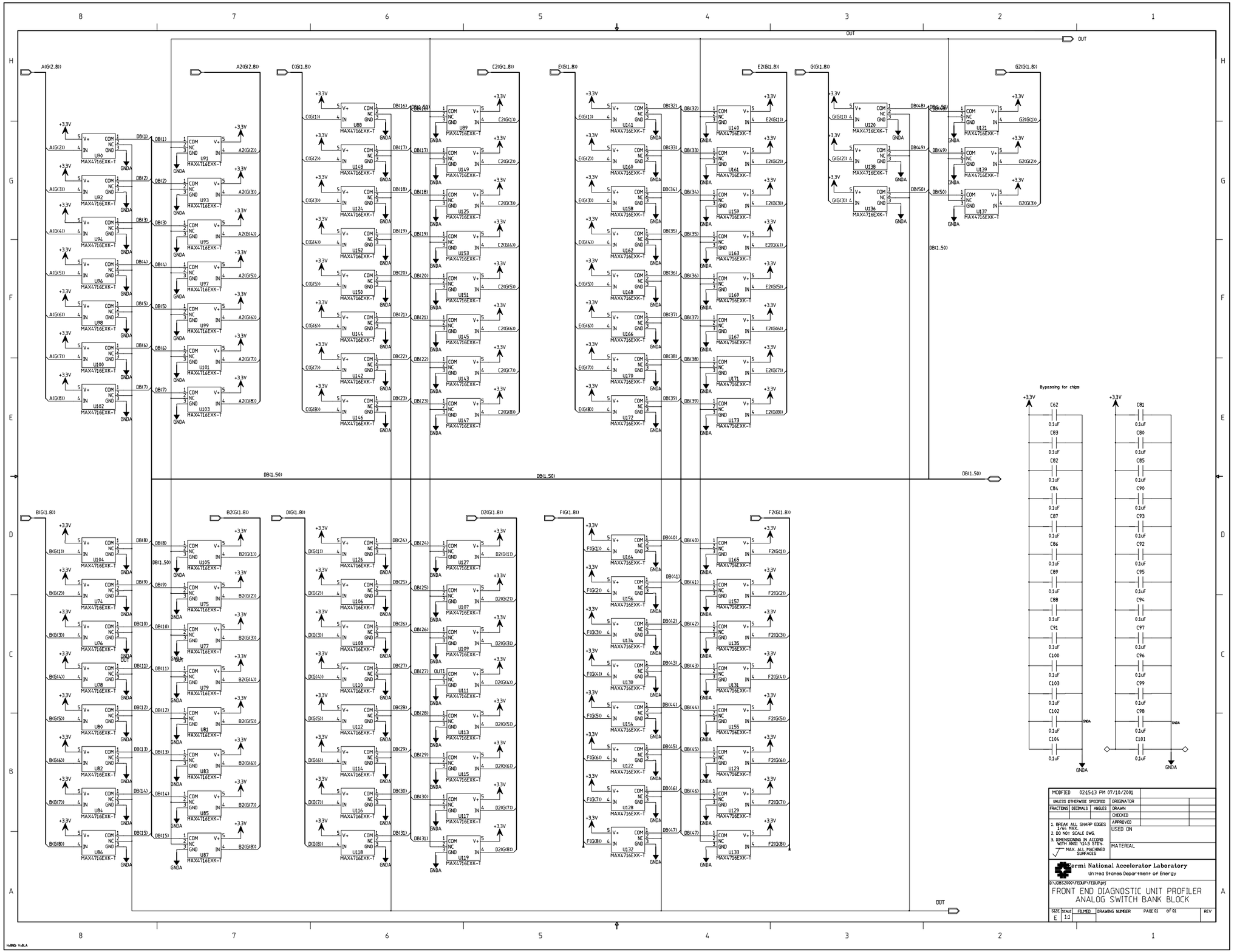
A(G(2..8))
A2(G(2..8))
C(G(1..8))
C2(G(1..8))
E(G(1..8))
E2(G(1..8))
G(G(1..8))
G2(G(1..8))
B(G(1..8))
B2(G(1..8))
D(G(1..8))
D2(G(1..8))
F(G(1..8))
F2(G(1..8))
OUT
DB(1..50)
Bypassing for chips
C62
C83
C82
C84
C87
C86
C89
C88
C91
C100
C103
C102
C104
C81
C80
C85
C90
C93
C92
C95
C94
C97
C96
C99
C98
C101
0.1uF
+3.3V
GNDA
MAX4716EXK-T
MODIFIED 02:51:13 PM 07/10/2001
UNLESS OTHERWISE SPECIFIED
FRACTIONS DECIMALS ANGLES
ORIGINATOR
DRAWN
CHECKED
APPROVED
USED ON
MATERIAL
1. BREAK ALL SHARP EDGES 1/64 MAX.
2. DO NOT SCALE DWG.
3. DIMENSIONING IN ACCORD WITH ANSI Y14.5 STD'S.
MAX. ALL MACHINED SURFACES
Fermi National Accelerator Laboratory
United States Department of Energy
G:\JOBS2000\FEDUP\FEDUP.prj
FRONT END DIAGNOSTIC UNIT PROFILER
ANALOG SWITCH BANK BLOCK
SIZE E
SCALE 1:1
FILMED
DRAWING NUMBER
PAGE 01 of 01
REV

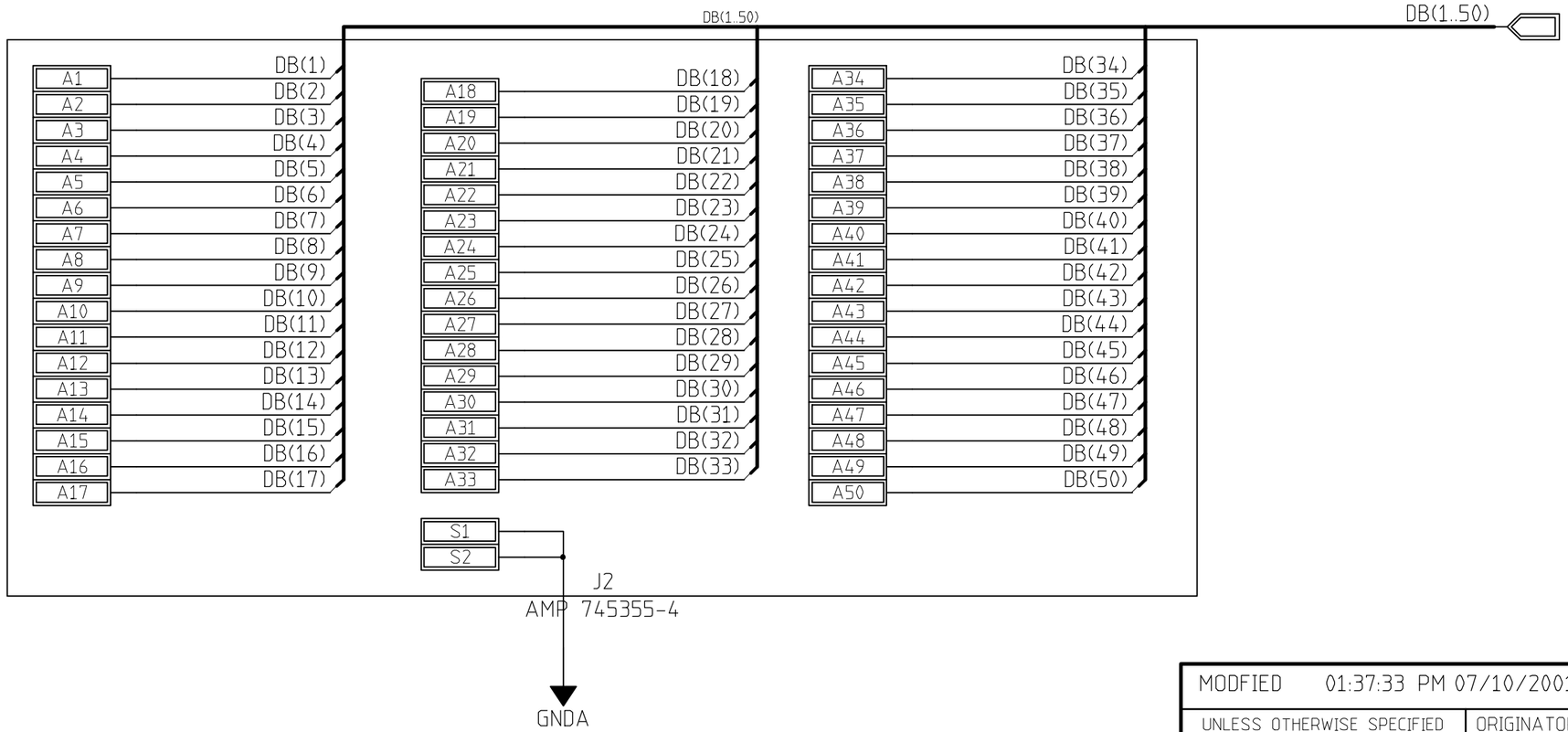

MODFIED 01:37:33 PM 07/10/2001					
UNLESS OTHERWISE SPECIFIED			ORIGINATOR		
FRACTIONS	DECIMALS	ANGLES	DRAWN		
			CHECKED		
1. BREAK ALL SHARP EDGES 1/64 MAX. 2. DO NOT SCALE DWG. 3. DIMENSIONING IN ACCORD WITH ANSI Y14.5 STD's. √ MAX. ALL MACHINED SURFACES			APPROVED		
			USED ON		
			MATERIAL		

Fermi National Accelerator Laboratory
United States Department of Energy

D:\JOBS2000\FEDUP\FEDUP.prj

FRONT END DIAGNOSTIC UNIT PROFILER 50 PIN D CONNECTOR

SIZE	SCALE	FILMED	DRAWING NUMBER	PAGE 01 of 01	REV
B	1:1				

H=2LA; V=2LA