SYMBOL LEDGEND

AGND — ANALOG GROUND PLANE

FEGND — FRONT END GROUND PLANE

GND — DIGITAL GROUND PLANE

V15P V15PFE +10R +5REF +5QD +5Q VCC

CONNECTIONS TO POWER PLANES

V15N V15NFE -10R -5REF -5QD -5Q

INTRA PAGE CONNECTION

EXTERNAL PAGE CONNECTION OUTPUT

EXTERNAL PAGE CONNECTION INPUT

BACKPLANE CONNECTOR PIN

BLOCK — INPUT PIN — OUTPUT PIN

SYMBOL

PAGE CONNECTOR DESIGNATIONS:

ANALOG CONTROL INPUT — ANALOG CONTROL OUTPUT

ANALOG SIGNAL INPUT — ANALOG SIGNAL OUTPUT

3-3(2C)

SECTION PAGE COORDINATES

REVISIONS

REV	DESCRIPTION	DATE	APPROVED

	NAME	DATE
ORIGINATOR	MERLE HALDEMAN	12/21/98
DRAWN	BRUCE MERKEL	12/21/98
CHECKED	TOM CRENNA	12/21/98
APPROVED		

FERMILAB PPD/ETT/ES CDMS (E-891)
ZIP MODULE DRAWING
SYMBOL LEGEND

SIZE	FSCM NO.	DWG. NO.	REV
A			

SCALE | SHEET COVER PAGE

REVISIONS			
REV	DESCRIPTION	DATE	APPROVED

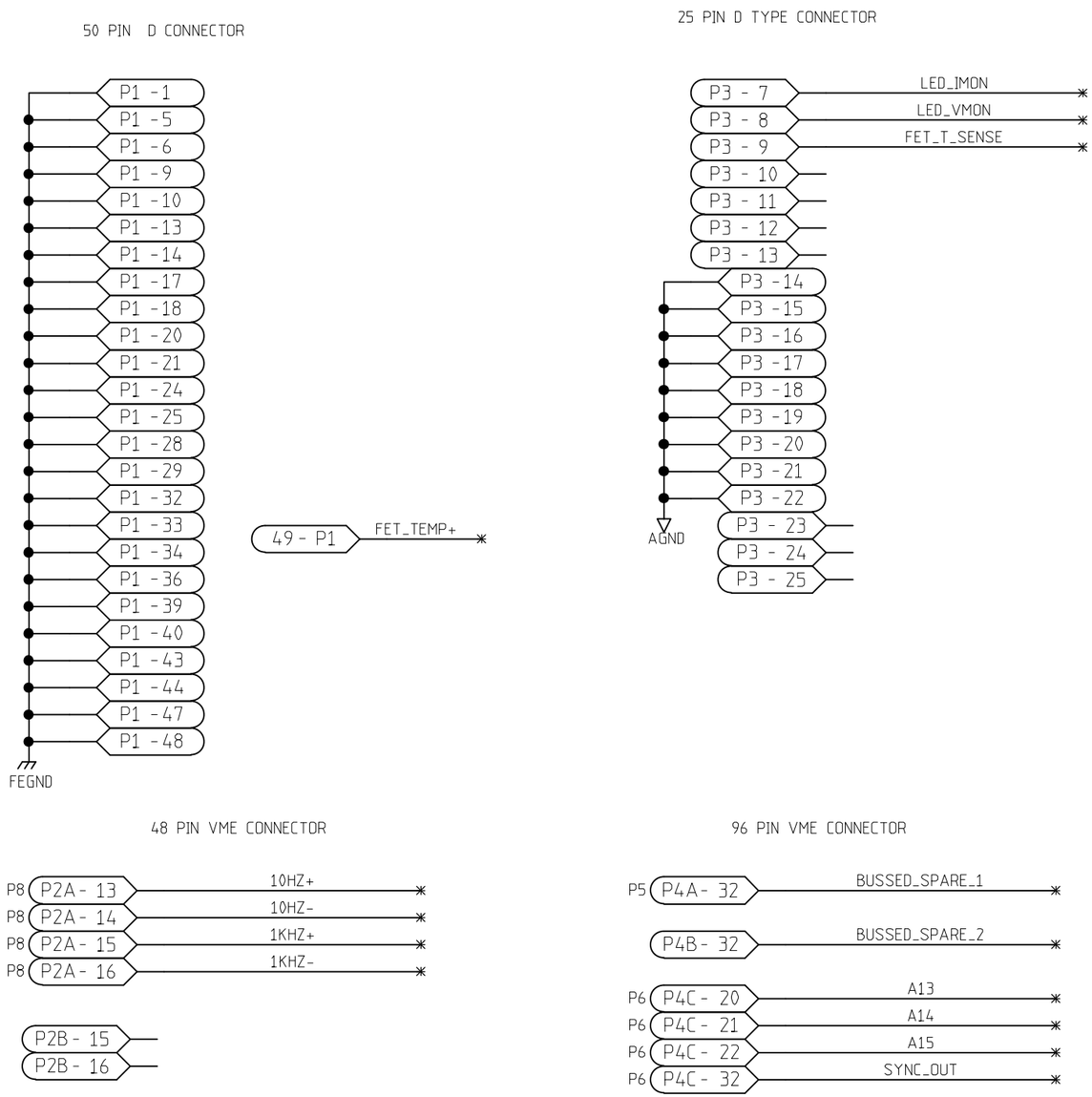

LEGENDS

	NAME	DATE
ORIGINATOR	MERLE HALDEMAN	11/18/98
DRAWN	BRUCE MERKEL	11/18/98
CHECKED	TOM CRENNA	12/9/98
APPROVED		

FERMILAB PPD/ETT/ES CDMS (E-891)
ZIP MODULE
MISC. CONNECTORS

SIZE	FSCM NO.	DWG. NO.	REV
B			
SCALE		SHEET 1-1	

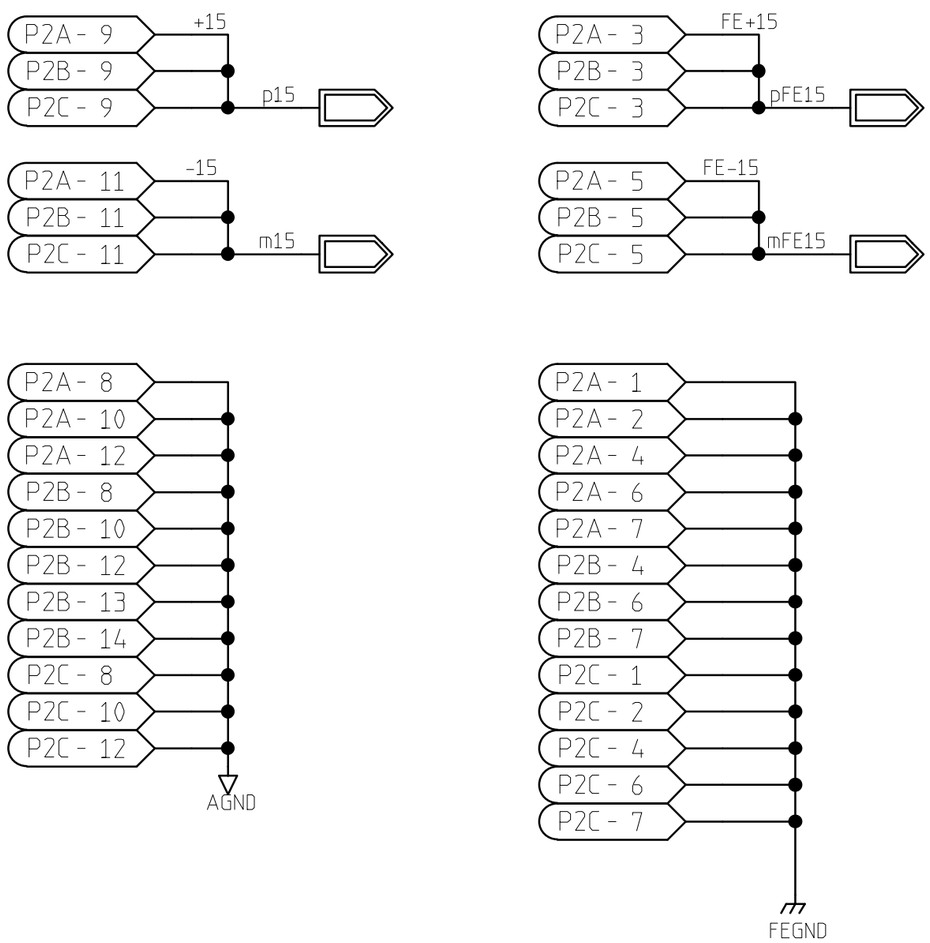

REVISIONS			
REV	DESCRIPTION	DATE	APPROVED

	NAME	DATE
ORIGINATOR	MERLE HALDEMAN	10/8/98
DRAWN	BRUCE MERKEL	10/8/98
CHECKED	TOM CRENNA	1/8/99
APPROVED		

FERMILAB PPD/ETT/ES CDMS (E-891)
ZIP MODULE
P2 BACKPLANE POWER CONNECTION

SIZE	FSCM NO.	DWG. NO.	REV
A			

SCALE		SHEET 1-2

P4
(96 PIN CONNECTOR)

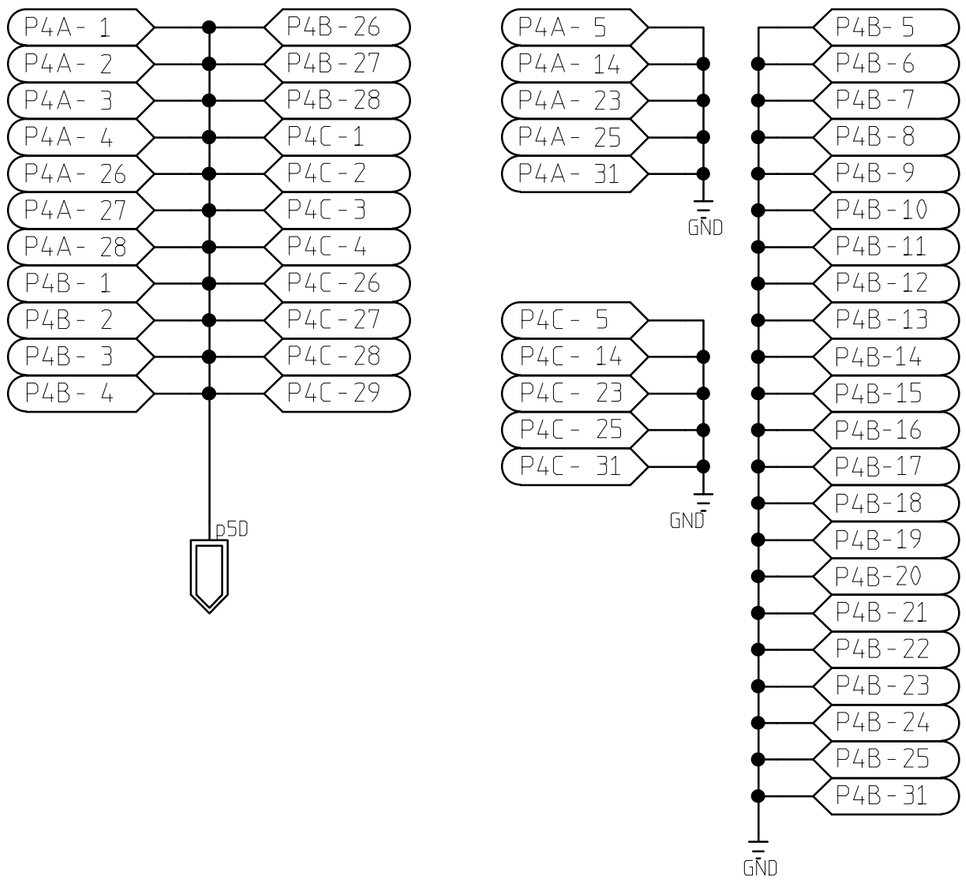

REVISIONS

REV	DESCRIPTION	DATE	APPROVED

	NAME	DATE
ORIGINATOR	MERLE HALDEMAN	10/8/98
DRAWN	BRUCE MERKEL	10/8/98
CHECKED	TOM CRENNA	1/8/99
APPROVED		

FERMILAB PPD/ETT/ES CDMS (E-891)
ZIP MODULE
P4 BACKPLANE POWER CONNECTION

SIZE	FSCM NO.	DWG. NO.	REV
A			

SCALE | SHEET 1-3

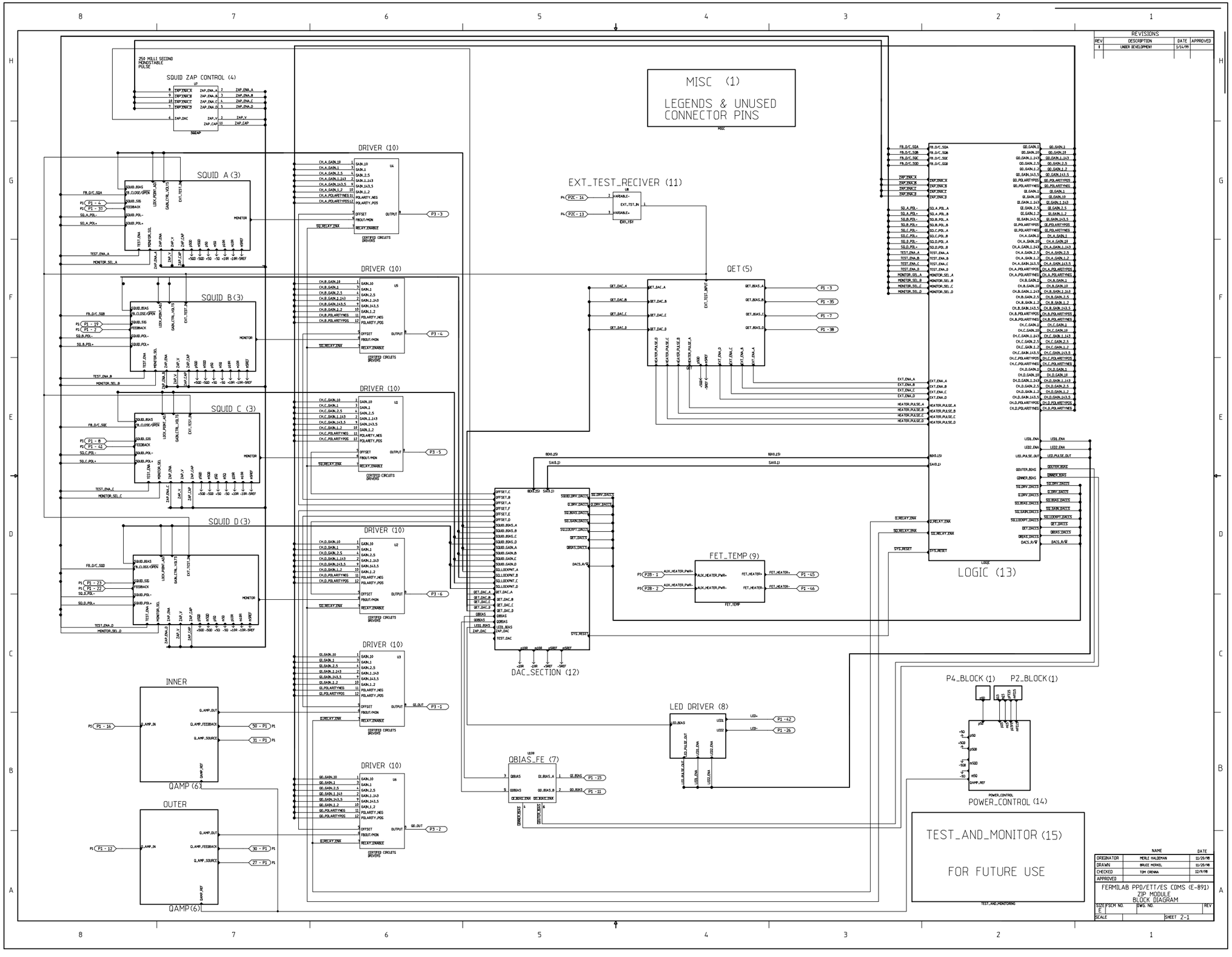

REVISIONS			
REV	DESCRIPTION	DATE	APPROVED
1	UNDER DEVELOPMENT	1/21/99	

	NAME	DATE
ORIGINATOR	MERLE HALDEMAN	11/25/98
DRAWN	BRUCE MERKEL	11/25/98
CHECKED	TOM CRONNA	12/9/98
APPROVED		

FERMILAB PPD/ETT/ES CDMS (E-891)
ZIP MODULE
BLOCK DIAGRAM

SIZE: E | FSCM NO: | DWG. NO: | REV:
SCALE | SHEET 2-1

REVISIONS			
REV	DESCRIPTION	DATE	APPROVED

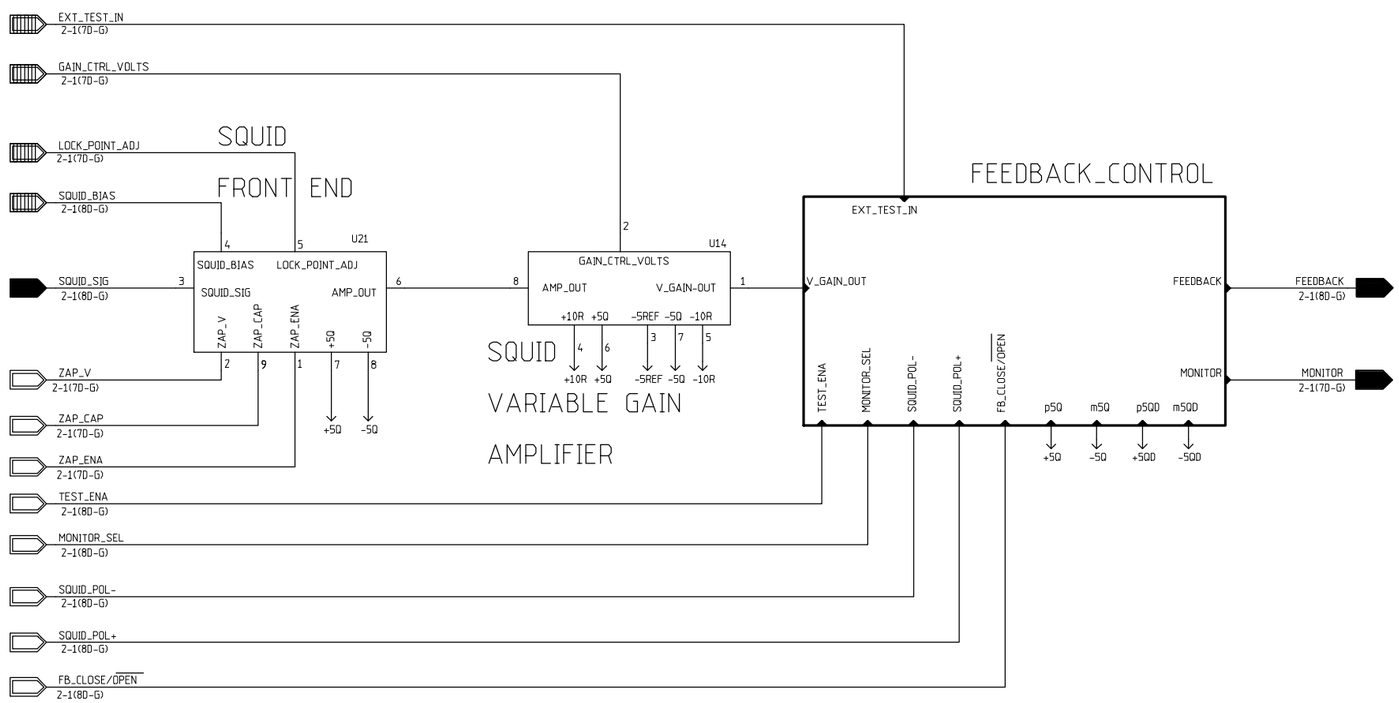

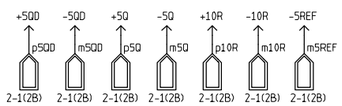

	NAME	DATE
ORIGINATOR	MERLE HALDEMAN	11/17/98
DRAWN	BRUCE MERKEL	11/17/98
CHECKED	TOM CRENNA	1/6/99
APPROVED		

FERMILAB PPD/ETT/ES CDMS (E-891)
ZIP MODULE
SQUID BLOCK DIAGRAM

SIZE	FSCM NO.	DWG. NO.	REV
C			
SCALE		SHEET 3-1	

REVISIONS			
REV	DESCRIPTION	DATE	APPROVED

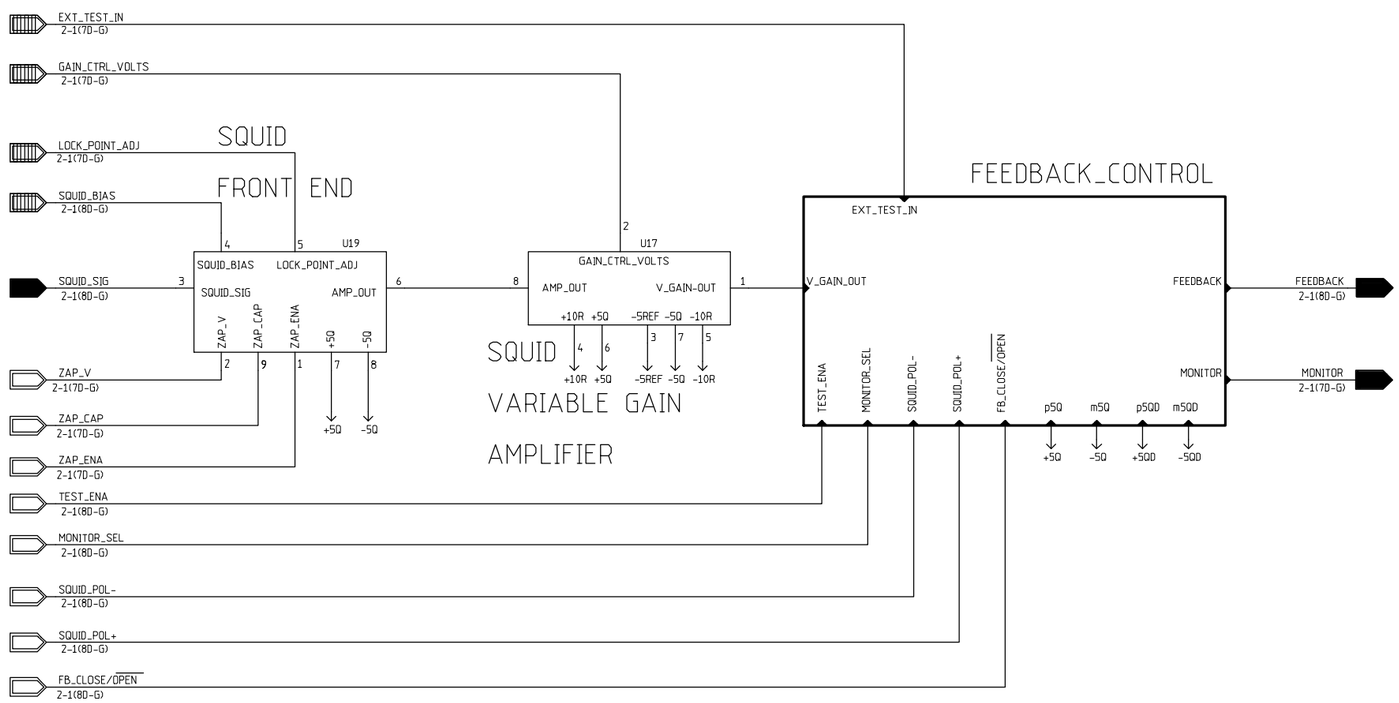

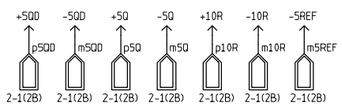

	NAME	DATE
ORIGINATOR	MERLE HALDEMAN	11/17/98
DRAWN	BRUCE MERKEL	11/17/98
CHECKED	TOM CRENNA	1/6/99
APPROVED		

FERMILAB PPD/ETT/ES CDMS (E-891)
ZIP MODULE
SQUID BLOCK DIAGRAM

SIZE	FSCM NO.	DWG. NO.	REV
C			
SCALE		SHEET 3-1	

REVISIONS			
REV	DESCRIPTION	DATE	APPROVED

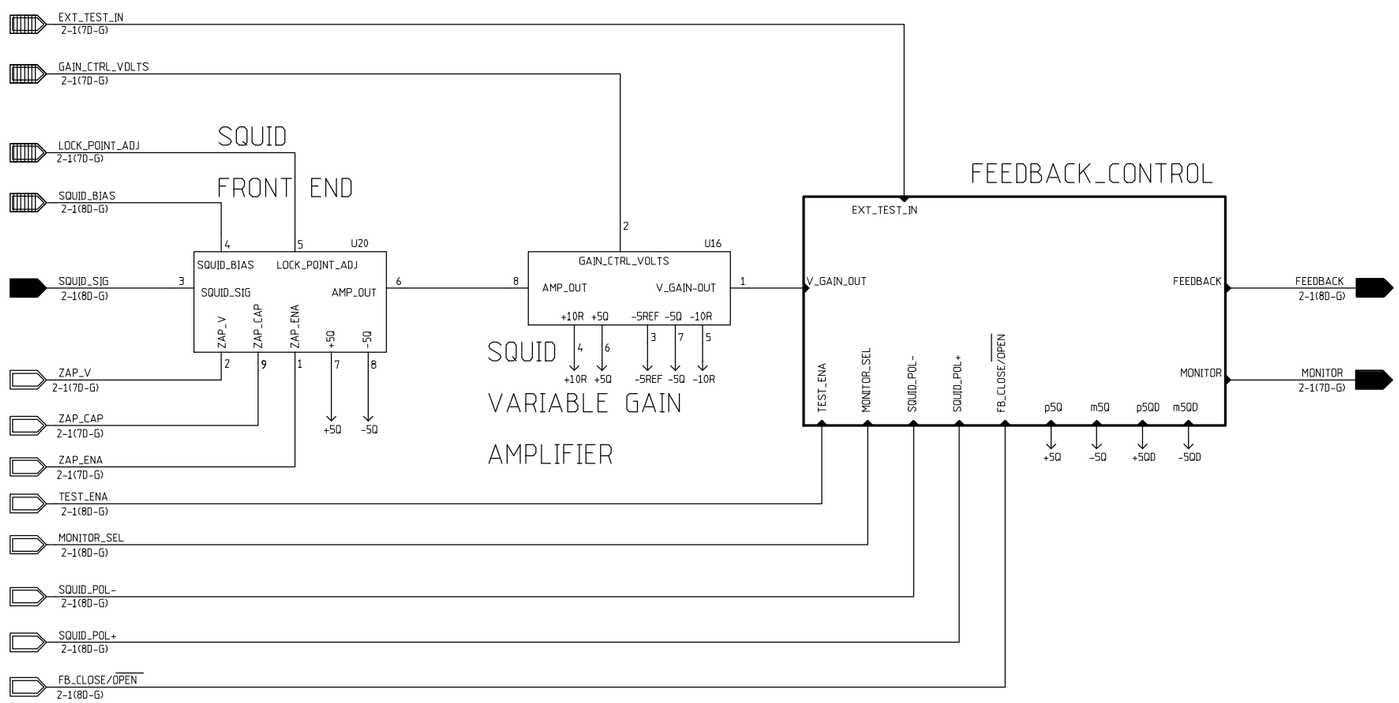

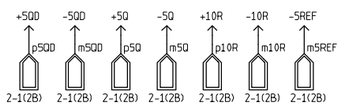

	NAME	DATE
ORIGINATOR	MERLE HALDEMAN	11/17/98
DRAWN	BRUCE MERKEL	11/17/98
CHECKED	TOM CRENNA	1/6/99
APPROVED		

FERMILAB PPD/ETT/ES CDMS (E-891)
ZIP MODULE
SQUID BLOCK DIAGRAM

SIZE	FSCM NO.	DWG. NO.	REV
C			
SCALE		SHEET 3-1	

REVISIONS			
REV	DESCRIPTION	DATE	APPROVED

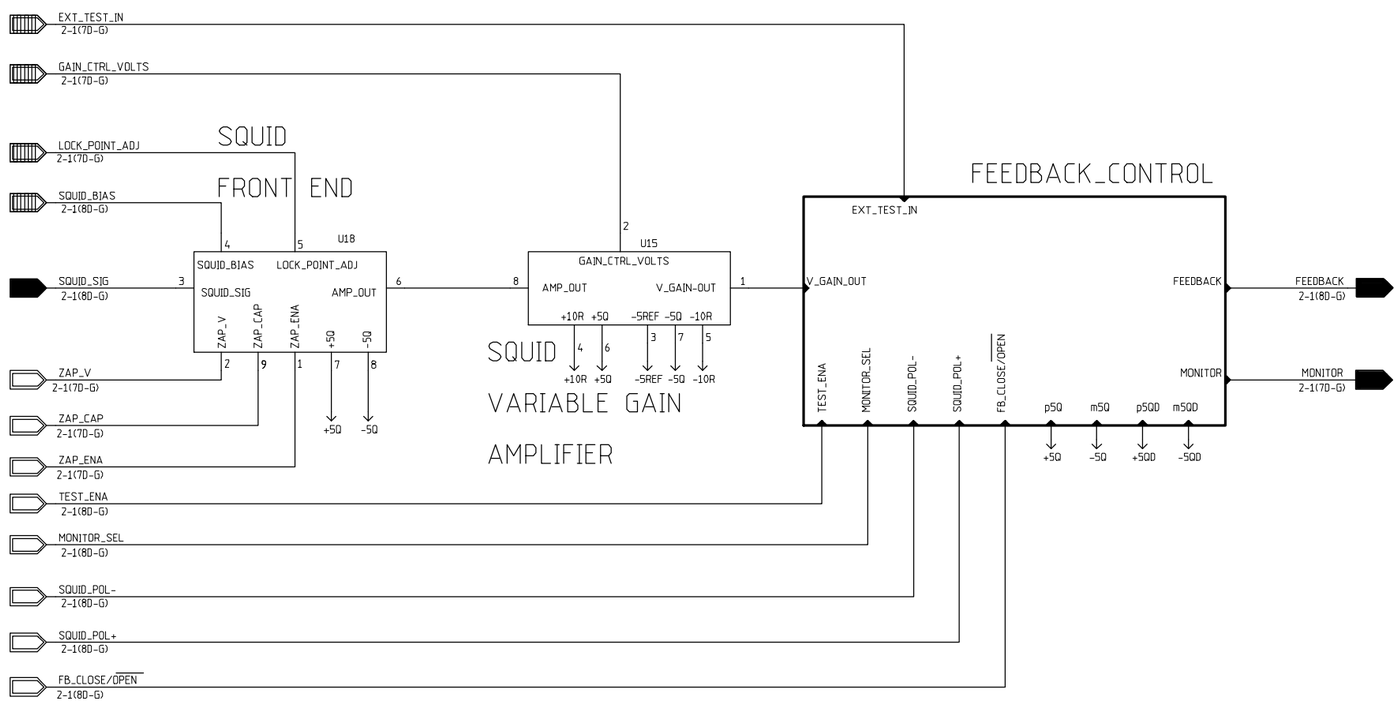

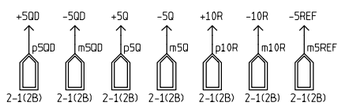

	NAME	DATE
ORIGINATOR	MERLE HALDEMAN	11/17/98
DRAWN	BRUCE MERKEL	11/17/98
CHECKED	TOM CRENNA	1/6/99
APPROVED		

FERMILAB PPD/ETT/ES CDMS (E-891)
ZIP MODULE
SQUID BLOCK DIAGRAM

SIZE	FSCM NO.	DWG. NO.	REV
C			
SCALE		SHEET 3-1	

REVISIONS			
REV	DESCRIPTION	DATE	APPROVED

RELAY SHOWN IN
DEENERGIZED STATE

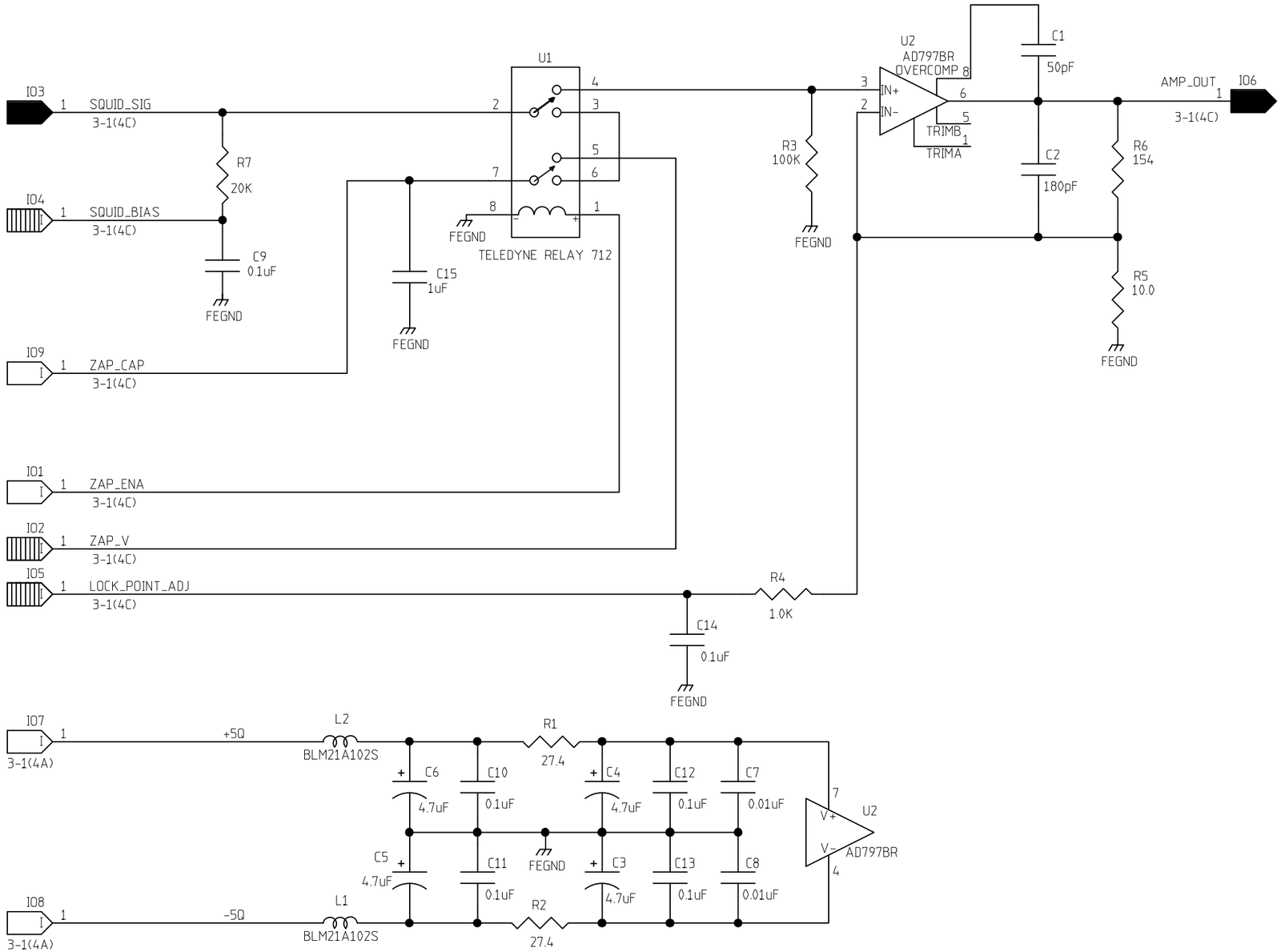

	NAME	DATE
ORIGINATOR	MERLE HALDEMAN	11/11/98
DRAWN	BRUCE MERKEL	11/11/98
CHECKED	TOM CRENNA	1/6/99
APPROVED		

FERMILAB PPD/ETT/ES CDMS (E-891)
ZIP MODULE
SQUID FRONT END

SIZE	FSCM NO.	DWG. NO.	REV
B			
SCALE		SHEET 3-2	

REVISIONS			
REV	DESCRIPTION	DATE	APPROVED

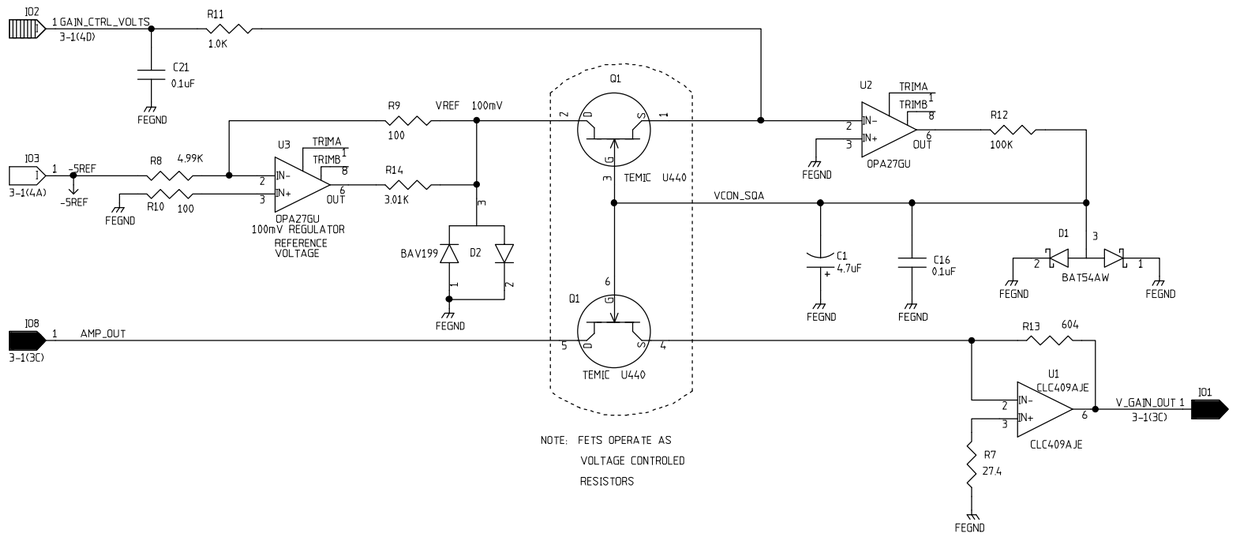

NOTE: FETS OPERATE AS
VOLTAGE CONTROLED
RESISTORS

VARIABLE GAIN AMPLIFIER

$$GAIN = R13 \times \frac{GVC}{100}$$

GCV = GAIN_CONTROL_VOLTAGE IN VOLTS

R13 IN OHMS

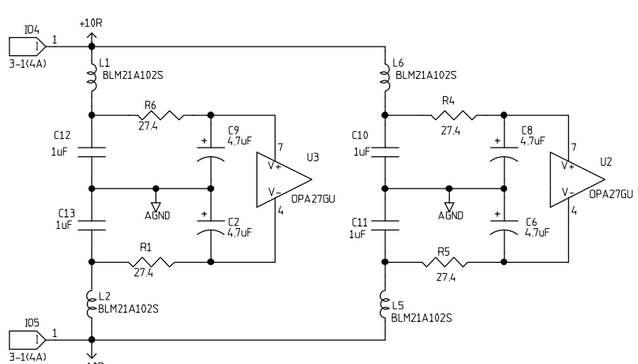

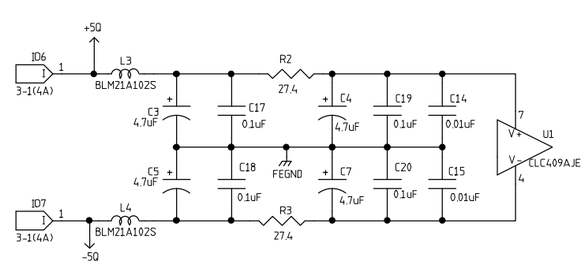

	NAME	DATE
ORIGINATOR	MERLE HALDEMAN	11/13/98
DRAWN	BRUCE MERKEL	11/13/98
CHECKED	TOM CRENNA	1/6/99
APPROVED		

FERMILAB PPD/ETT/ES CDMS (E-891)
ZIP MODULE
SQUID VARIABLE GAIN AMP

SIZE	FSCM NO.	DWG. NO.	REV
C			
SCALE		SHEET 3-3	

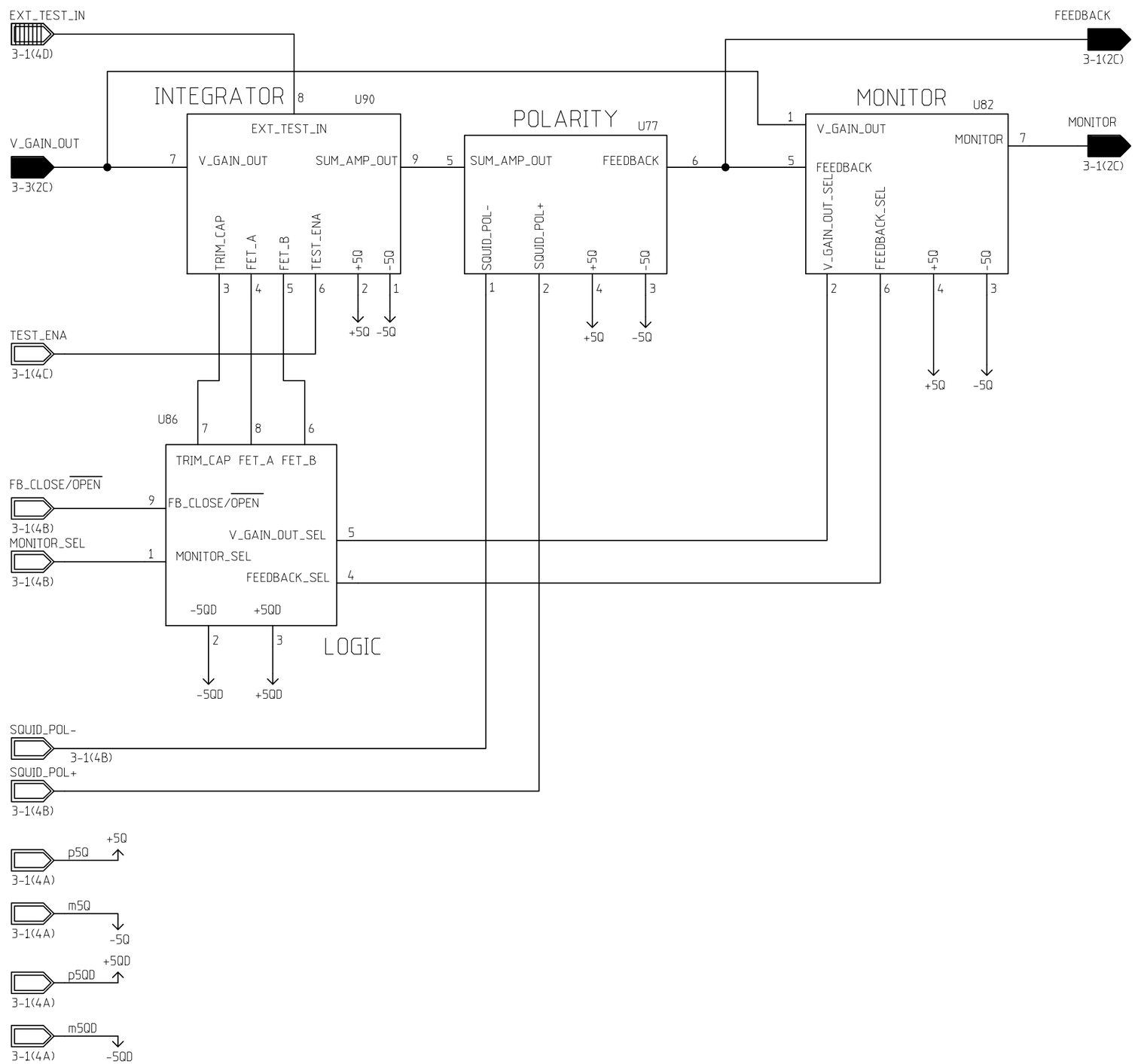

REVISIONS

REV	DESCRIPTION	DATE	APPROVED

	NAME	DATE
ORIGINATOR	MERLE HALDEMAN	11/13/98
DRAWN	BRUCE MERKEL	11/13/98
CHECKED	TOM CRENNA	1/6/99
APPROVED		

FERMILAB PPD/ETT/ES CDMS (E-891)
ZIP MODULE
SQUID FEEDBACK CONTROL

SIZE	FSCM NO.	DWG. NO.	REV
B			

SCALE | SHEET 3-4

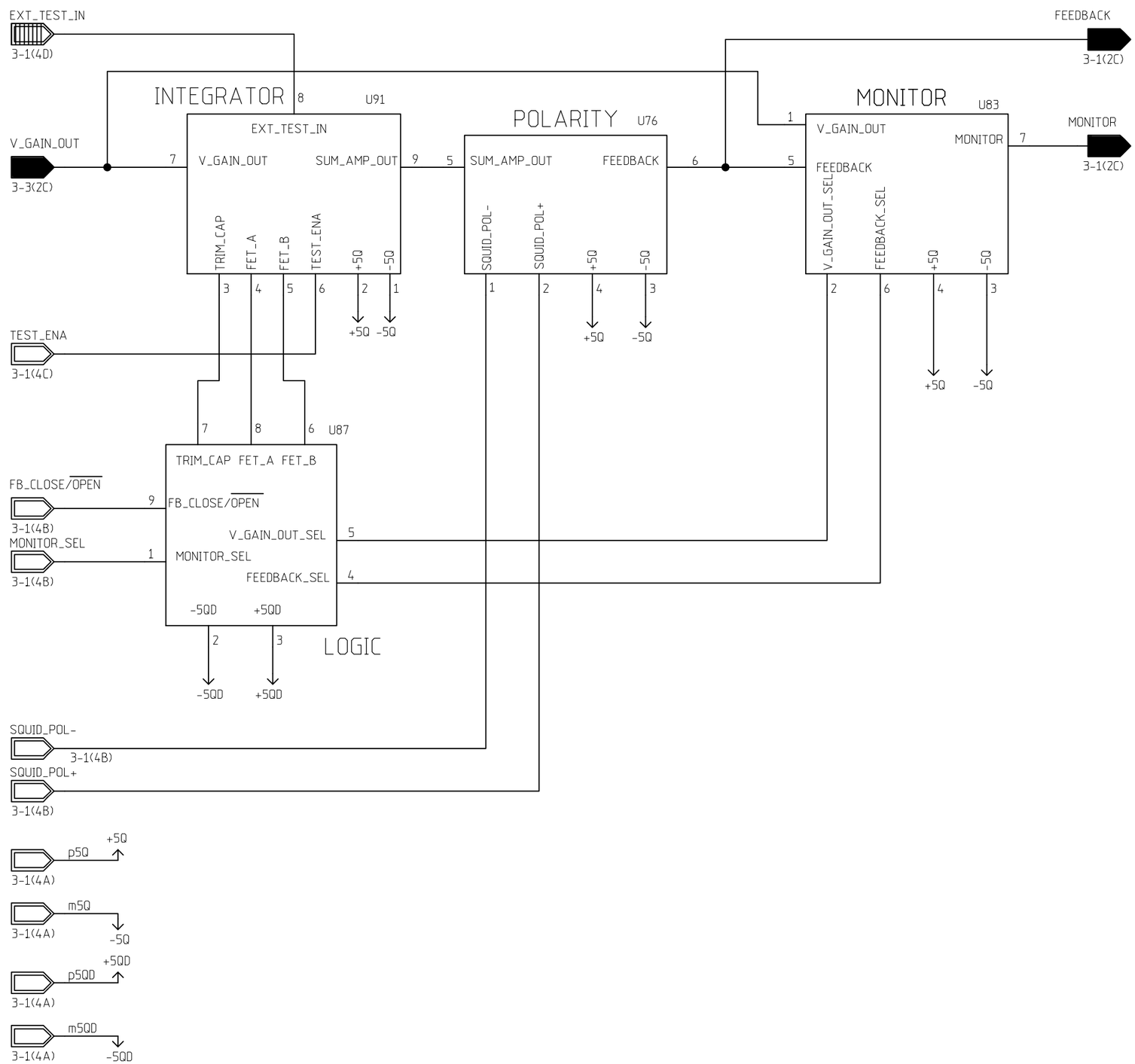

REVISIONS			
REV	DESCRIPTION	DATE	APPROVED

	NAME	DATE
ORIGINATOR	MERLE HALDEMAN	11/13/98
DRAWN	BRUCE MERKEL	11/13/98
CHECKED	TOM CRENNA	1/6/99
APPROVED		

FERMILAB PPD/ETT/ES CDMS (E-891)
ZIP MODULE
SQUID FEEDBACK CONTROL

SIZE	FSCM NO.	DWG. NO.	REV
B			

SCALE | SHEET 3-4

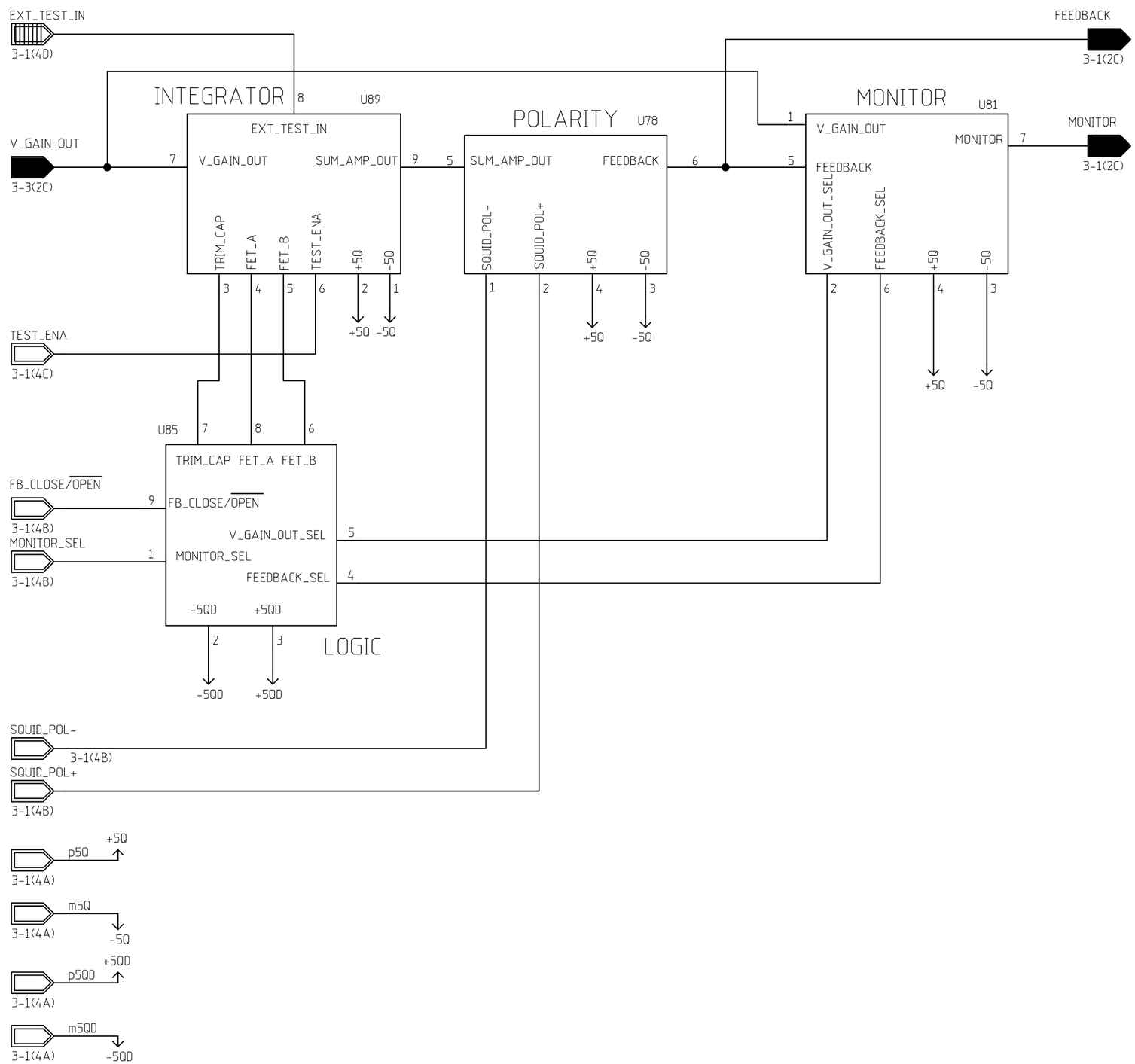

REVISIONS

REV	DESCRIPTION	DATE	APPROVED

	NAME	DATE
ORIGINATOR	MERLE HALDEMAN	11/13/98
DRAWN	BRUCE MERKEL	11/13/98
CHECKED	TOM CRENNA	1/6/99
APPROVED		

FERMILAB PPD/ETT/ES CDMS (E-891)
ZIP MODULE
SQUID FEEDBACK CONTROL

SIZE	FSCM NO.	DWG. NO.	REV
B			

SCALE | SHEET 3-4

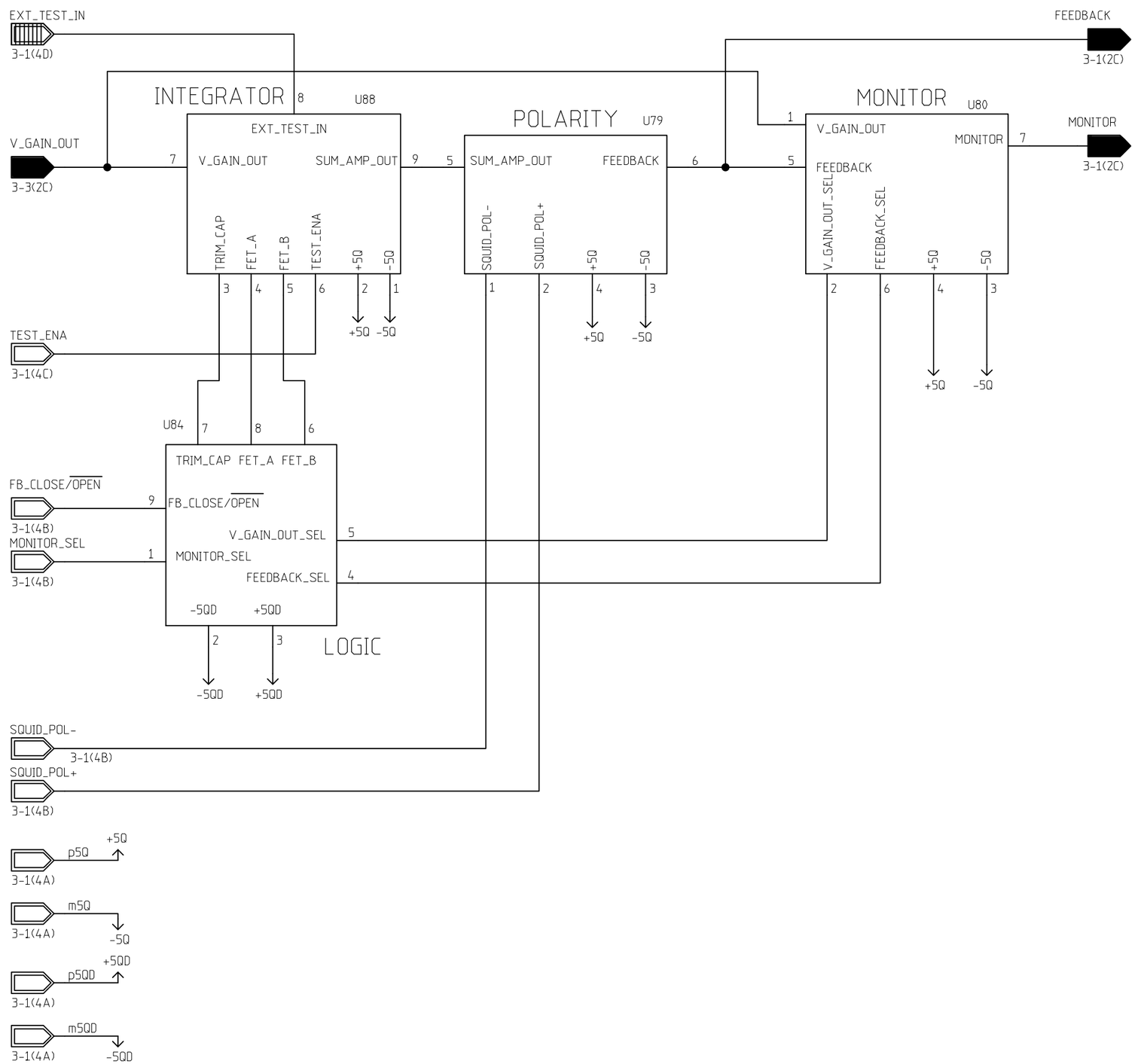

REVISIONS

REV	DESCRIPTION	DATE	APPROVED

	NAME	DATE
ORIGINATOR	MERLE HALDEMAN	11/13/98
DRAWN	BRUCE MERKEL	11/13/98
CHECKED	TOM CRENNA	1/6/99
APPROVED		

FERMILAB PPD/ETT/ES CDMS (E-891)
ZIP MODULE
SQUID FEEDBACK CONTROL

SIZE	FSCM NO.	DWG. NO.	REV
B			

SCALE | SHEET 3-4

REVISIONS			
REV	DESCRIPTION	DATE	APPROVED

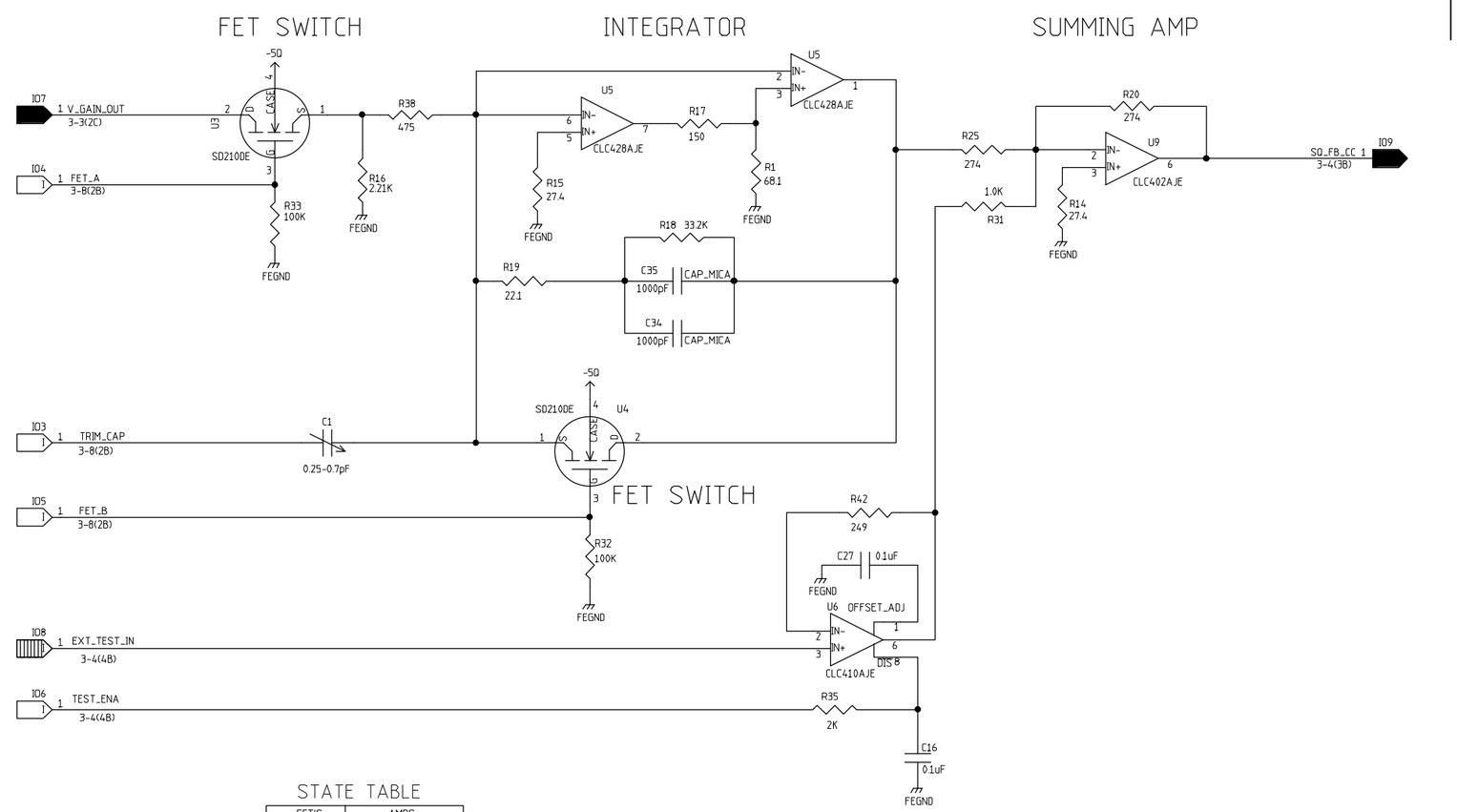

STATE TABLE

	FET'S		AMPS		
FB_O/C	U3	U4	U6	U7	U8
LOW	O	C	E	D	E
HI	C	O	D	E	D

O = OPEN C = CLOSED
E = ENABLE D = DISABLE

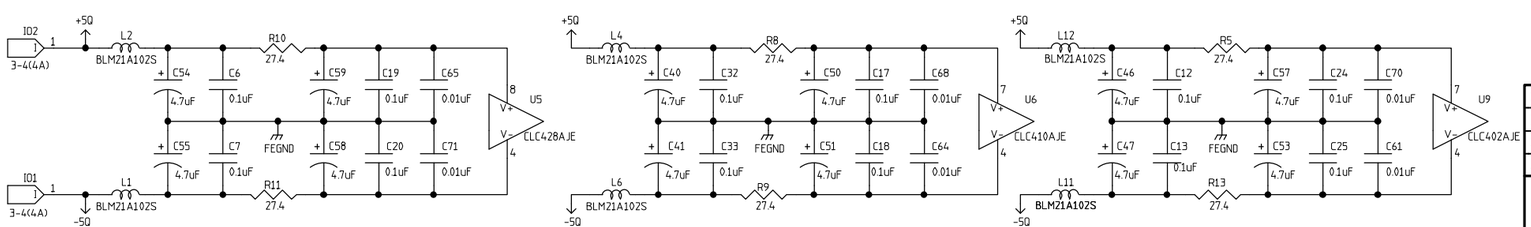

	NAME	DATE
ORIGINATOR	MERLE HALDEMAN	11/13/98
DRAWN	BRUCE MERKEL	11/13/98
CHECKED	TOM CRENNA	1/6/99
APPROVED		

FERMILAB PPD/ETT/ES CDMS (E-891)
ZIP MODULE
SQUID FEEDBACK INTEGRATOR

SIZE	FSCM NO.	DWG. NO.	REV
C			
SCALE		SHEET 3-5	

REVISIONS			
REV	DESCRIPTION	DATE	APPROVED

POLARITY SELECTION

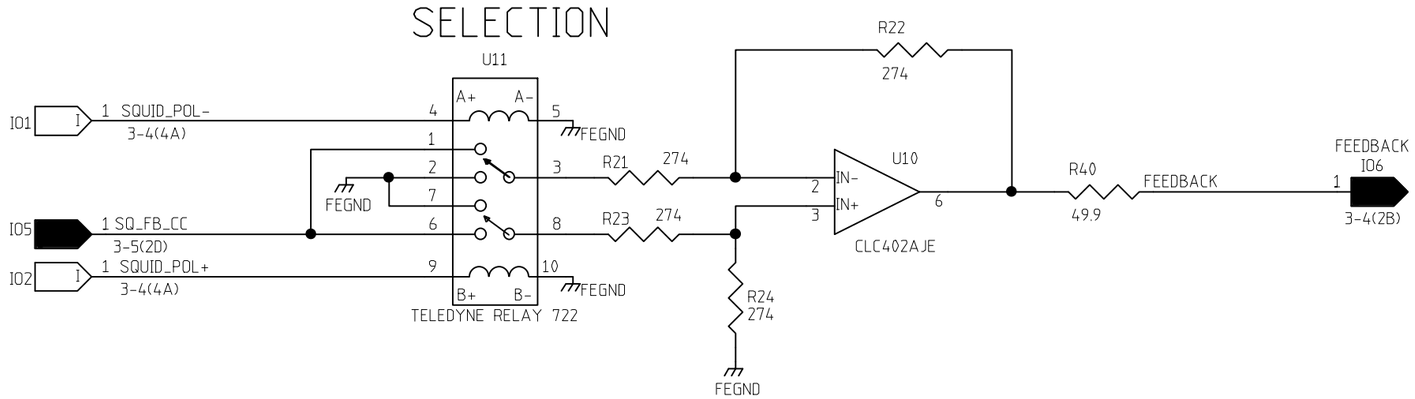

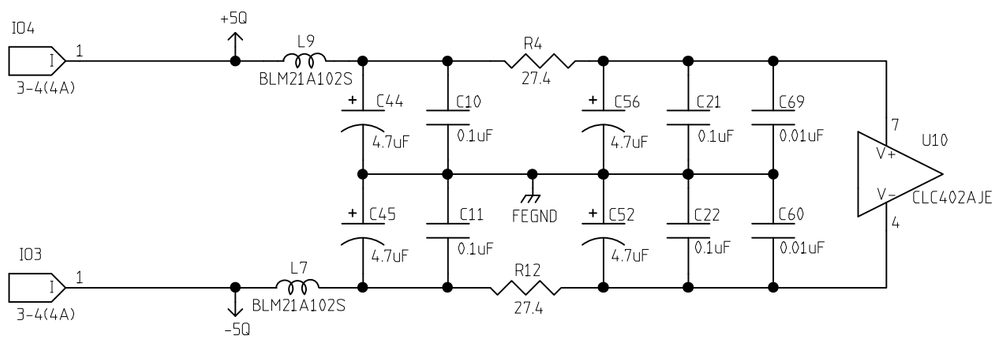

	NAME	DATE
ORIGINATOR	MERLE HALDEMAN	11/13/98
DRAWN	BRUCE MERKEL	11/13/98
CHECKED	TOM CRENNA	1/6/99
APPROVED		

FERMILAB PPD/ETT/ES CDMS (E-891)
ZIP MODULE
SQUID FEEDBACK POLARITY

SIZE	FSCM NO.	DWG. NO.	REV
B			
SCALE		SHEET 3-6	

REVISIONS			
REV	DESCRIPTION	DATE	APPROVED

MONITOR SELECTION

AMPLIFIERS

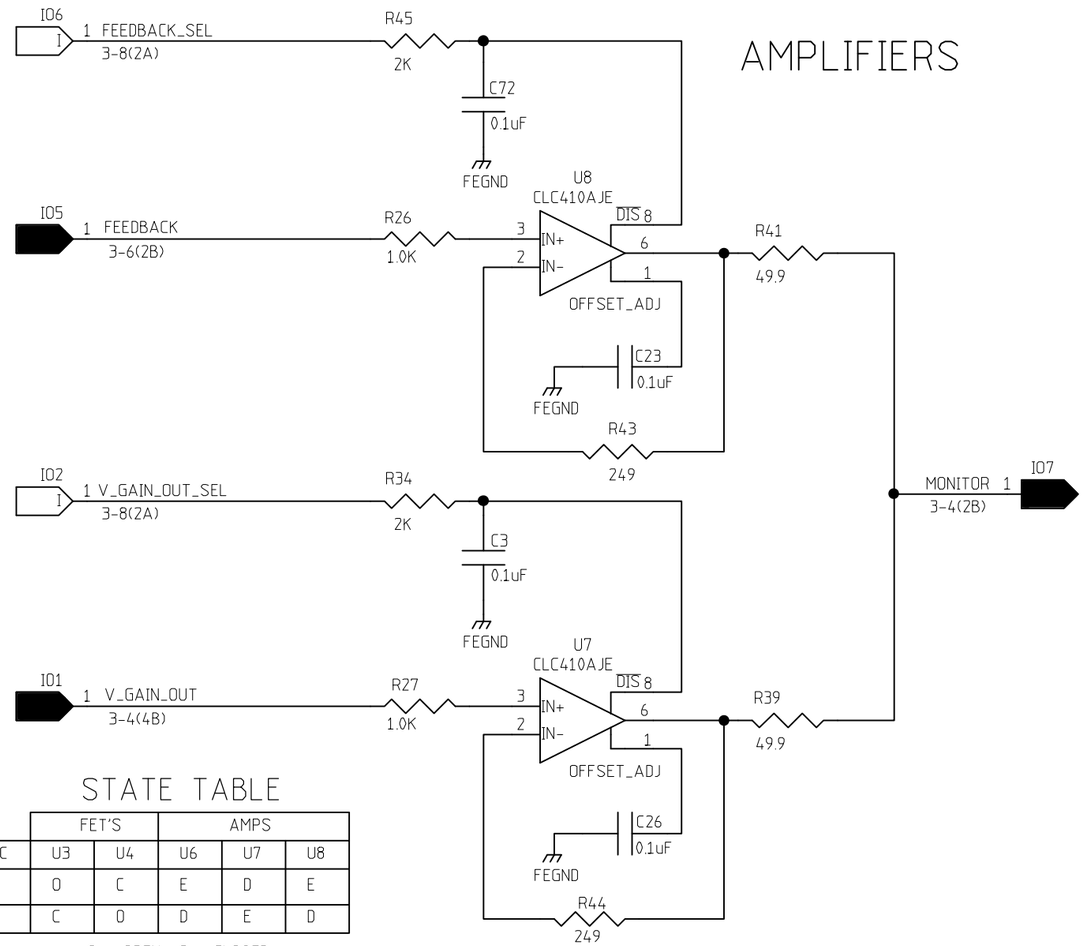

STATE TABLE

	FET'S		AMPS		
FB_O/C	U3	U4	U6	U7	U8
LOW	O	C	E	D	E
HI	C	O	D	E	D

O = OPEN C = CLOSED
E = ENABLE D = DISABLE

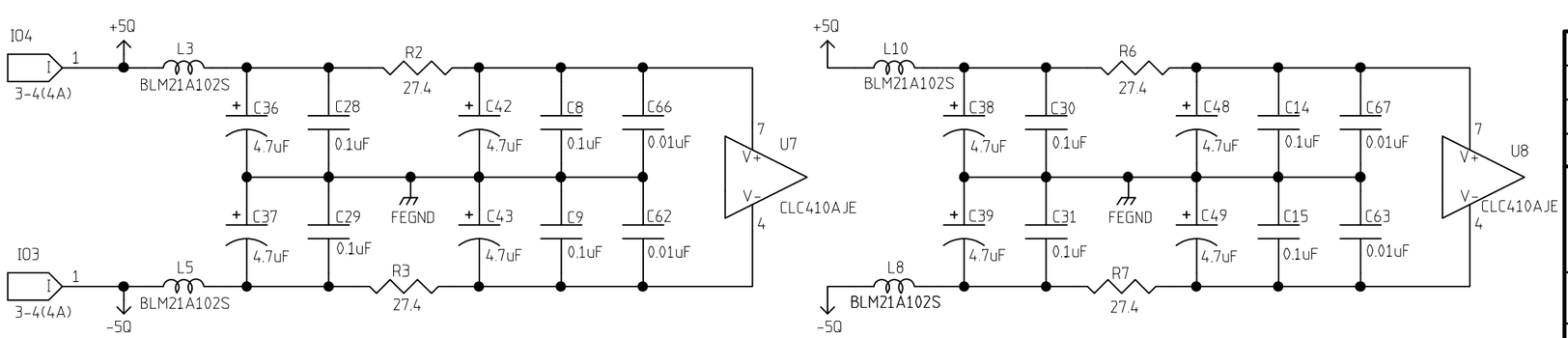

	NAME	DATE
ORIGINATOR	MERLE HALDEMAN	11/13/98
DRAWN	BRUCE MERKEL	11/13/98
CHECKED	TOM CRENNA	1/6/99
APPROVED		

FERMILAB PPD/ETT/ES CDMS (E-891)
ZIP MODULE
SQUID FEEDBACK MONITOR

SIZE	FSCM NO.	DWG. NO.	REV
B			
SCALE		SHEET 3-7	

REVISIONS			
REV	DESCRIPTION	DATE	APPROVED

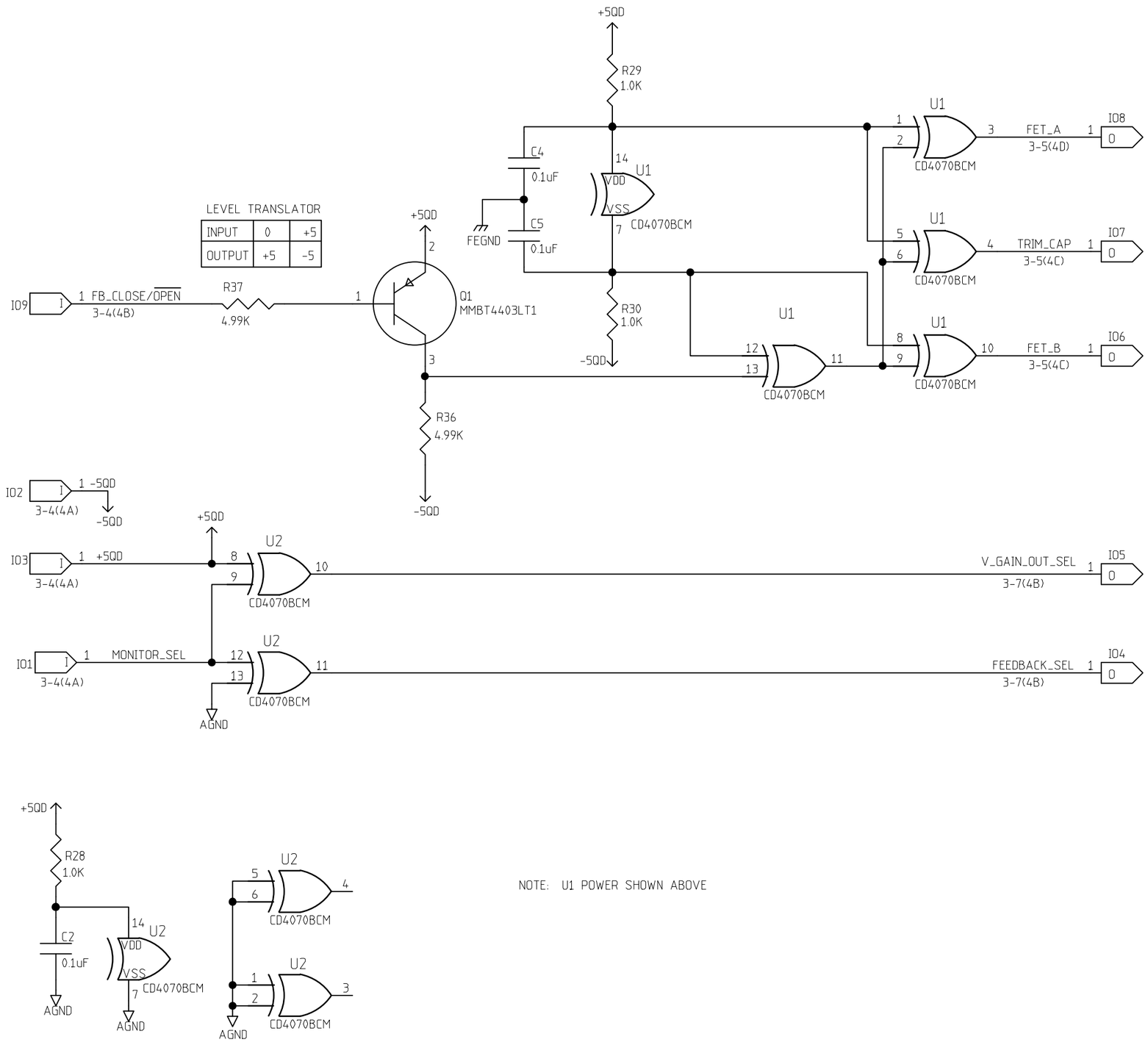

NOTE: U1 POWER SHOWN ABOVE

	NAME	DATE
ORIGINATOR	MERLE HALDEMAN	11/16/98
DRAWN	BRUCE MERKEL	11/16/98
CHECKED	TOM CRENNA	1/6/99
APPROVED		

FERMILAB PPD/ETT/ES CDMS (E-891)
ZIP MODULE
SQUID FEEDBACK LOGIC

SIZE	FSCM NO.	DWG. NO.	REV
B			
SCALE		SHEET 3-8	

REVISIONS			
REV	DESCRIPTION	DATE	APPROVED

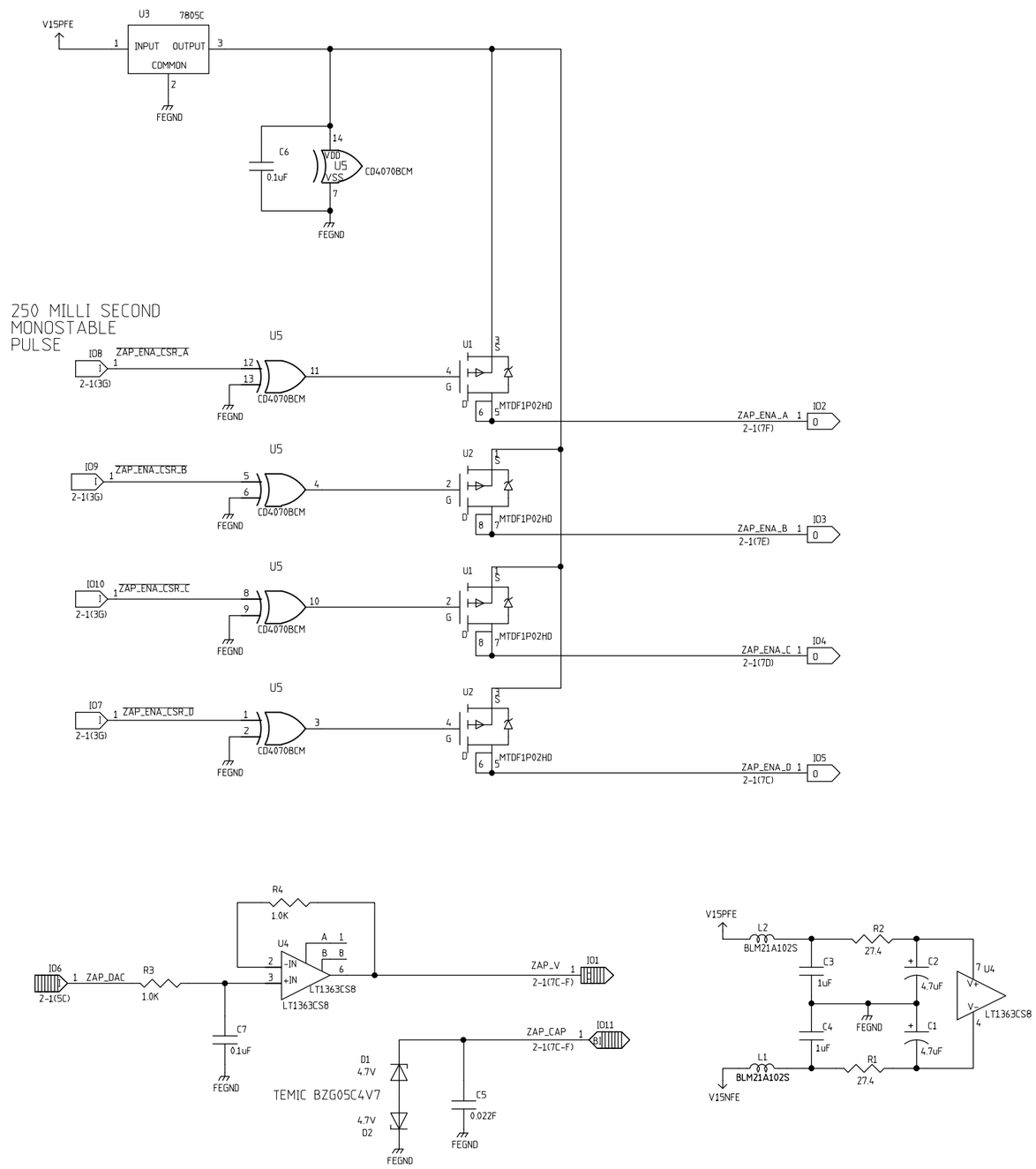

REVISED 1/11/99 BRUCE MERKEL

	NAME	DATE
ORIGINATOR	MERLE HALDEMAN	11/17/98
DRAWN	BRUCE MERKEL	11/17/98
CHECKED	TOM CRENNA	1/6/99
APPROVED		

FERMILAB PPD/ETT/ES CDMS (E-891)
ZIP MODULE
SQUID ZAP CONTROL

SIZE	FSCM NO.	DWG. NO.	REV
C			
SCALE		SHEET 4-1	

DWG. NO.	SH.	REV

REVISIONS			
REV	DESCRIPTION	DATE	APPROVED
0	UNDER DEVELOPMENT	1-20-99	

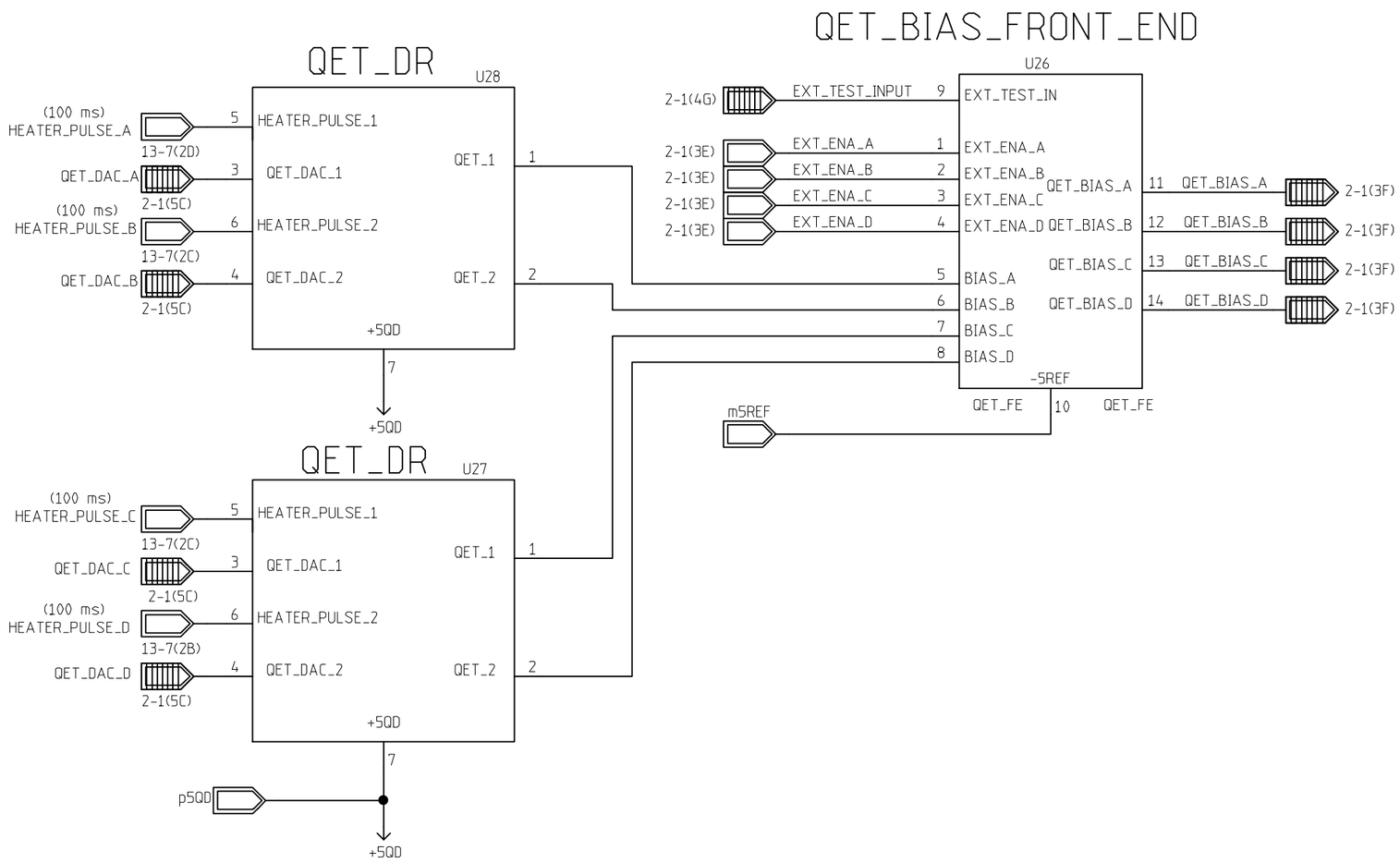

	NAME	DATE
ORIGINATOR	MERLE HALDEMAN	11/16/98
DRAWN	BRUCE MERKEL	11/16/98
CHECKED	TOM CRENNA	1/6/99
APPROVED		

FERMILAB PPD/ETT/ES CDMS (E-891)
ZIP MODULE
QET BLOCK DIAGRAM

SIZE	FSCM NO.	DWG. NO.	REV
B			

SCALE | SHEET 5-1

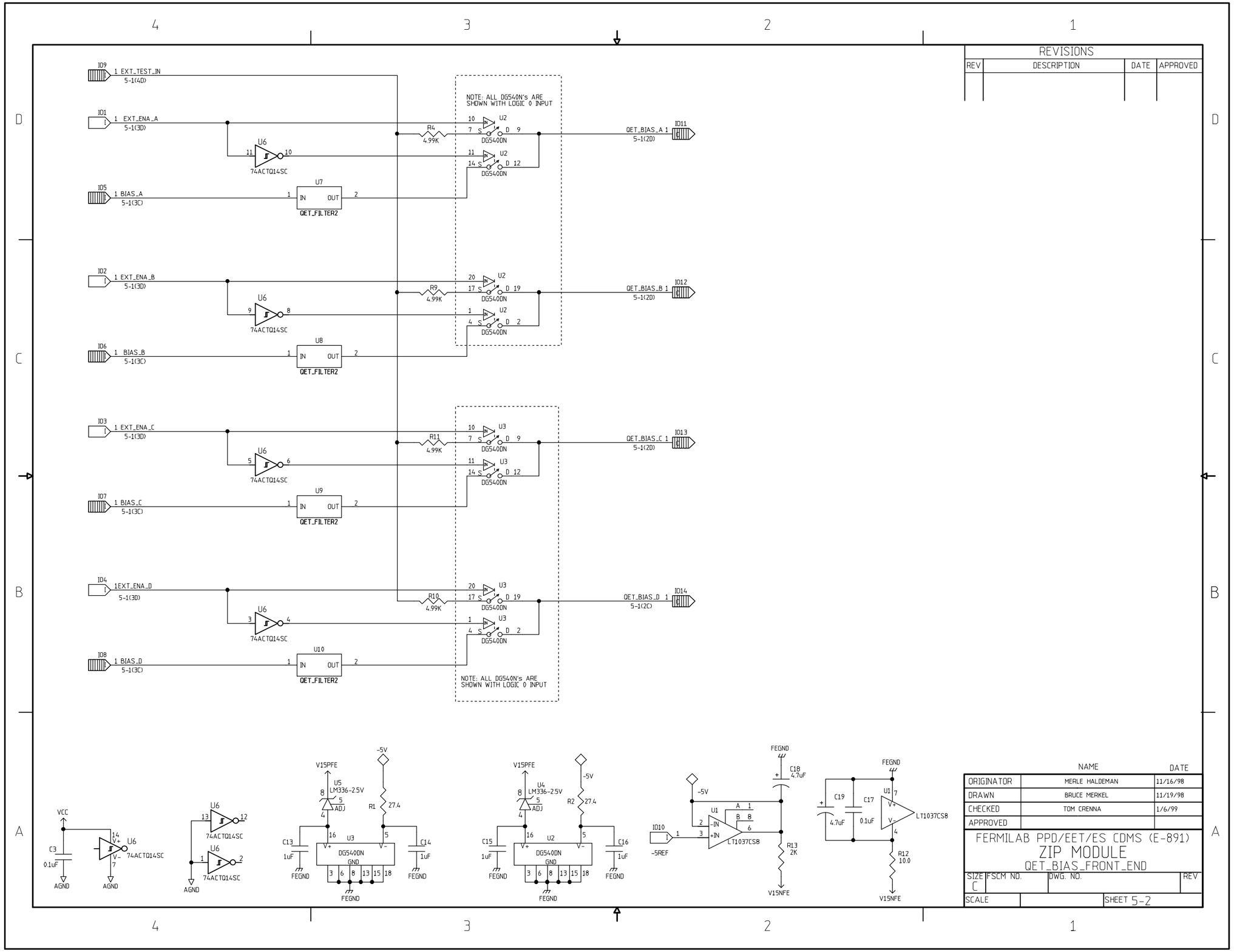

REVISIONS			
REV	DESCRIPTION	DATE	APPROVED

	NAME	DATE
ORIGINATOR	MERLE HALDEMAN	11/16/98
DRAWN	BRUCE MERKEL	11/19/98
CHECKED	TOM CRENNA	1/6/99
APPROVED		

FERMILAB PPD/EET/ES CDMS (E-891)

ZIP MODULE

QET_BIAS_FRONT_END

SIZE	FSCM NO.	DWG. NO.	REV
C			
SCALE		SHEET 5-2	

REVISIONS			
REV	DESCRIPTION	DATE	APPROVED

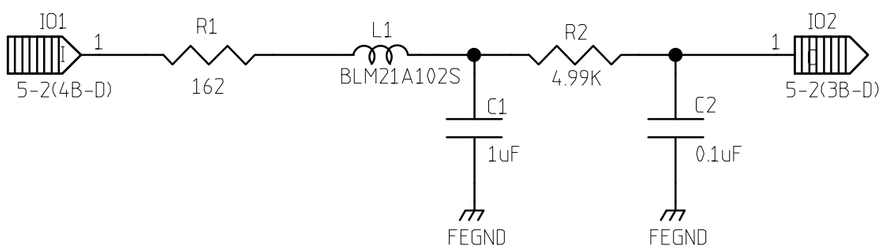

	NAME	DATE
ORIGINATOR	MERLE HALDEMAN	11/16/98
DRAWN	BRUCE MERKEL	11/19/98
CHECKED	TOM CRENNA	1/6/99
APPROVED		

FERMILAB PPD/EET/ES CDMS (E-891)

ZIP MODULE

QET_BIAS_FRONT_END FILTER

SIZE	FSCM NO.	DWG. NO.	REV
A			

SCALE		SHEET 5-3

DWG. NO.	SH.	REV

REVISIONS

REV	DESCRIPTION	DATE	APPROVED

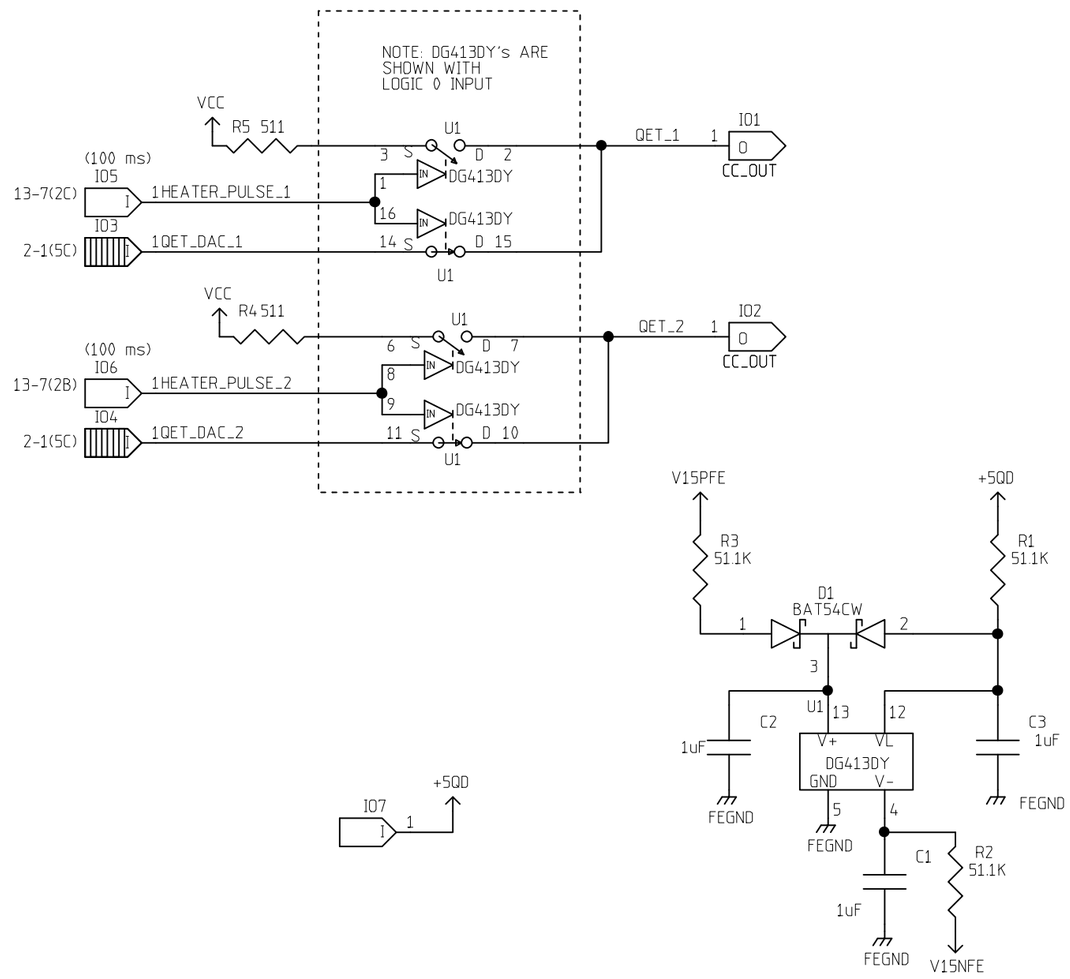

	NAME	DATE
ORIGINATOR	MERLE HALDEMAN	11/16/98
DRAWN	BRUCE MERKEL	11/16/98
CHECKED	TOM CRENNA	1/6/99
APPROVED		

FERMILAB PPD/ETT/ES CDMS (E-891)
ZIP MODULE
QET SELECTOR

SIZE	FSCM NO.	DWG. NO.	REV
B			

SCALE | SHEET 5-1

REVISIONS			
REV	DESCRIPTION	DATE	APPROVED

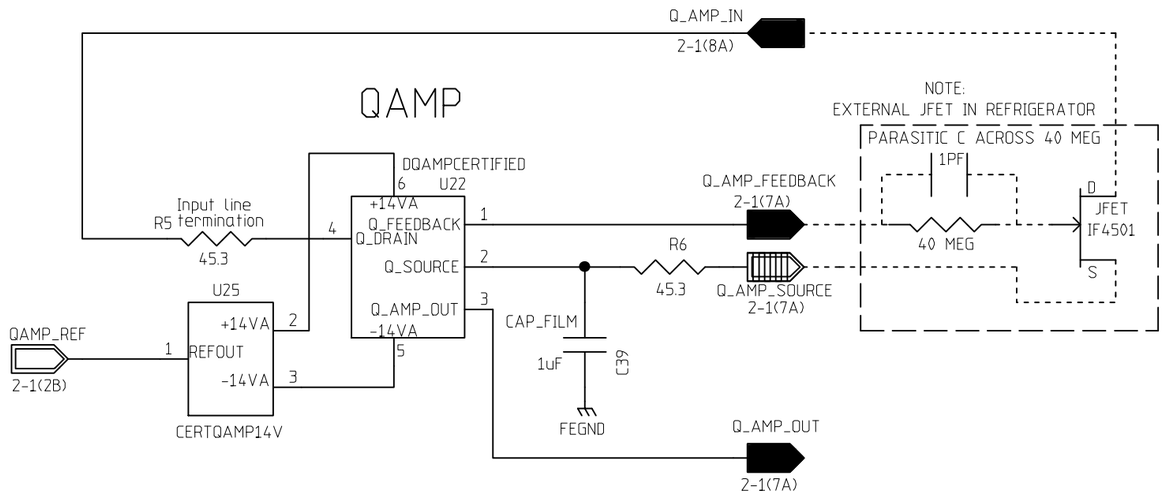

	NAME	DATE
ORIGINATOR	MERLE HALDEMAN	11/16/98
DRAWN	BRUCE MERKEL	11/16/98
CHECKED	TOM CRENNA	1/6/99
APPROVED		

FERMILAB PPD/ETT/ES CDMS (E-891)
ZIP MODULE
QAMP BLOCK DIAGRAM

SIZE	FSCM NO.	DWG. NO.	REV
B			
SCALE		SHEET 6-1	

REVISIONS			
REV	DESCRIPTION	DATE	APPROVED

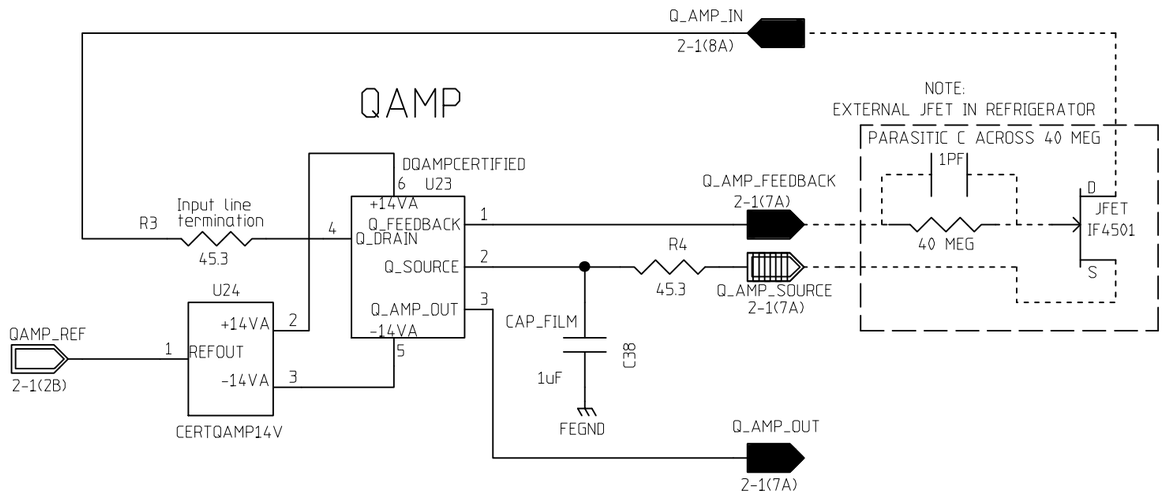

	NAME	DATE
ORIGINATOR	MERLE HALDEMAN	11/16/98
DRAWN	BRUCE MERKEL	11/16/98
CHECKED	TOM CRENNA	1/6/99
APPROVED		

FERMILAB PPD/ETT/ES CDMS (E-891)
ZIP MODULE
QAMP BLOCK DIAGRAM

SIZE	FSCM NO.	DWG. NO.	REV
B			
SCALE		SHEET 6-1	

REVISIONS			
REV	DESCRIPTION	DATE	APPROVED

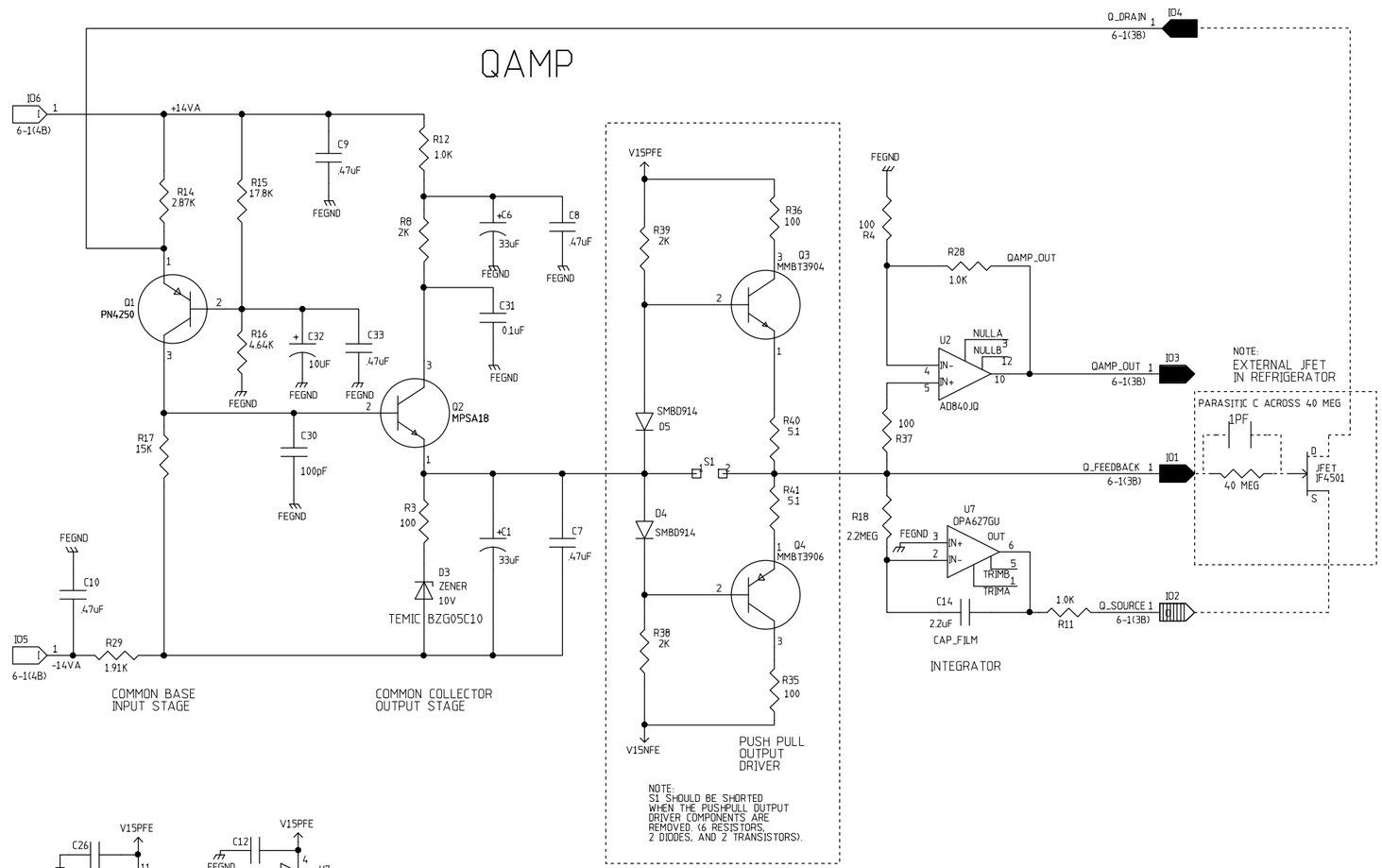

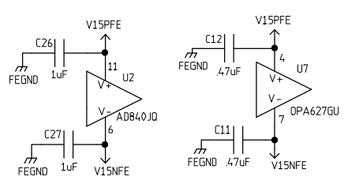

	NAME	DATE
ORIGINATOR	MERLE HALDEMAN	11/16/98
DRAWN	BRUCE MERKEL	11/16/98
CHECKED	TOM CRENNA	1/6/99
APPROVED		

FERMILAB PPD/EET/ES CDMS (E-891)
ZIP MODULE
DISCRETE Q AMPLIFIER

SIZE	FSCM NO.	DWG. NO.	REV
C			
SCALE		SHEET 6-2	

REVISIONS			
REV	DESCRIPTION	DATE	APPROVED

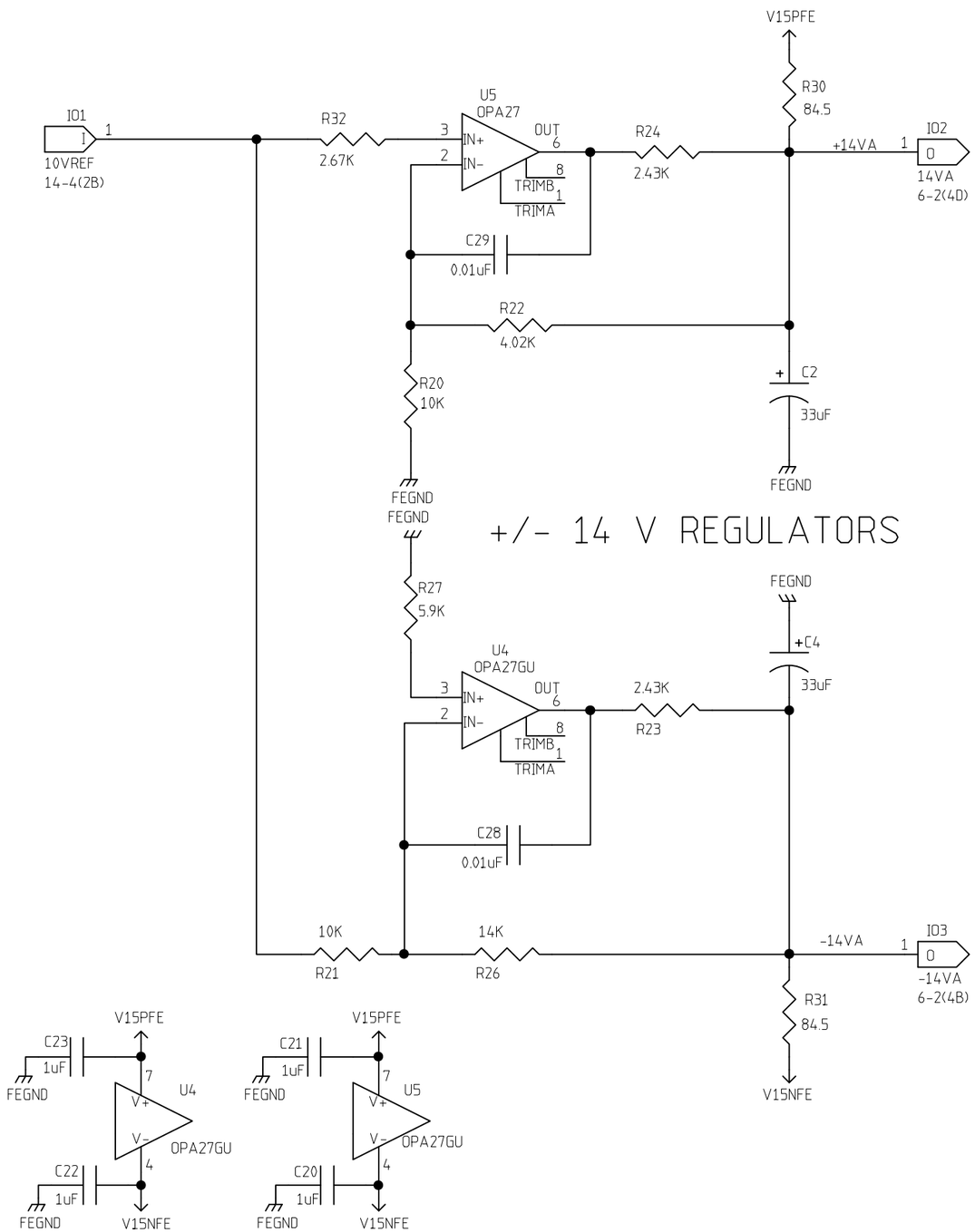

	NAME	DATE
ORIGINATOR	MERLE HALDEMAN	11/16/98
DRAWN	BRUCE MERKEL	11/16/98
CHECKED	TOM CRENNA	1/6/99
APPROVED		

FERMILAB PPD/ ETT/ ES CDMS (E-891)

ZIP MODULE

Q AMP 14V

SIZE	FSCM NO.	DWG. NO.	REV
B			
SCALE		SHEET 6-3	

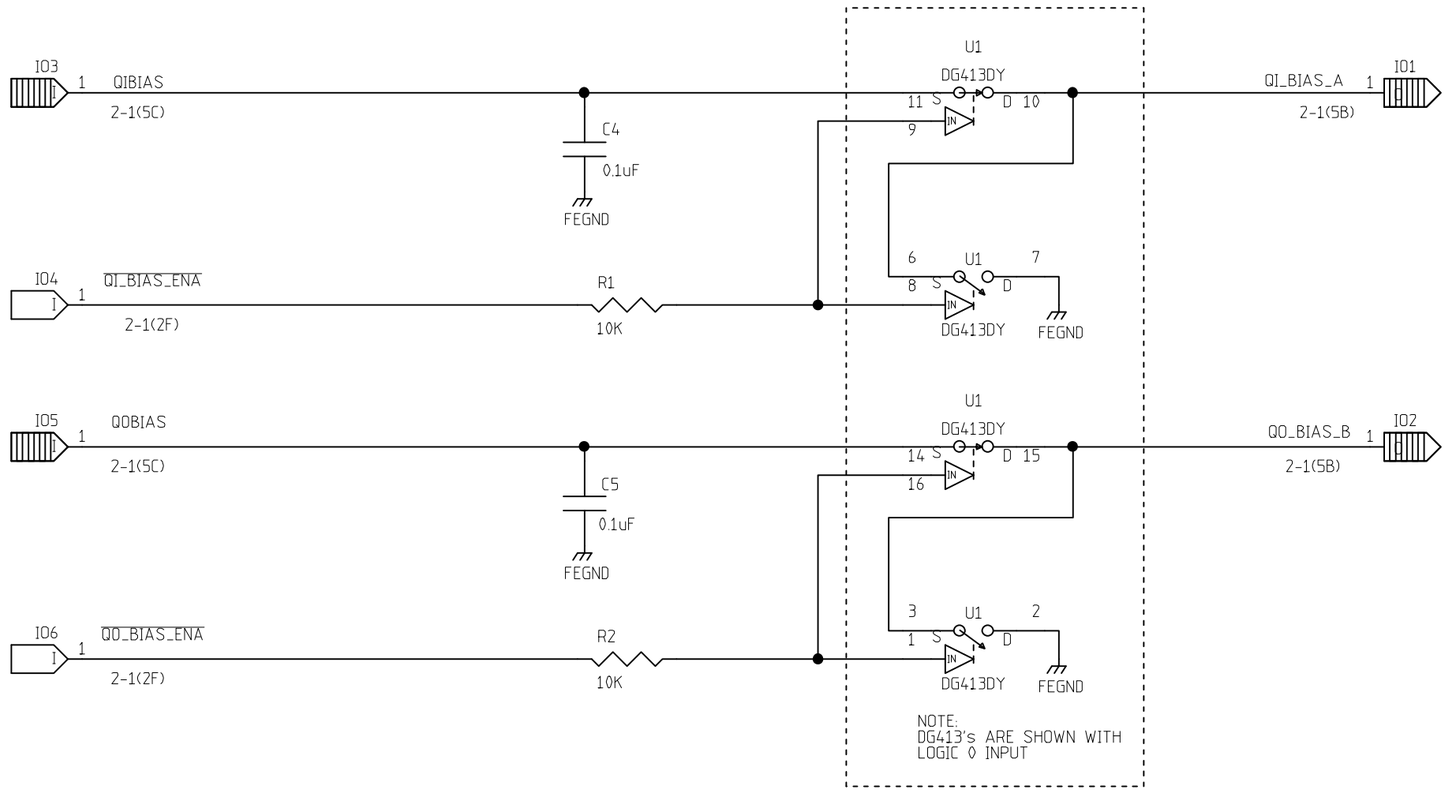

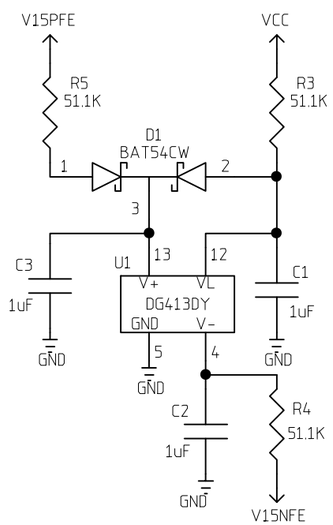

REVISIONS			
REV	DESCRIPTION	DATE	APPROVED

	NAME	DATE
ORIGINATOR	MERLE HALDEMAN	11/16/98
DRAWN	BRUCE MERKEL	12/08/98
CHECKED	TOM CRENNA	1/6/99
APPROVED		

FERMILAB PPD/ETT/ES CDMS (E-891)
ZIP MODULE
QBIAS FRONT END

SIZE	FSCM NO.	DWG. NO.	REV
B			
SCALE		SHEET 7-1	

REVISIONS			
REV	DESCRIPTION	DATE	APPROVED

LED CURRENT CONTROL LED CURRENT SOURCE

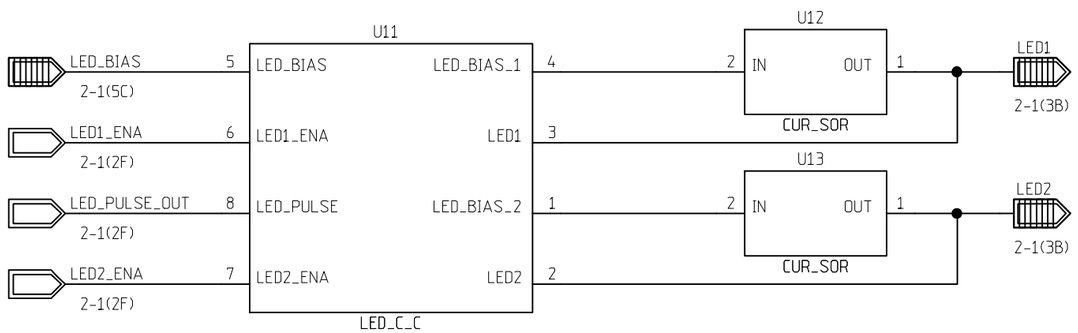

	NAME	DATE
ORIGINATOR	MERLE HALDEMAN	11/16/98
DRAWN	BRUCE MERKEL	11/16/98
CHECKED	TOM CRENNA	1/6/99
APPROVED		

FERMILAB PPD/ETT/ES CDMS (E-891)
ZIP MODULE
LED BLOCK DIAGRAM

SIZE	FSCM NO.	DWG. NO.	REV
B			
SCALE		SHEET 8-1	

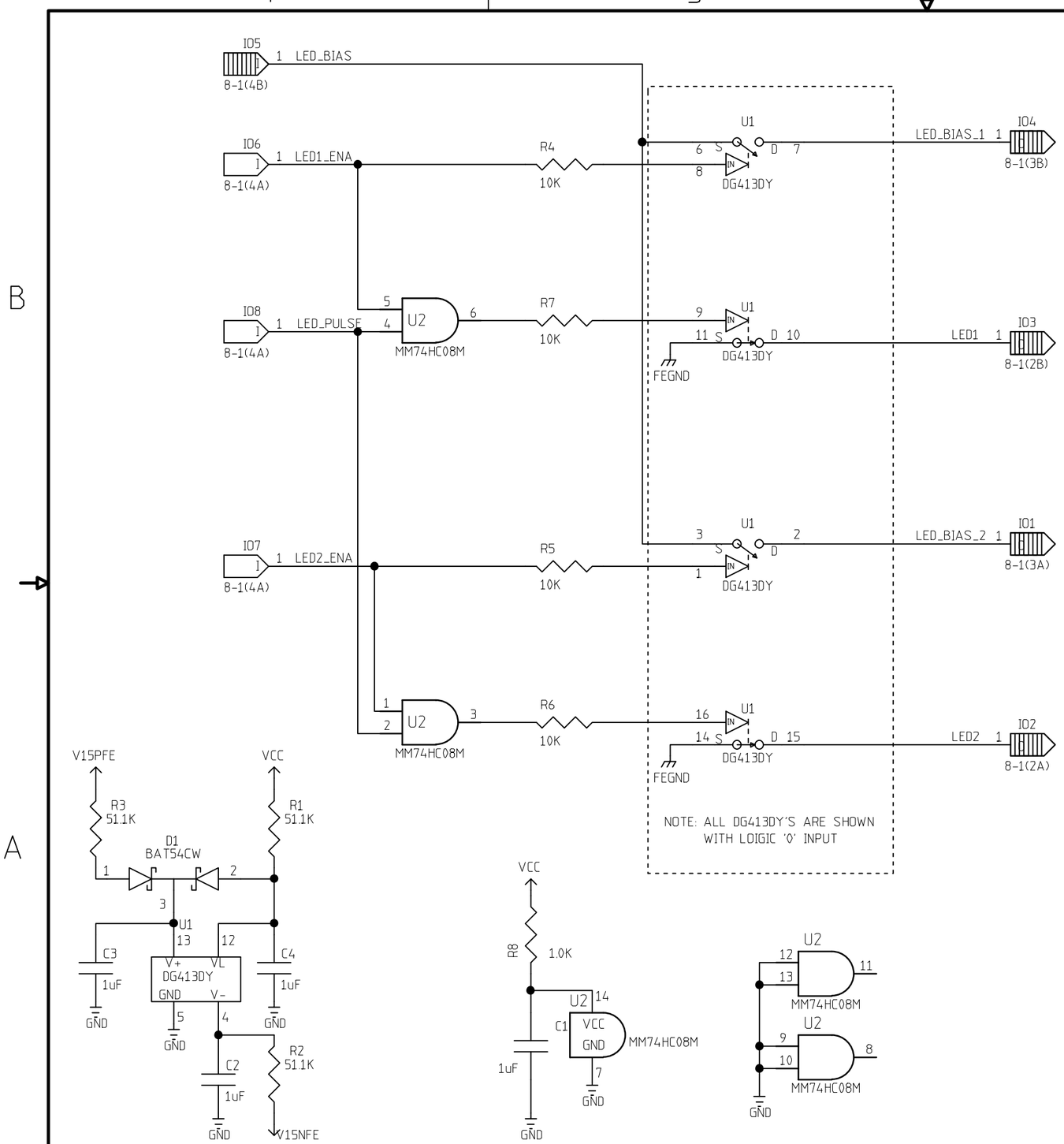

REVISIONS			
REV	DESCRIPTION	DATE	APPROVED

	NAME	DATE
ORIGINATOR	MERLE HALDEMAN	11/16/98
DRAWN	BRUCE MERKEL	12/17/98
CHECKED	TOM CRENNA	1/6/99
APPROVED		

FERMILAB PPD/ ETT/ ES CDMS(E-891)
ZIP MODULE
LED CURRENT CONTROL

SIZE	FSCM NO.	DWG. NO.	REV
B			
SCALE		SHEET 8-4	

REVISIONS			
REV	DESCRIPTION	DATE	APPROVED

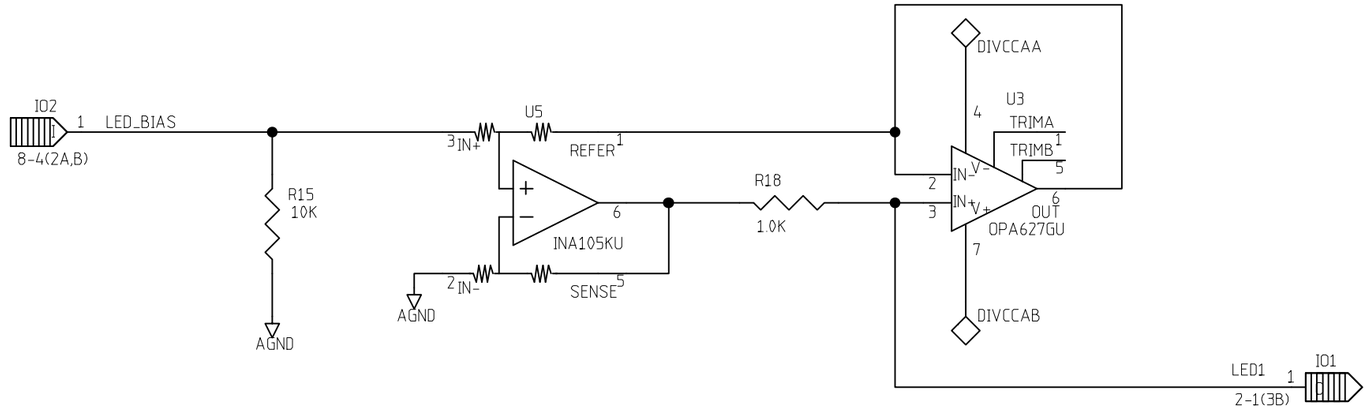

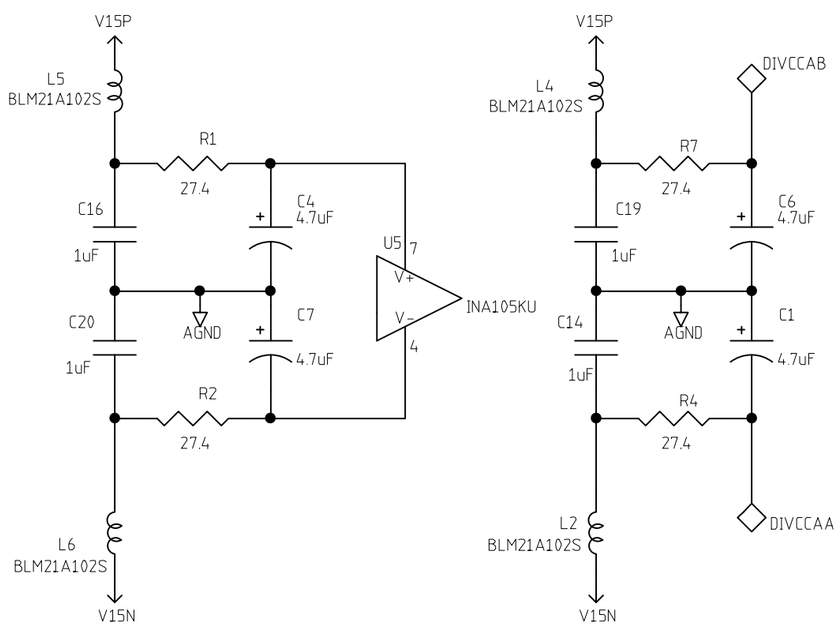

	NAME	DATE
ORIGINATOR	MERLE HALDEMAN	11/16/98
DRAWN	BRUCE MERKEL	12/09/98
CHECKED	TOM CRENNA	1/6/99
APPROVED		

FERMILAB PPD/ ETT/ ES CDMS(E-891)
ZIP MODULE
LED CURRENT SOURCE

SIZE	FSCM NO.	DWG. NO.	REV
B			
SCALE		SHEET 8-5	

REVISIONS			
REV	DESCRIPTION	DATE	APPROVED

MONENTARY PUSH BUTTON
FRONT PANEL MOUNT SWITCH

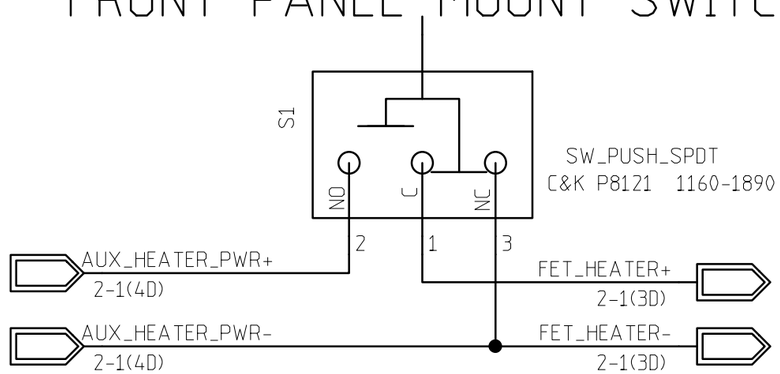

FETTEMP

	NAME	DATE
ORIGINATOR	MERLE HALDEMAN	11/16/98
DRAWN	BRUCE MERKEL	11/16/98
CHECKED	TOM CRENNA	1/6/99
APPROVED		

FERMILAB PPD/EET/ES CDMS (E-891)
ZIP MODULE
FETTEMP

SIZE	FSCM NO.	DWG. NO.	REV
A			

SCALE		SHEET 9-1

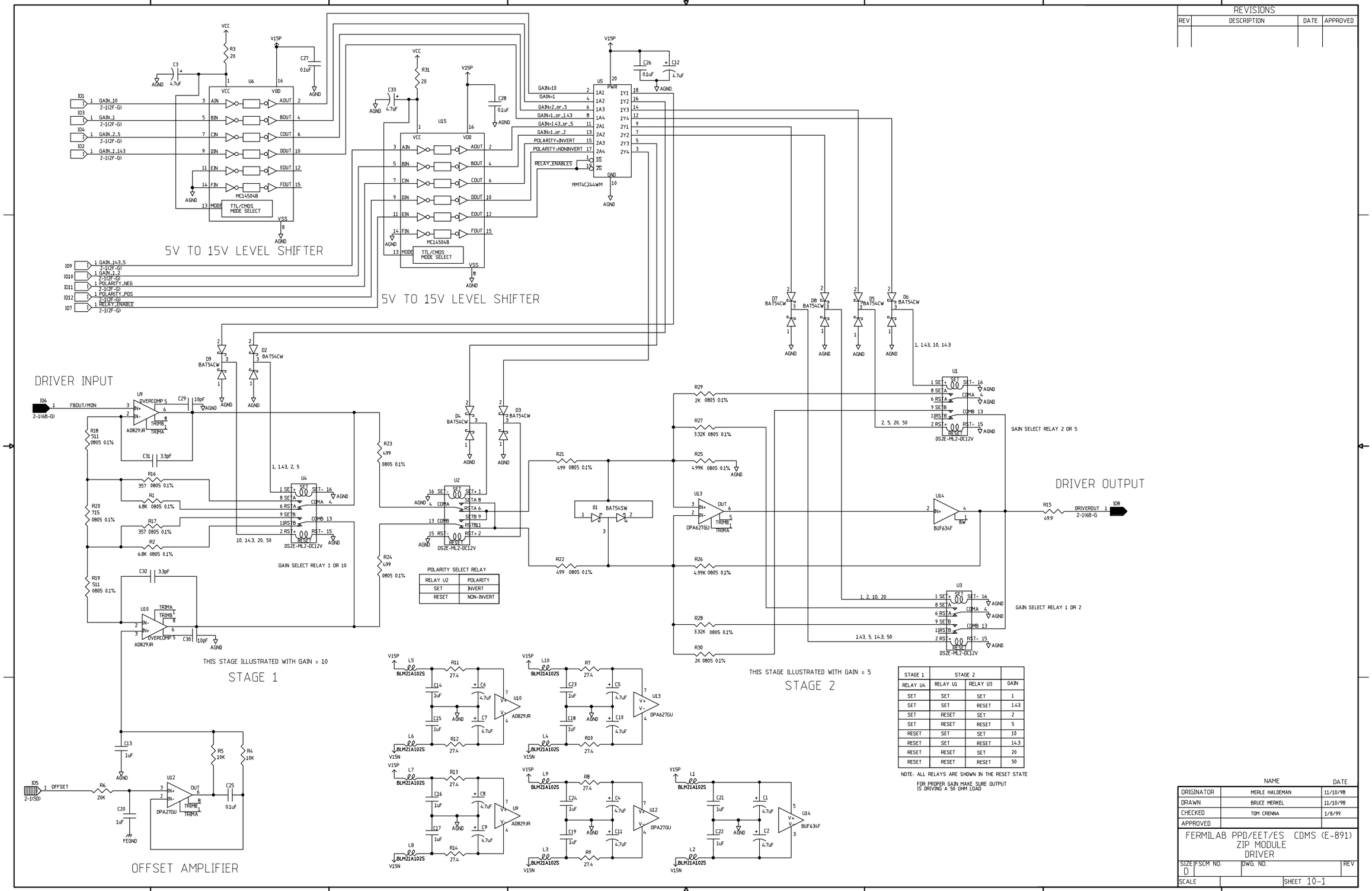
5V TO 15V LEVEL SHIFTER
5V TO 15V LEVEL SHIFTER
DRIVER INPUT
DRIVER OUTPUT
STAGE 1
THIS STAGE ILLUSTRATED WITH GAIN = 10
STAGE 2
THIS STAGE ILLUSTRATED WITH GAIN = 5
OFFSET AMPLIFIER
GAIN SELECT RELAY 2 OR 5
GAIN SELECT RELAY 1 OR 10
GAIN SELECT RELAY 1 OR 2
POLARITY SELECT RELAY
RELAY U2 | POLARITY
SET | INVERT
RESET | NON-INVERT
STAGE 1 | STAGE 2 | |
RELAY U4 | RELAY U1 | RELAY U3 | GAIN
SET | SET | SET | 1
SET | SET | RESET | 1.43
SET | RESET | SET | 2
SET | RESET | RESET | 5
RESET | SET | SET | 10
RESET | SET | RESET | 14.3
RESET | RESET | SET | 20
RESET | RESET | RESET | 50
NOTE: ALL RELAYS ARE SHOWN IN THE RESET STATE
FOR PROPER GAIN MAKE SURE OUTPUT IS DRIVING A 50 OHM LOAD
REVISIONS
REV | DESCRIPTION | DATE | APPROVED
NAME | DATE
ORIGINATOR | MERLE HALDEMAN | 11/10/98
DRAWN | BRUCE MERKEL | 11/10/98
CHECKED | TOM CRENNA | 1/8/99
APPROVED
FERMILAB PPD/EET/ES CDMS (E-891)
ZIP MODULE
DRIVER
SIZE D | FSCM NO. | DWG. NO. | REV
SCALE | SHEET 10-1

REVISIONS			
REV	DESCRIPTION	DATE	APPROVED

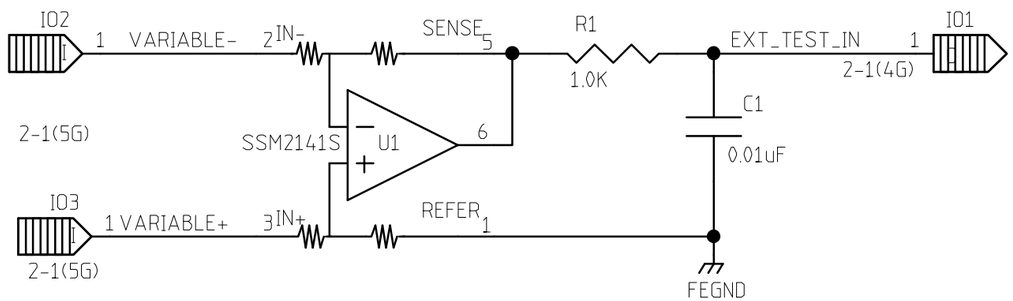

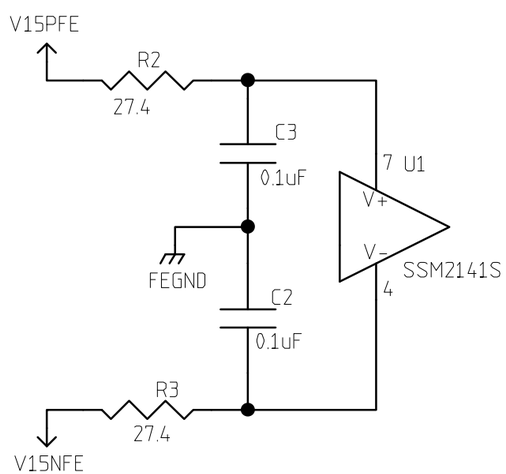

	NAME	DATE
ORIGINATOR	MERLE HALDEMAN	11/16/98
DRAWN	BRUCE MERKEL	11/16/98
CHECKED	TOM CRENNA	1/8/99
APPROVED		

FERMILAB PPD/ETT/ES CDMS (E-891)
ZIP MODULE
EXTERNAL TEST RECEIVER

SIZE	FSCM NO.	DWG. NO.	REV
A			

SCALE | SHEET 11-1

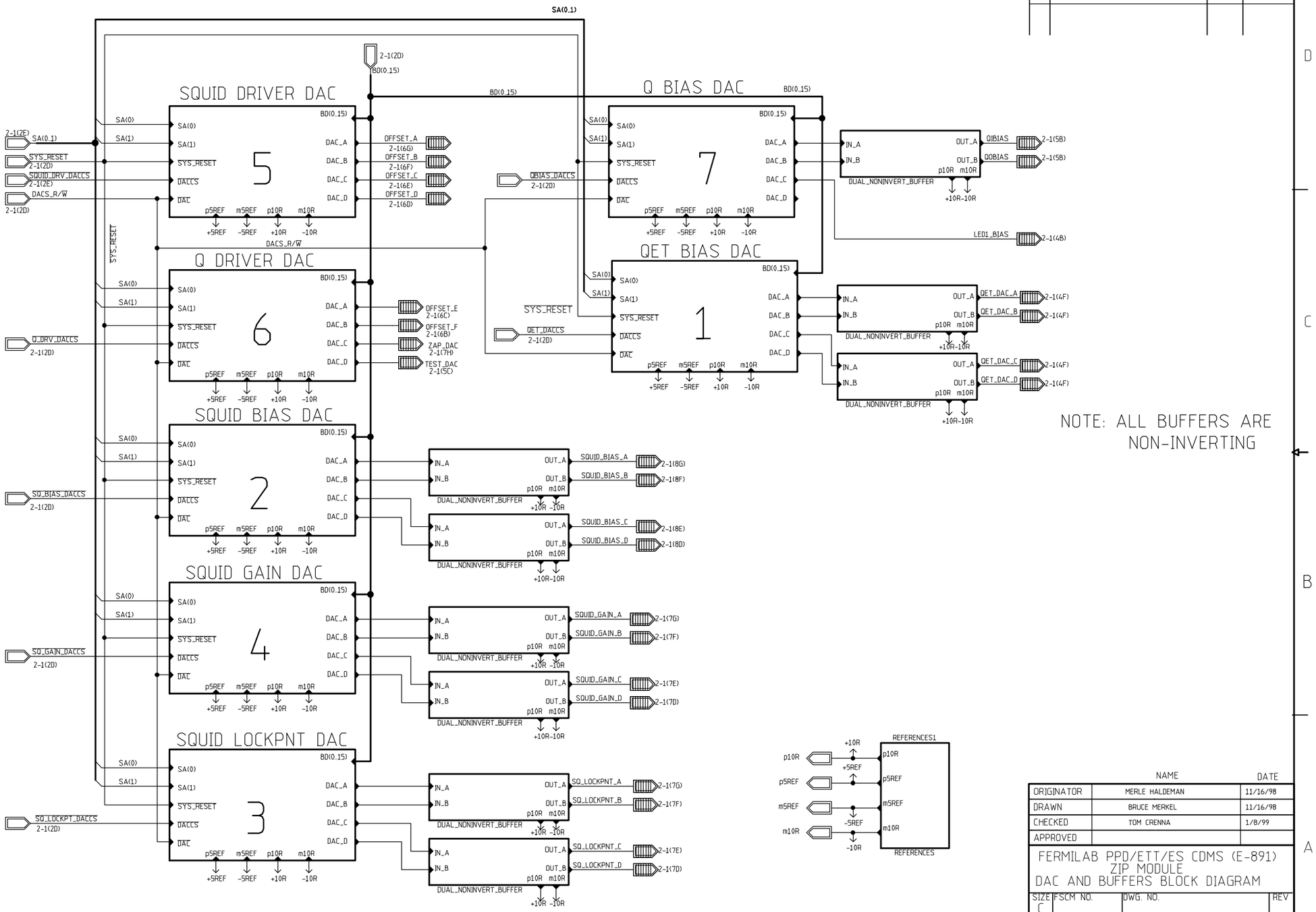

REVISIONS			
REV	DESCRIPTION	DATE	APPROVED

	NAME	DATE
ORIGINATOR	MERLE HALDEMAN	11/16/98
DRAWN	BRUCE MERKEL	11/16/98
CHECKED	TOM CRENNA	1/8/99
APPROVED		

FERMILAB PPD/ETT/ES CDMS (E-891)
ZIP MODULE
DAC AND BUFFERS BLOCK DIAGRAM

SIZE	FSCM NO.	DWG. NO.	REV
C			
SCALE		SHEET 12-1	

REVISIONS			
REV	DESCRIPTION	DATE	APPROVED
0	UNDER DEVELOPMENT	1-19-99	

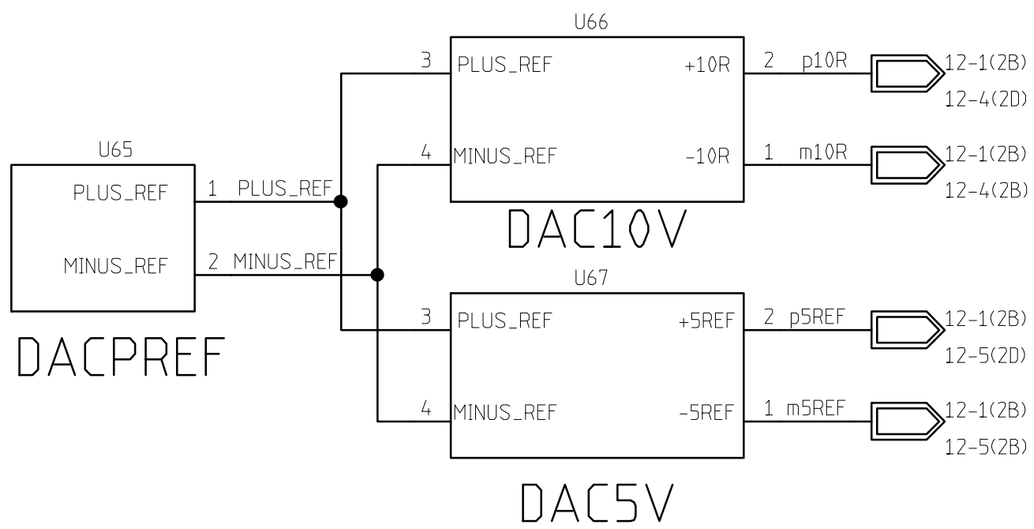

	NAME	DATE
ORIGINATOR	MERLE HALDEMAN	11/16/98
DRAWN	BRUCE MERKEL	11/16/98
CHECKED	TOM CRENNA	1/8/99
APPROVED		

FERMILAB PPD/ ETT/ ES CDMS(E-891)
ZIP MODULE
DAC REFERENCES

SIZE	FSCM NO.	DWG. NO.	REV
A			

SCALE | SHEET 12-2

REVISIONS			
REV	DESCRIPTION	DATE	APPROVED

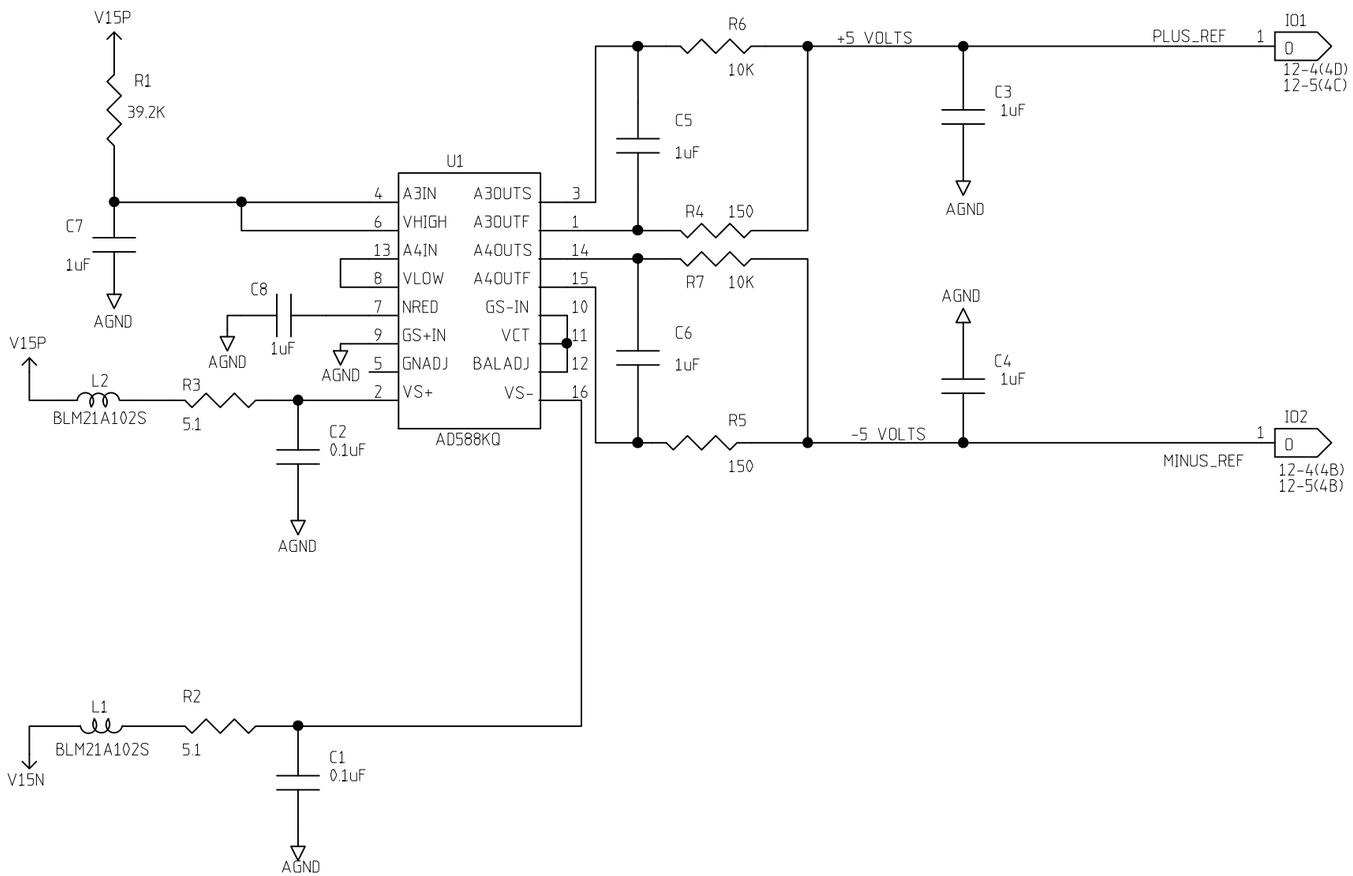

	NAME	DATE
ORIGINATOR	MERLE HALDEMAN	12/01/98
DRAWN	BRUCE MERKEL	12/01/98
CHECKED	TOM CRENNA	1/8/99
APPROVED		

FERMILAB PPD/ ETT/ ES CDMS(E-891)
ZIP MODULE
DAC PRECISION REFERENCE

SIZE	FSCM NO.	DWG. NO.	REV
B			

SCALE | SHEET 12-3

REVISIONS			
REV	DESCRIPTION	DATE	APPROVED

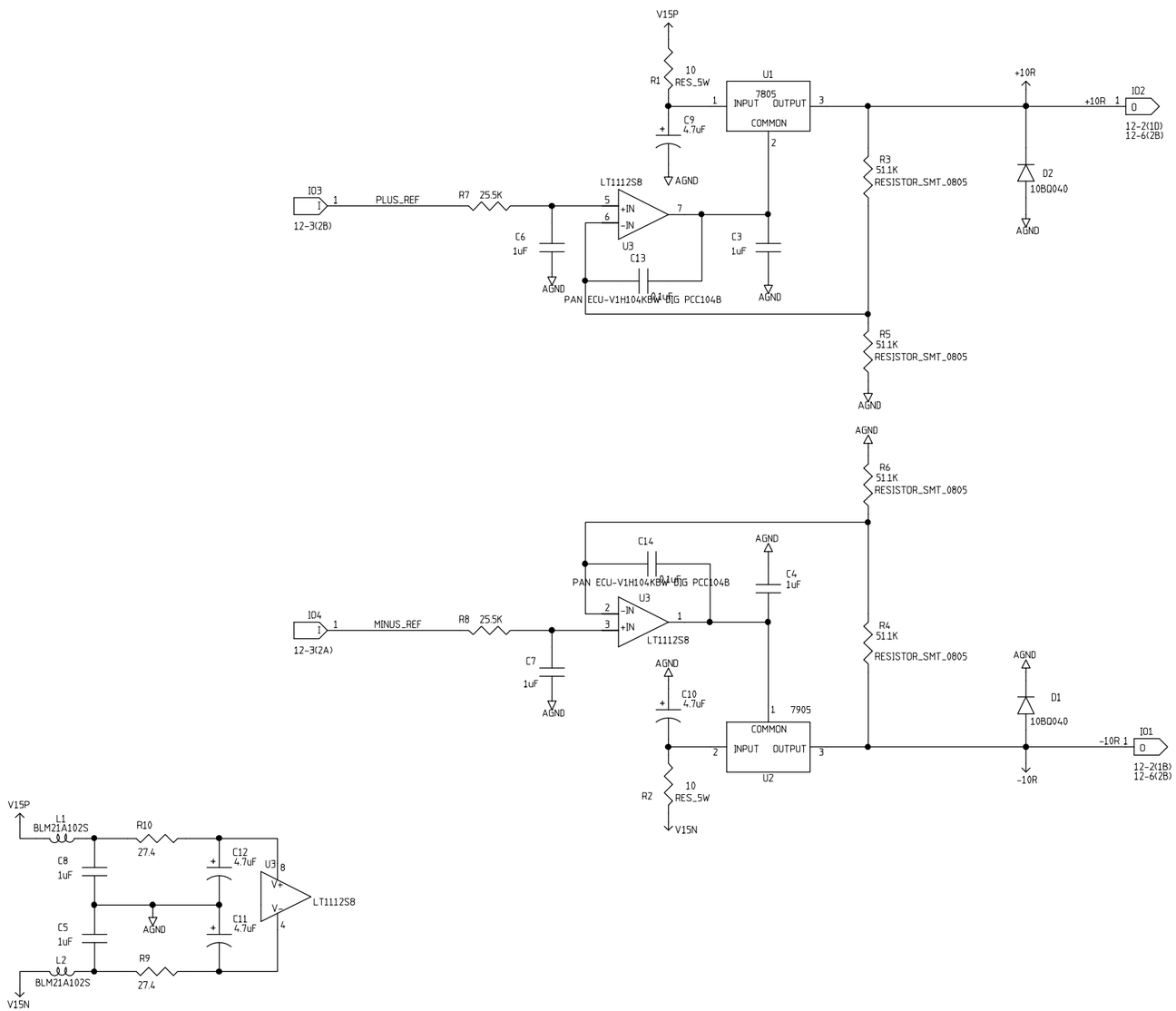

	NAME	DATE
ORIGINATOR	MERLE HALDEMAN	12/01/98
DRAWN	BRUCE MERKEL	12/01/98
CHECKED	TOM CRENNA	1/8/99
APPROVED		

FERMILAB PPD/ ETT/ ES CDMS(E-891)
ZIP MODULE
DAC +/- 10 VOLT REFERENCES

SIZE	FSCM NO.	DWG. NO.	REV
C			
SCALE		SHEET 12-4	

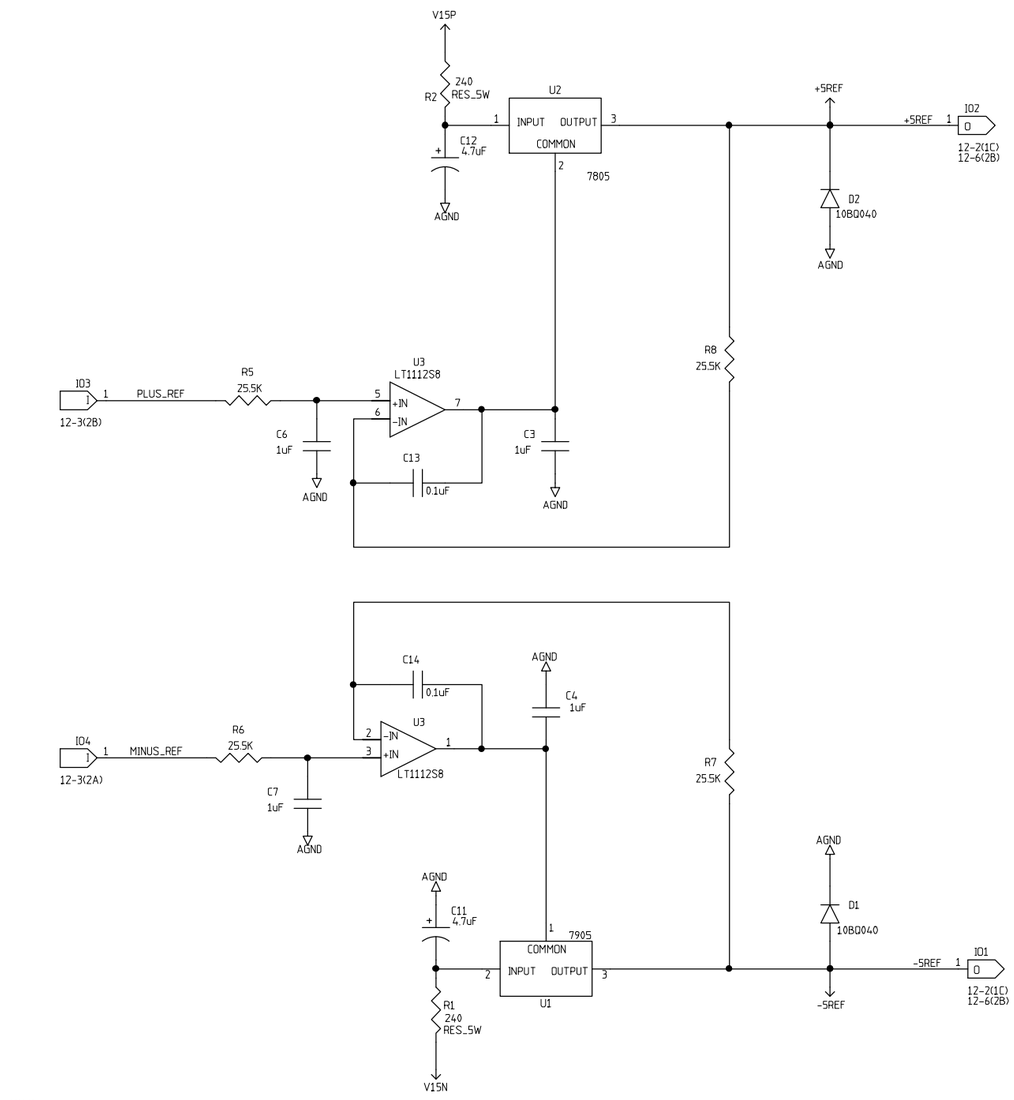

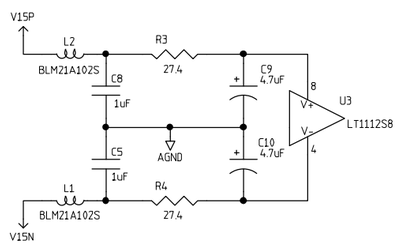

REVISIONS			
REV	DESCRIPTION	DATE	APPROVED

	NAME	DATE
ORIGINATOR	MERLE HALDEMAN	12/01/98
DRAWN	BRUCE MERKEL	12/01/98
CHECKED	TOM CRENNA	1/8/99
APPROVED		

FERMILAB PPD/ ETT/ ES CDMS(E-891)
ZIP MODULE
DAC +/-5V REFERENCES

SIZE	FSCM NO.	DWG. NO.	REV
C			
SCALE		SHEET 12-5	

REVISIONS			
REV	DESCRIPTION	DATE	APPROVED
0	UNDER DEVELOPMENT	1-19-99	

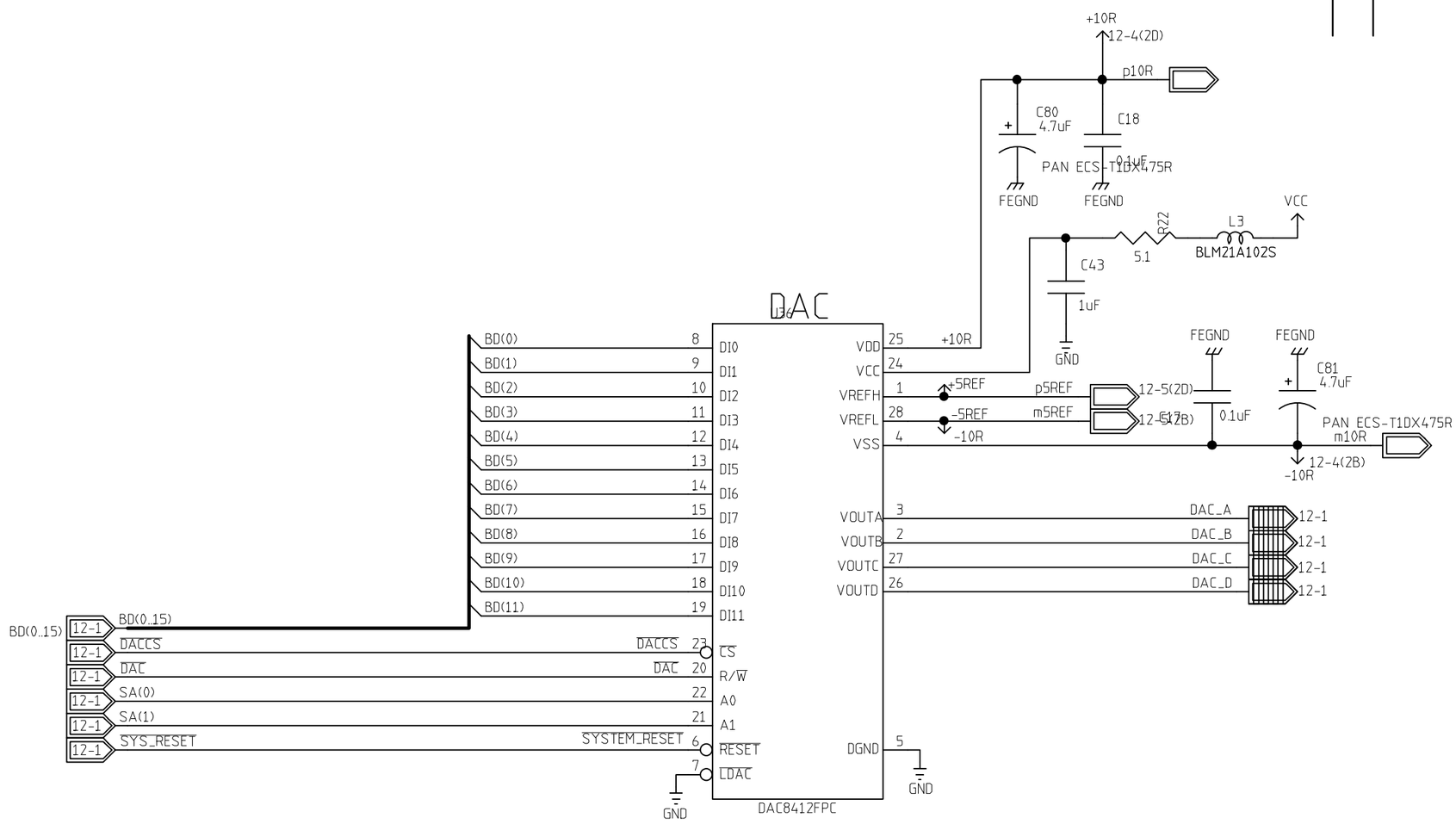

	NAME	DATE
ORIGINATOR	MERLE HALDEMAN	11/17/98
DRAWN	BRUCE MERKEL	11/17/98
CHECKED	TOM CRENNA	1/8/99
APPROVED		

FERMILAB PPD/ ETT/ ES CDMS(E-891)
ZIP MODULE
DAC'S_1_TO_7

SIZE	FSCM NO.	DWG. NO.	REV
B			

SCALE | SHEET 12-6

REVISIONS			
REV	DESCRIPTION	DATE	APPROVED
0	UNDER DEVELOPMENT	1-19-99	

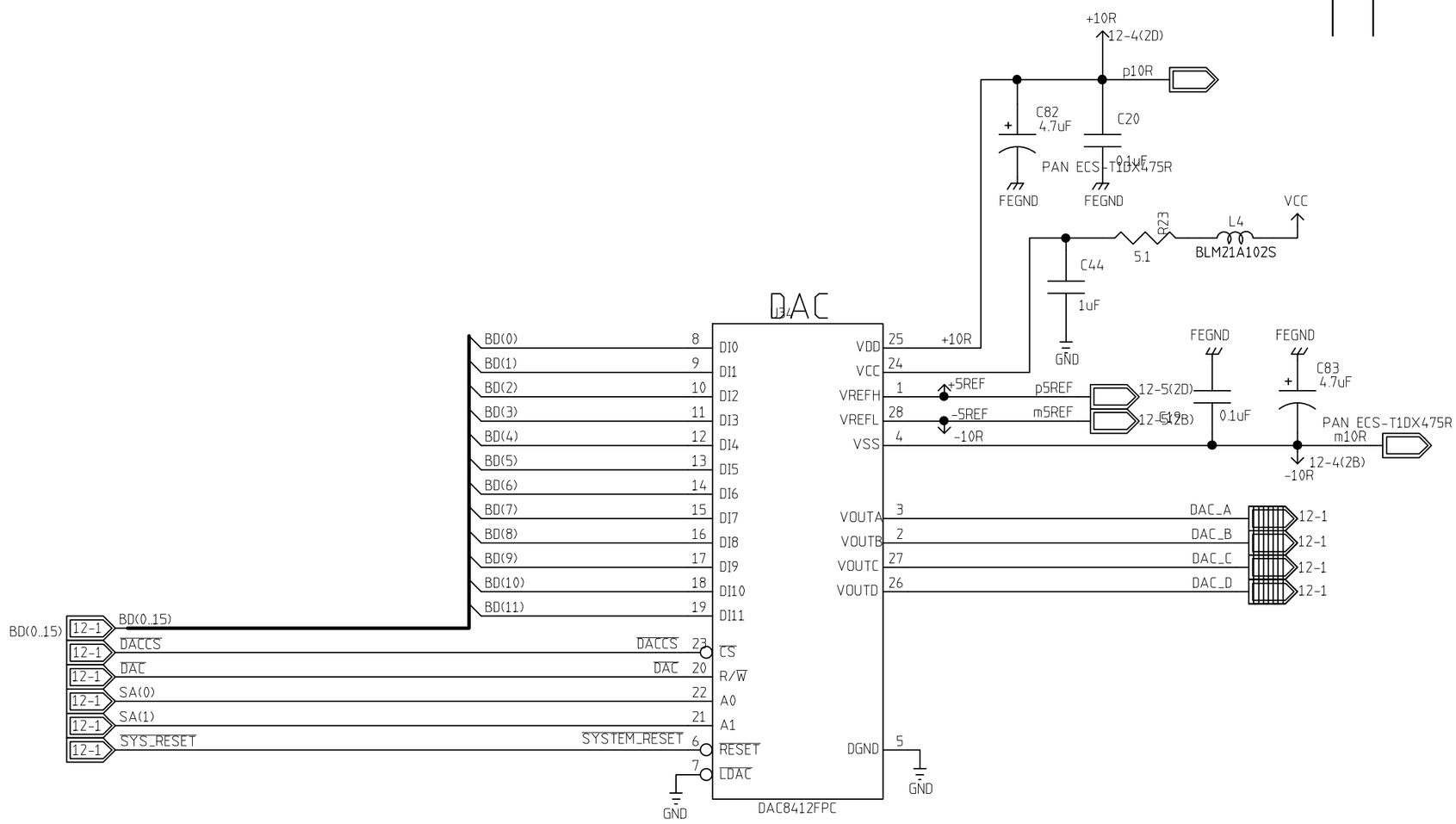

	NAME	DATE
ORIGINATOR	MERLE HALDEMAN	11/17/98
DRAWN	BRUCE MERKEL	11/17/98
CHECKED	TOM CRENNA	1/8/99
APPROVED		

FERMILAB PPD/ ETT/ ES CDMS(E-891)
ZIP MODULE
DAC'S_1_TO_7

SIZE	FSCM NO.	DWG. NO.	REV
B			

SCALE | SHEET 12-6

REVISIONS			
REV	DESCRIPTION	DATE	APPROVED
0	UNDER DEVELOPMENT	1-19-99	

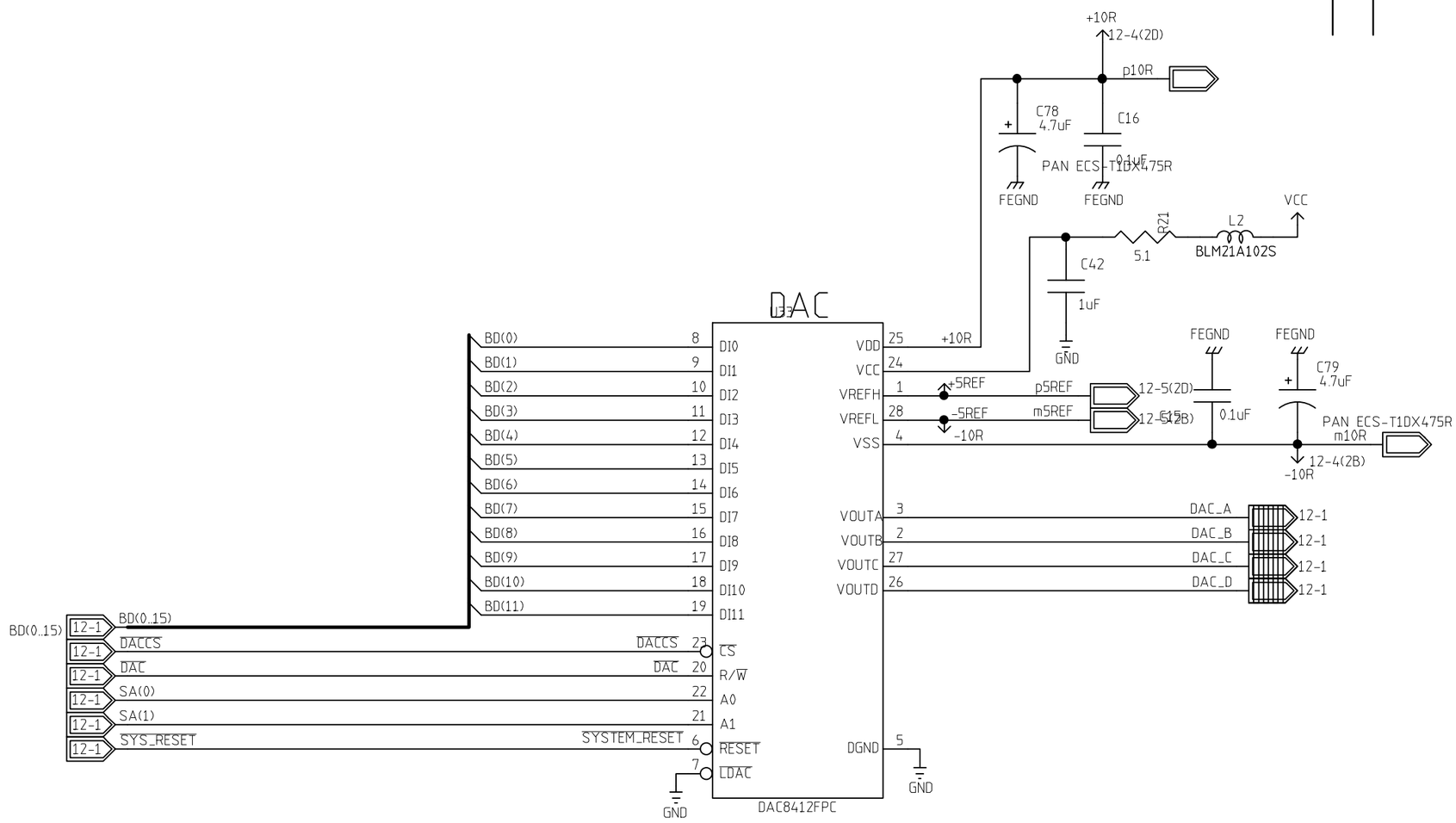

	NAME	DATE
ORIGINATOR	MERLE HALDEMAN	11/17/98
DRAWN	BRUCE MERKEL	11/17/98
CHECKED	TOM CRENNA	1/8/99
APPROVED		

FERMILAB PPD/ ETT/ ES CDMS(E-891)
ZIP MODULE
DAC'S_1_TO_7

SIZE	FSCM NO.	DWG. NO.	REV
B			

SCALE | SHEET 12-6

REVISIONS			
REV	DESCRIPTION	DATE	APPROVED
0	UNDER DEVELOPMENT	1-19-99	

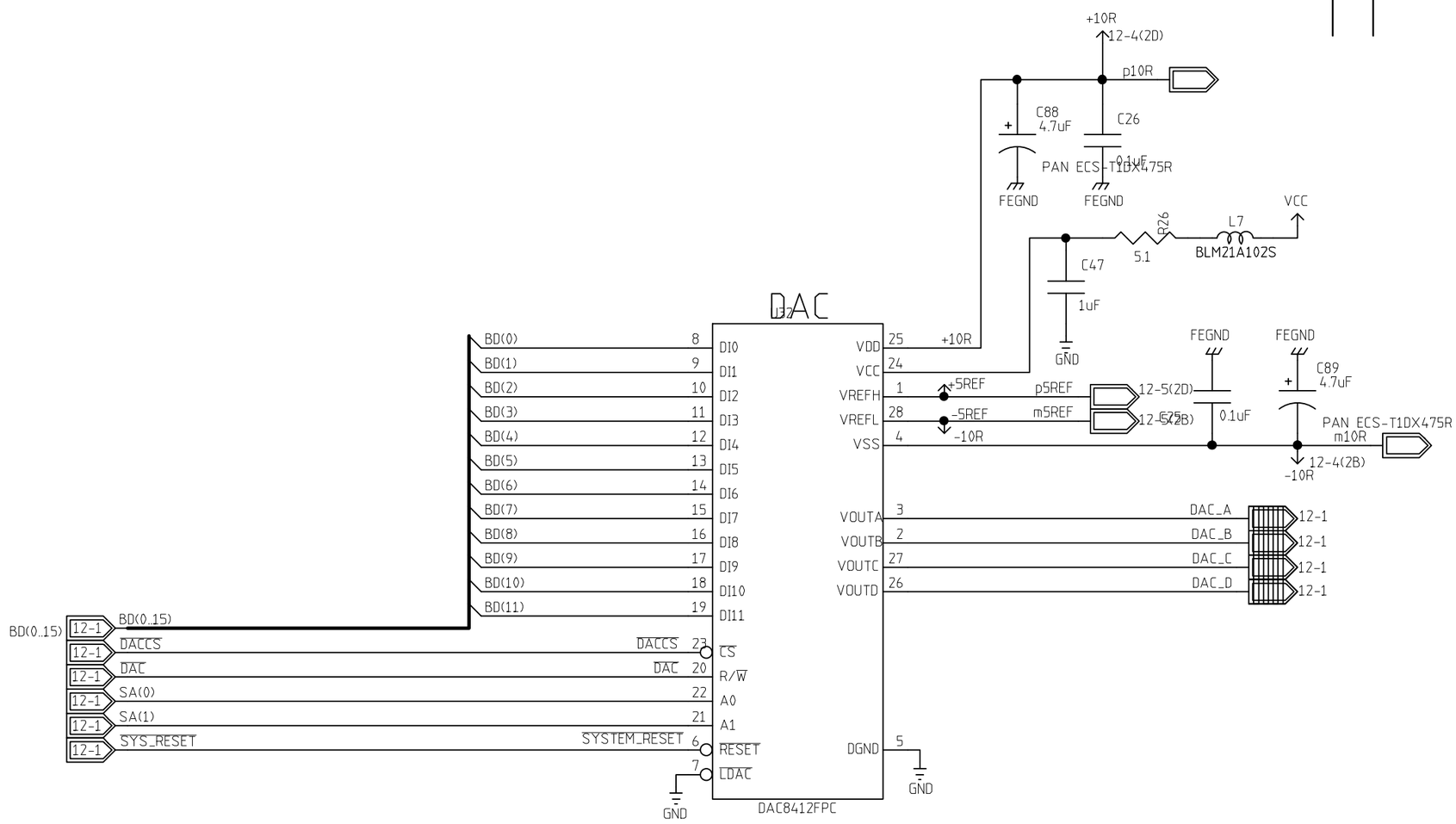

	NAME	DATE
ORIGINATOR	MERLE HALDEMAN	11/17/98
DRAWN	BRUCE MERKEL	11/17/98
CHECKED	TOM CRENNA	1/8/99
APPROVED		

FERMILAB PPD/ ETT/ ES CDMS(E-891)
ZIP MODULE
DAC'S_1_TO_7

SIZE	FSCM NO.	DWG. NO.	REV
B			

SCALE | SHEET 12-6

REVISIONS			
REV	DESCRIPTION	DATE	APPROVED
0	UNDER DEVELOPMENT	1-19-99	

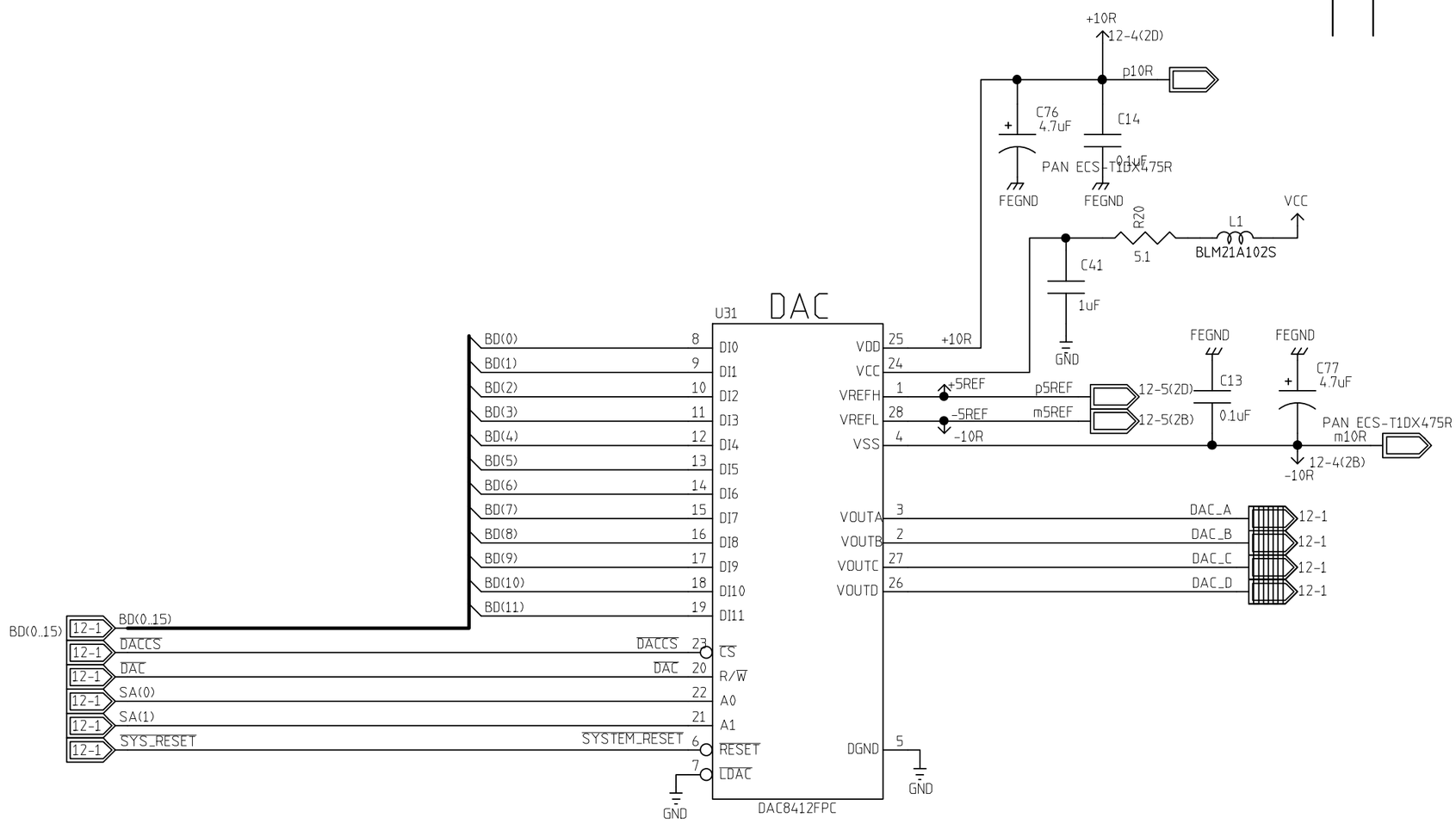

	NAME	DATE
ORIGINATOR	MERLE HALDEMAN	11/17/98
DRAWN	BRUCE MERKEL	11/17/98
CHECKED	TOM CRENNA	1/8/99
APPROVED		

FERMILAB PPD/ ETT/ ES CDMS(E-891)
ZIP MODULE
DAC'S_1_TO_7

SIZE	FSCM NO.	DWG. NO.	REV
B			

SCALE | SHEET 12-6

REVISIONS			
REV	DESCRIPTION	DATE	APPROVED
0	UNDER DEVELOPMENT	1-19-99	

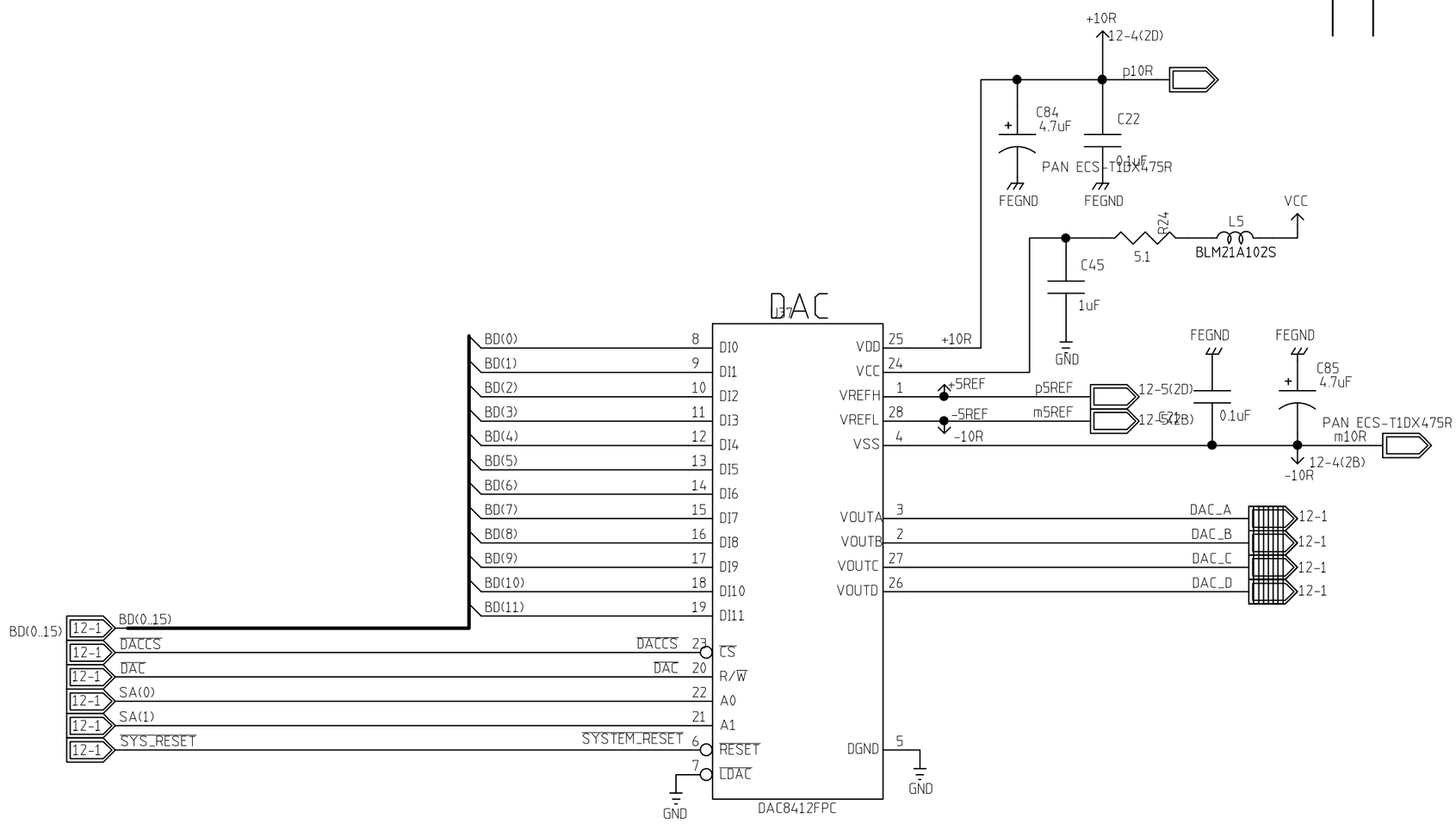

	NAME	DATE
ORIGINATOR	MERLE HALDEMAN	11/17/98
DRAWN	BRUCE MERKEL	11/17/98
CHECKED	TOM CRENNA	1/8/99
APPROVED		

FERMILAB PPD/ ETT/ ES CDMS(E-891)
ZIP MODULE
DAC'S_1_TO_7

SIZE	FSCM NO.	DWG. NO.	REV
B			

SCALE | SHEET 12-6

REVISIONS			
REV	DESCRIPTION	DATE	APPROVED
0	UNDER DEVELOPMENT	1-19-99	

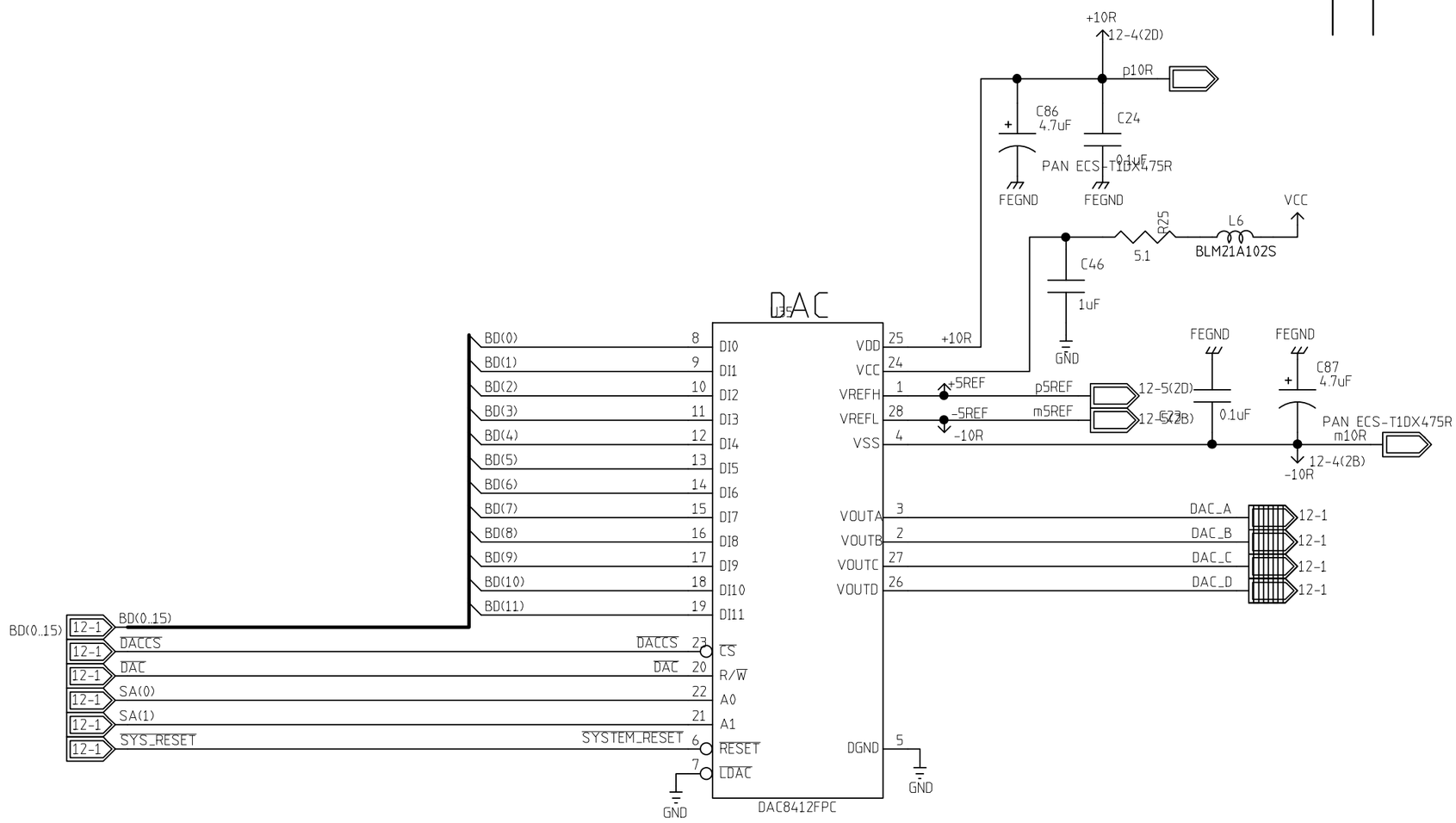

	NAME	DATE
ORIGINATOR	MERLE HALDEMAN	11/17/98
DRAWN	BRUCE MERKEL	11/17/98
CHECKED	TOM CRENNA	1/8/99
APPROVED		

FERMILAB PPD/ ETT/ ES CDMS(E-891)
ZIP MODULE
DAC'S_1_TO_7

SIZE	FSCM NO.	DWG. NO.	REV
B			

SCALE | SHEET 12-6

REVISIONS			
REV	DESCRIPTION	DATE	APPROVED

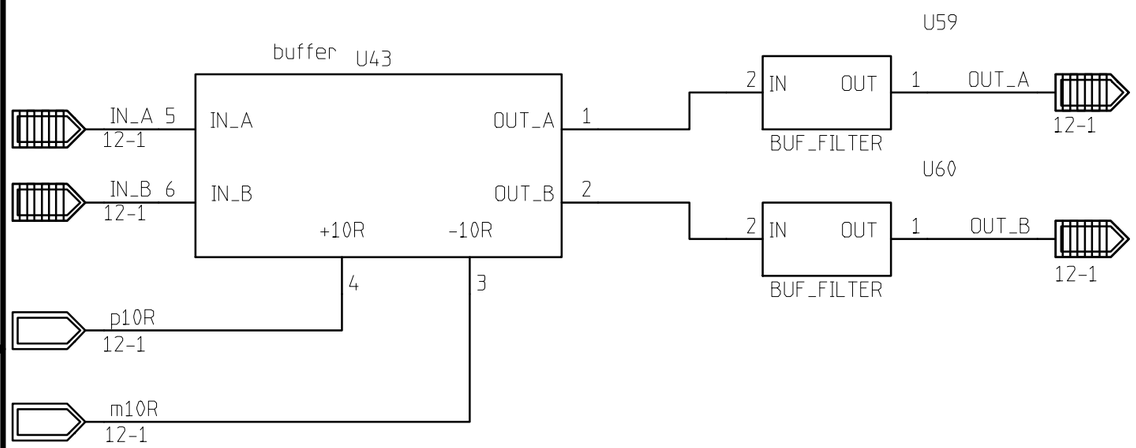

	NAME	DATE
ORIGINATOR	MERLE HALDEMAN	11/17/98
DRAWN	BRUCE MERKEL	12/10/98
CHECKED	TOM CRENNA	1/8/99
APPROVED		

FERMILAB PPD/ETT/ES CDMS (E-891)
ZIP MODULE
DUAL NON_INVERTING BUFFER BLOCK

SIZE	FSCM NO.	DWG. NO.	REV
A			

SCALE		SHEET 12-7

REVISIONS			
REV	DESCRIPTION	DATE	APPROVED

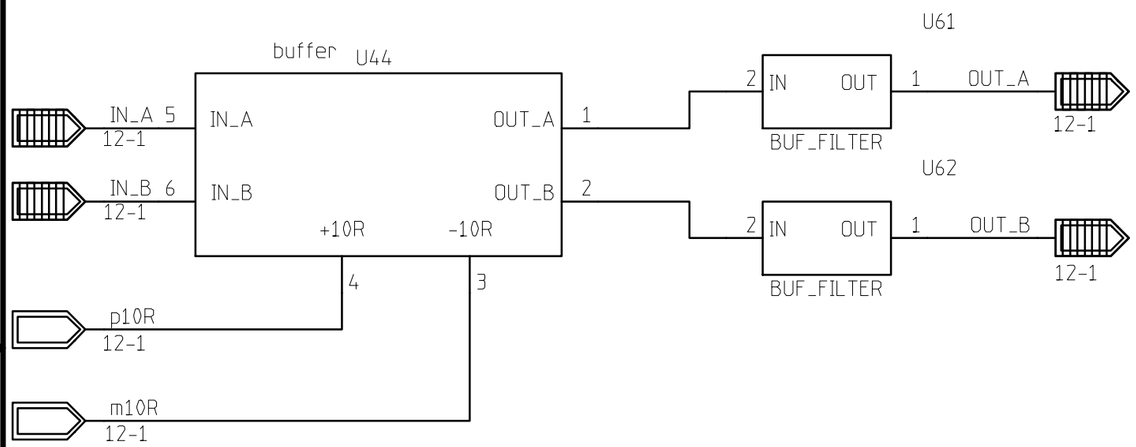

	NAME	DATE
ORIGINATOR	MERLE HALDEMAN	11/17/98
DRAWN	BRUCE MERKEL	12/10/98
CHECKED	TOM CRENNA	1/8/99
APPROVED		

FERMILAB PPD/ETT/ES CDMS (E-891)
ZIP MODULE
DUAL NON_INVERTING BUFFER BLOCK

SIZE	FSCM NO.	DWG. NO.	REV
A			

SCALE		SHEET 12-7

REVISIONS			
REV	DESCRIPTION	DATE	APPROVED

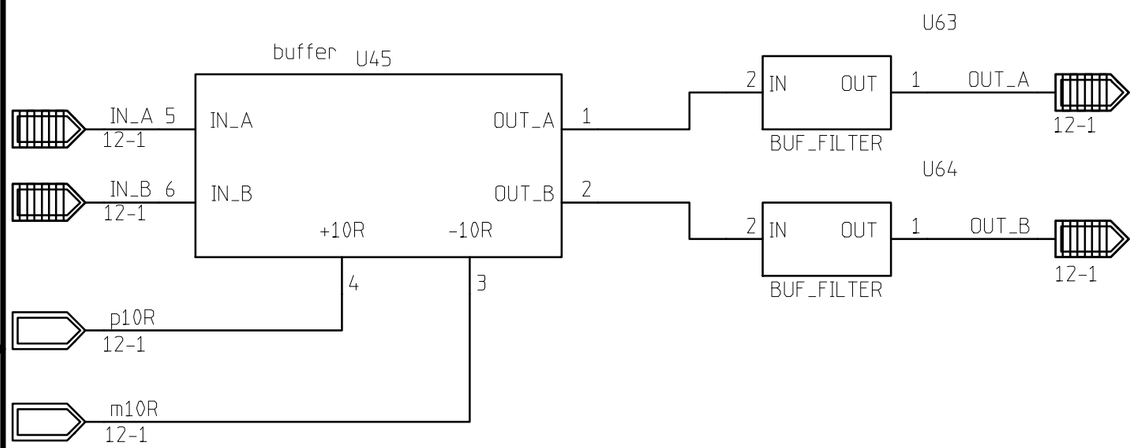

	NAME	DATE
ORIGINATOR	MERLE HALDEMAN	11/17/98
DRAWN	BRUCE MERKEL	12/10/98
CHECKED	TOM CRENNA	1/8/99
APPROVED		

FERMILAB PPD/ETT/ES CDMS (E-891)
ZIP MODULE
DUAL NON_INVERTING BUFFER BLOCK

SIZE	FSCM NO.	DWG. NO.	REV
A			

SCALE		SHEET 12-7

REVISIONS			
REV	DESCRIPTION	DATE	APPROVED

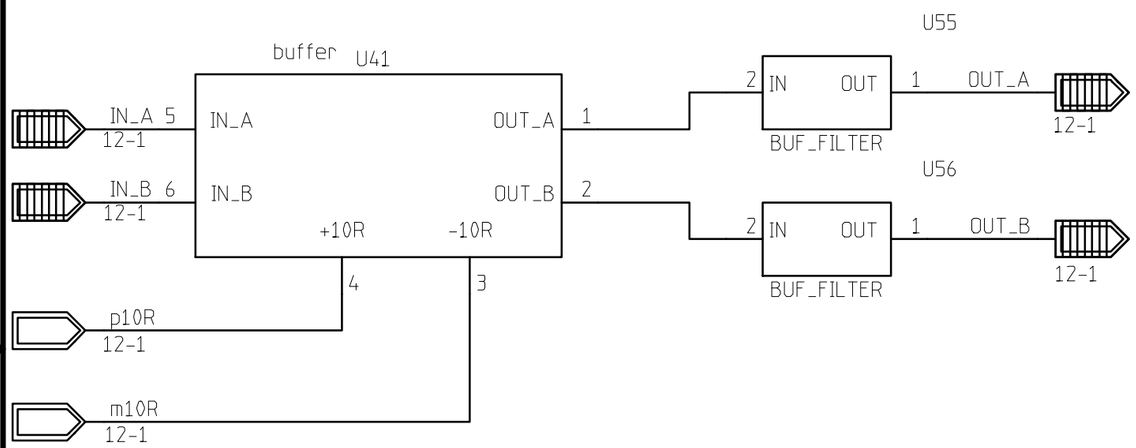

	NAME	DATE
ORIGINATOR	MERLE HALDEMAN	11/17/98
DRAWN	BRUCE MERKEL	12/10/98
CHECKED	TOM CRENNA	1/8/99
APPROVED		

FERMILAB PPD/ETT/ES CDMS (E-891)
ZIP MODULE
DUAL NON_INVERTING BUFFER BLOCK

SIZE	FSCM NO.	DWG. NO.	REV
A			

SCALE		SHEET 12-7

REVISIONS			
REV	DESCRIPTION	DATE	APPROVED

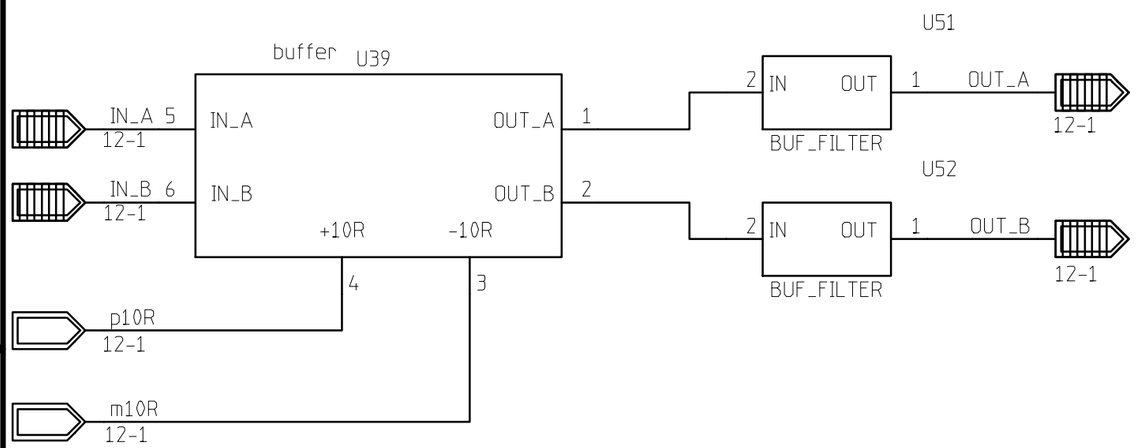

	NAME	DATE
ORIGINATOR	MERLE HALDEMAN	11/17/98
DRAWN	BRUCE MERKEL	12/10/98
CHECKED	TOM CRENNA	1/8/99
APPROVED		

FERMILAB PPD/ETT/ES CDMS (E-891)
ZIP MODULE
DUAL NON_INVERTING BUFFER BLOCK

SIZE	FSCM NO.	DWG. NO.	REV
A			

SCALE | SHEET 12-7

REVISIONS			
REV	DESCRIPTION	DATE	APPROVED

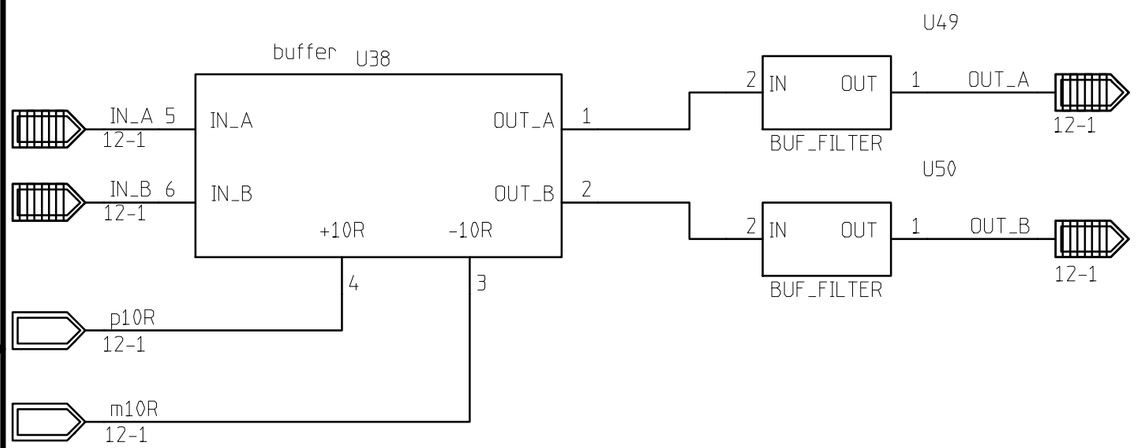

	NAME	DATE
ORIGINATOR	MERLE HALDEMAN	11/17/98
DRAWN	BRUCE MERKEL	12/10/98
CHECKED	TOM CRENNA	1/8/99
APPROVED		

FERMILAB PPD/ETT/ES CDMS (E-891)
ZIP MODULE
DUAL NON_INVERTING BUFFER BLOCK

SIZE	FSCM NO.	DWG. NO.	REV
A			

SCALE		SHEET 12-7

REVISIONS			
REV	DESCRIPTION	DATE	APPROVED

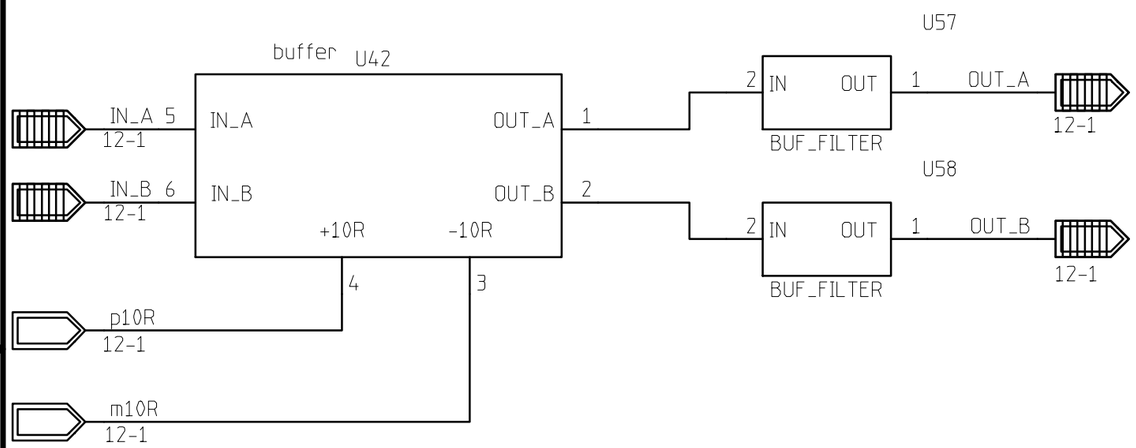

	NAME	DATE
ORIGINATOR	MERLE HALDEMAN	11/17/98
DRAWN	BRUCE MERKEL	12/10/98
CHECKED	TOM CRENNA	1/8/99
APPROVED		

FERMILAB PPD/ETT/ES CDMS (E-891)
ZIP MODULE
DUAL NON_INVERTING BUFFER BLOCK

SIZE	FSCM NO.	DWG. NO.	REV
A			

SCALE		SHEET 12-7

REVISIONS			
REV	DESCRIPTION	DATE	APPROVED

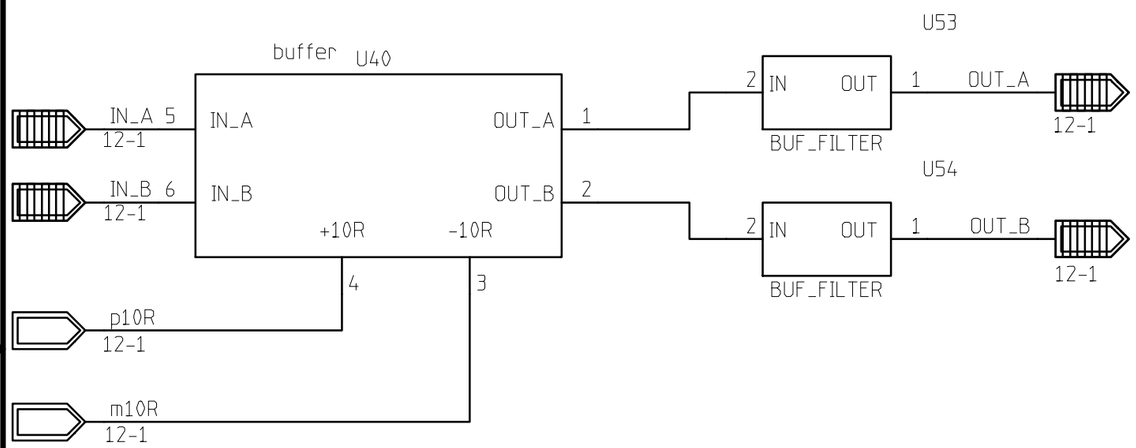

	NAME	DATE
ORIGINATOR	MERLE HALDEMAN	11/17/98
DRAWN	BRUCE MERKEL	12/10/98
CHECKED	TOM CRENNA	1/8/99
APPROVED		

FERMILAB PPD/ETT/ES CDMS (E-891)
ZIP MODULE
DUAL NON_INVERTING BUFFER BLOCK

SIZE	FSCM NO.	DWG. NO.	REV
A			

SCALE		SHEET 12-7

REVISIONS			
REV	DESCRIPTION	DATE	APPROVED

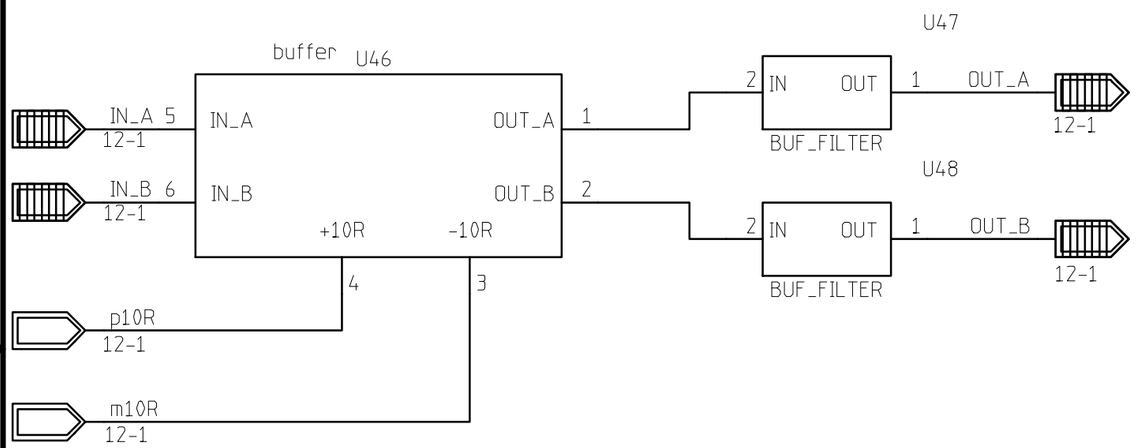

	NAME	DATE
ORIGINATOR	MERLE HALDEMAN	11/17/98
DRAWN	BRUCE MERKEL	12/10/98
CHECKED	TOM CRENNA	1/8/99
APPROVED		

FERMILAB PPD/ETT/ES CDMS (E-891)
ZIP MODULE
DUAL NON_INVERTING BUFFER BLOCK

SIZE	FSCM NO.	DWG. NO.	REV
A			

SCALE		SHEET 12-7

REVISIONS			
REV	DESCRIPTION	DATE	APPROVED

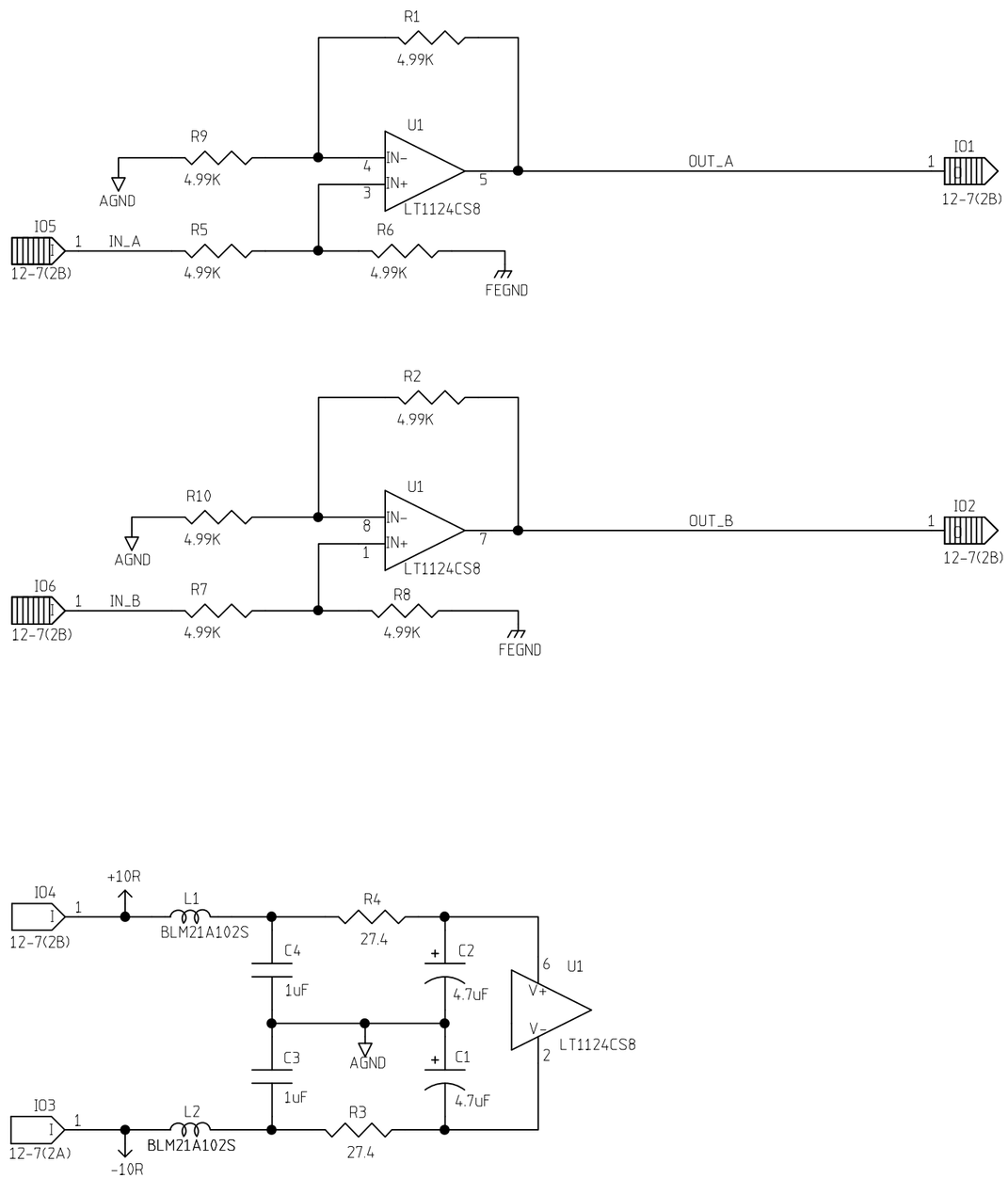

	NAME	DATE
ORIGINATOR	MERLE HALDEMAN	11/17/98
DRAWN	BRUCE MERKEL	11/17/98
CHECKED	TOM CRENNA	1/8/99
APPROVED		

FERMILAB PPD/ETT/ES CDMS (E-891)
ZIP MODULE
DUAL NON-INVERTING BUFFERS

SIZE	FSCM NO.	DWG. NO.	REV
B			

SCALE | SHEET 12-8

REVISIONS			
REV	DESCRIPTION	DATE	APPROVED

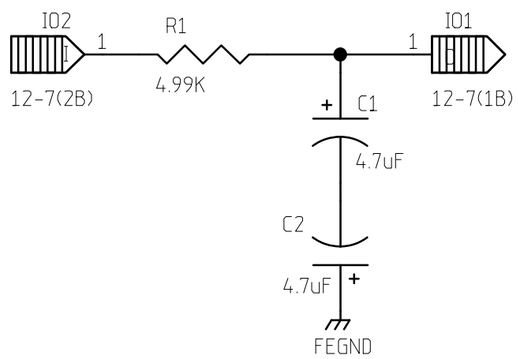

	NAME	DATE
ORIGINATOR	MERLE HALDEMAN	12/09/98
DRAWN	BRUCE MERKEL	12/09/98
CHECKED	TOM CRENNA	1/8/99
APPROVED		

FERMILAB PPD/ETT/ES CDMS (E-891)
ZIP MODULE
BUFFER FILTER

SIZE	FSCM NO.	DWG. NO.	REV
A			

SCALE		SHEET 12-9

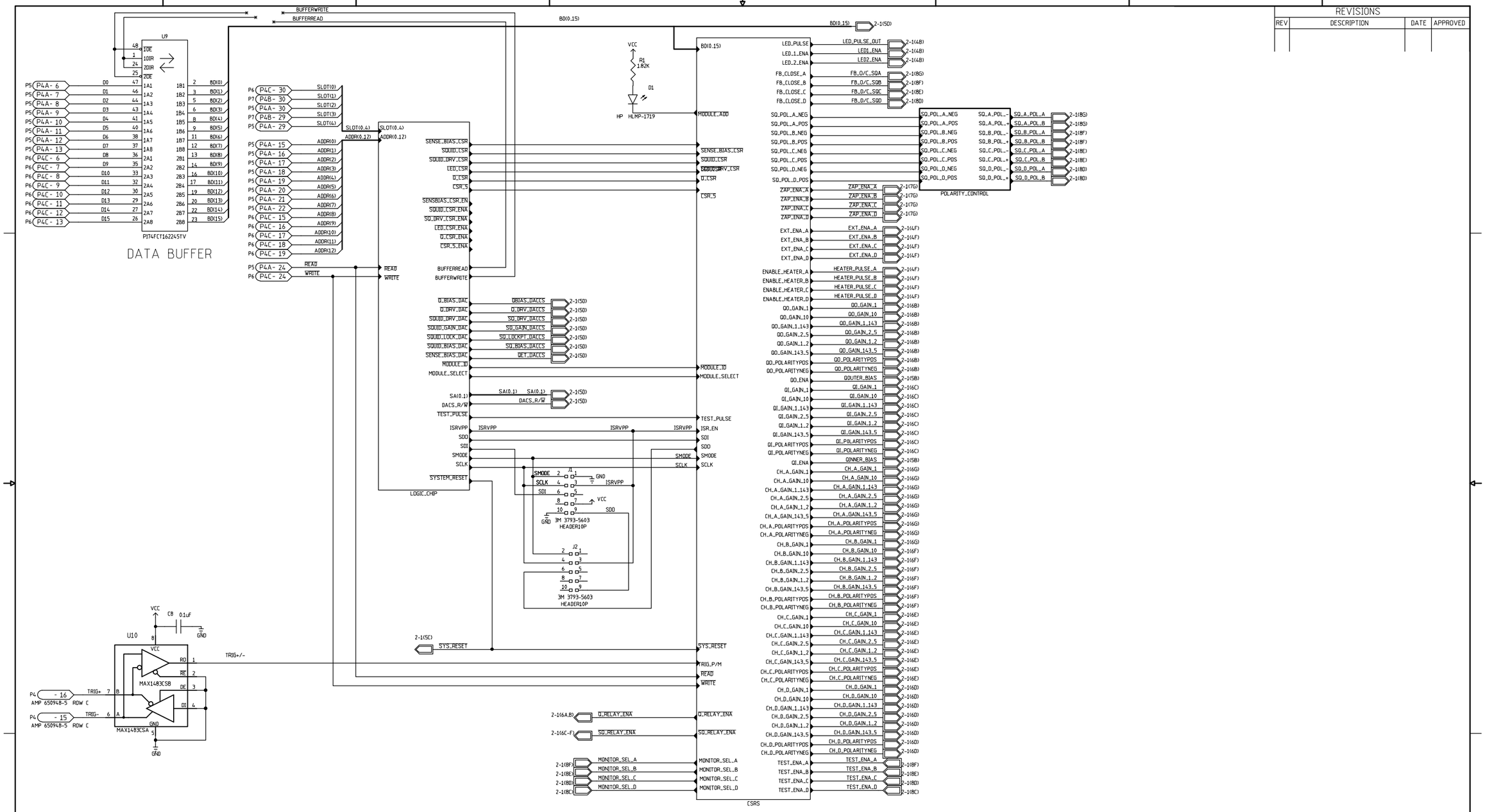

REVISIONS			
REV	DESCRIPTION	DATE	APPROVED

	NAME	DATE
ORIGINATOR	MERLE HALDEMAN	11/18/98
DRAWN	BRUCE MERKEL	11/18/98
CHECKED	TOM CRENNA	12/9/98
APPROVED		

FERMILAB PPD/ EET/ ES CDMS(E-891)
ZIP MODULE
LOGIC BLOCK DIAGRAM

SIZE	FSCM NO.	DWG. NO.	REV
D			
SCALE		SHEET 13-1	

DWG. NO.	SH.	REV

REVISIONS

REV	DESCRIPTION	DATE	APPROVED

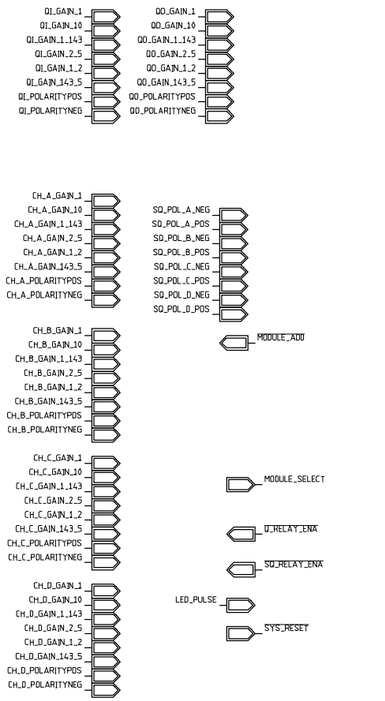

	NAME	DATE
ORIGINATOR	MERLE HALDEMAN	11/18/98
DRAWN	BRUCE MERKEL	11/18/98
CHECKED	TOM CRENNA	12/9/98
APPROVED		

FERMILAB PPD/ EET/ ES CDMS(E-891)
ZIP MODULE
CSR LOGIC

SIZE	FSCM NO.	DWG. NO.	REV
D			

SCALE | SHEET 13-4

DWG. NO.	SH.	REV

REVISIONS			
REV	DESCRIPTION	DATE	APPROVED
0	UNDER DEVELOPMENT	1-20-99	

11mSEC PULSE

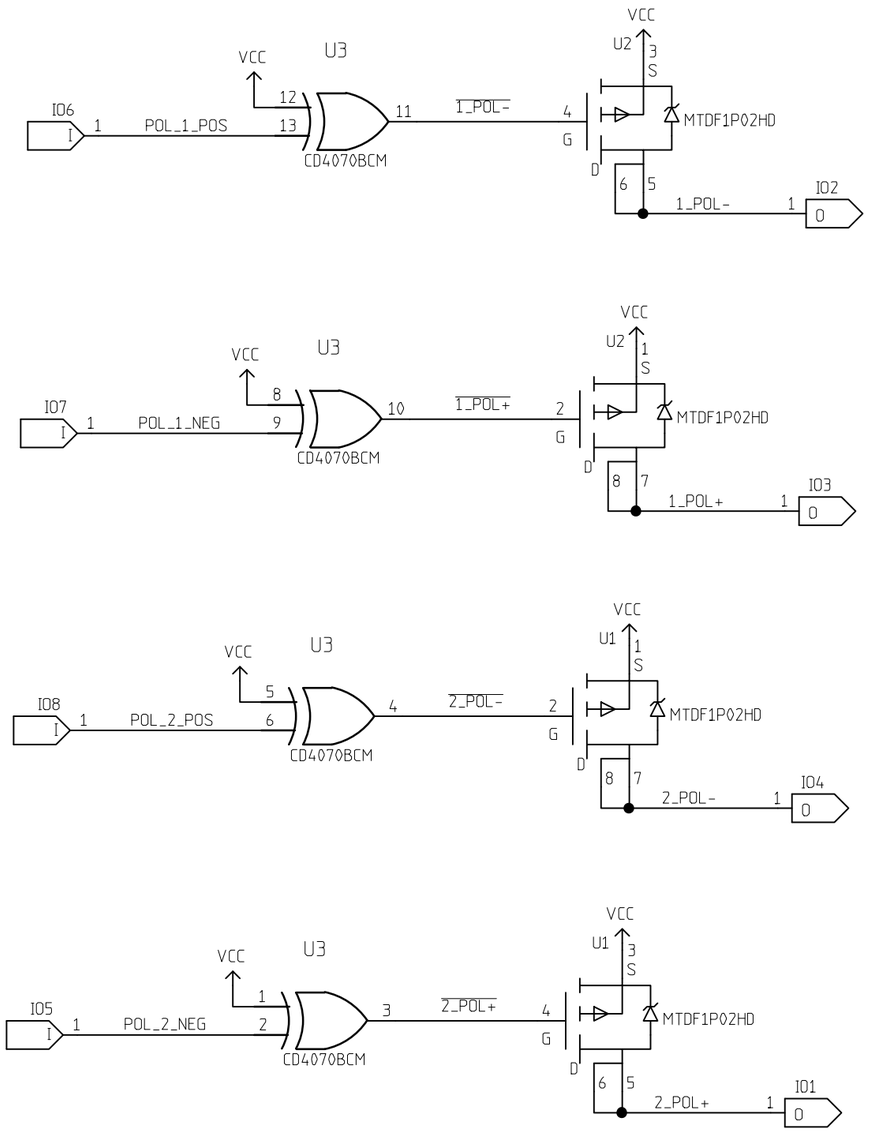

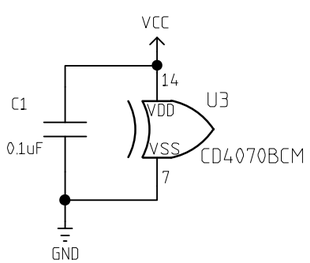

	NAME	DATE
ORIGINATOR	MERLE HALDEMAN	11/18/98
DRAWN	BRUCE MERKEL	11/18/98
CHECKED	TOM CRENNA	1/8/99
APPROVED		

FERMILAB PPD/ETT/ES CDMS (E-891)
ZIP MODULE
POLARITY CONTROL

SIZE	FSCM NO.	DWG. NO.	REV
B			
SCALE		SHEET 13-5	

REVISIONS			
REV	DESCRIPTION	DATE	APPROVED
0	UNDER DEVELOPMENT	1-20-99	

11mSEC ONE SHOT

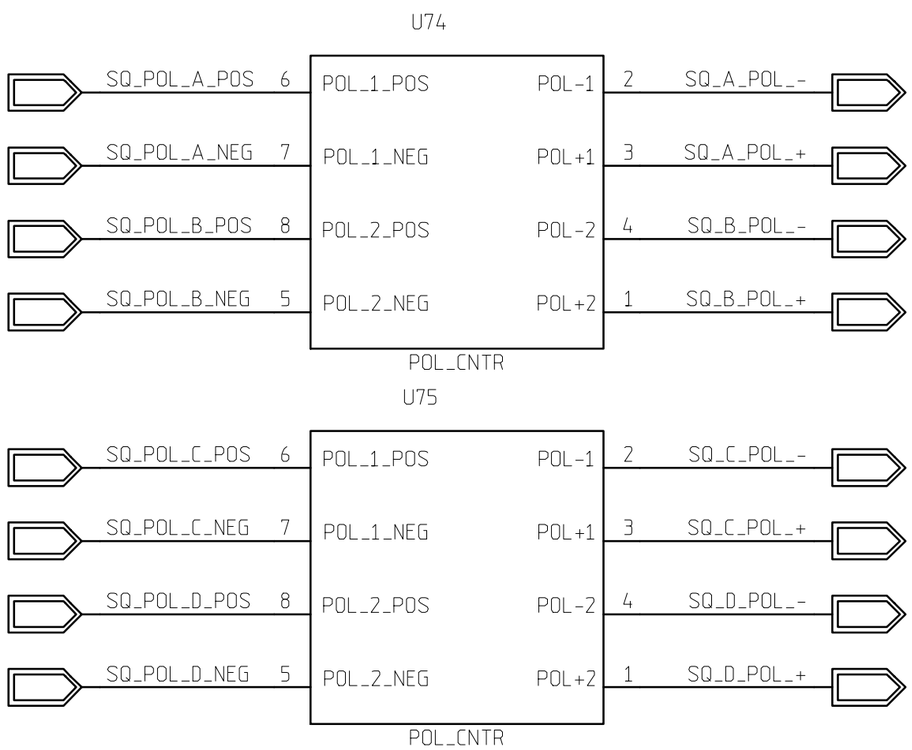

	NAME	DATE
ORIGINATOR	MERLE HALDEMAN	11/18/98
DRAWN	BRUCE MERKEL	11/18/98
CHECKED	TOM CRENNA	1/8/99
APPROVED		

FERMILAB PPD/ETT/ES CDMS (E-891)
ZIP MODULE
POLARITY CONTROL

SIZE	FSCM NO.	DWG. NO.	REV
A			
SCALE		SHEET 13-5	

REVISIONS			
REV	DESCRIPTION	DATE	APPROVED
0	UNDERDEVELOPMENT	1/19/99	

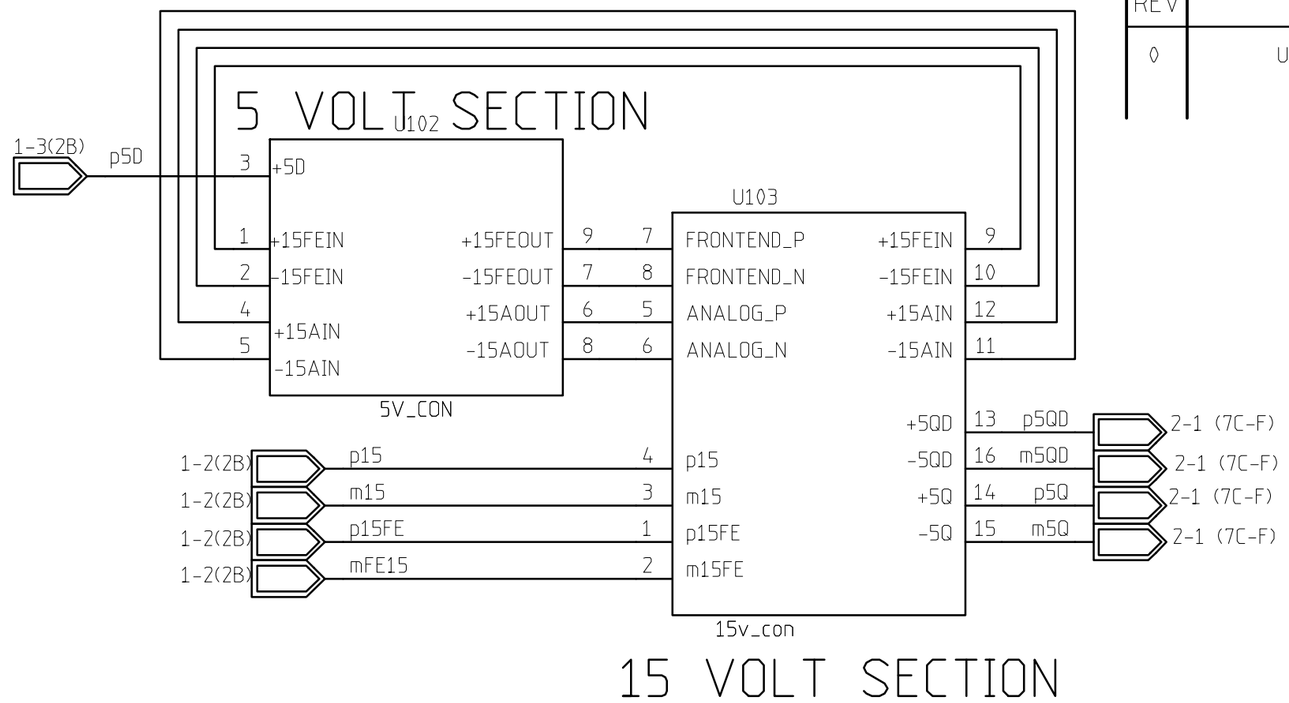

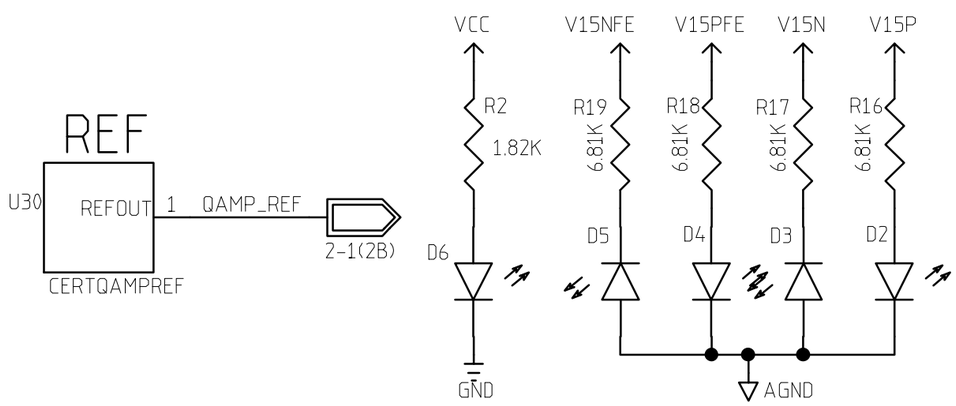

	NAME	DATE
ORIGINATOR	MERLE HALDEMAN	11/18/98
DRAWN	BRUCE MERKEL	11/18/98
CHECKED	TOM CRENNA	1/8/99
APPROVED		

FERMILAB PPD/ETT/ES CDMS (E-891)
ZIP MODULE
POWER CONTROL

SIZE	FSCM NO.	DWG. NO.	REV
A			
SCALE		SHEET 14-1	

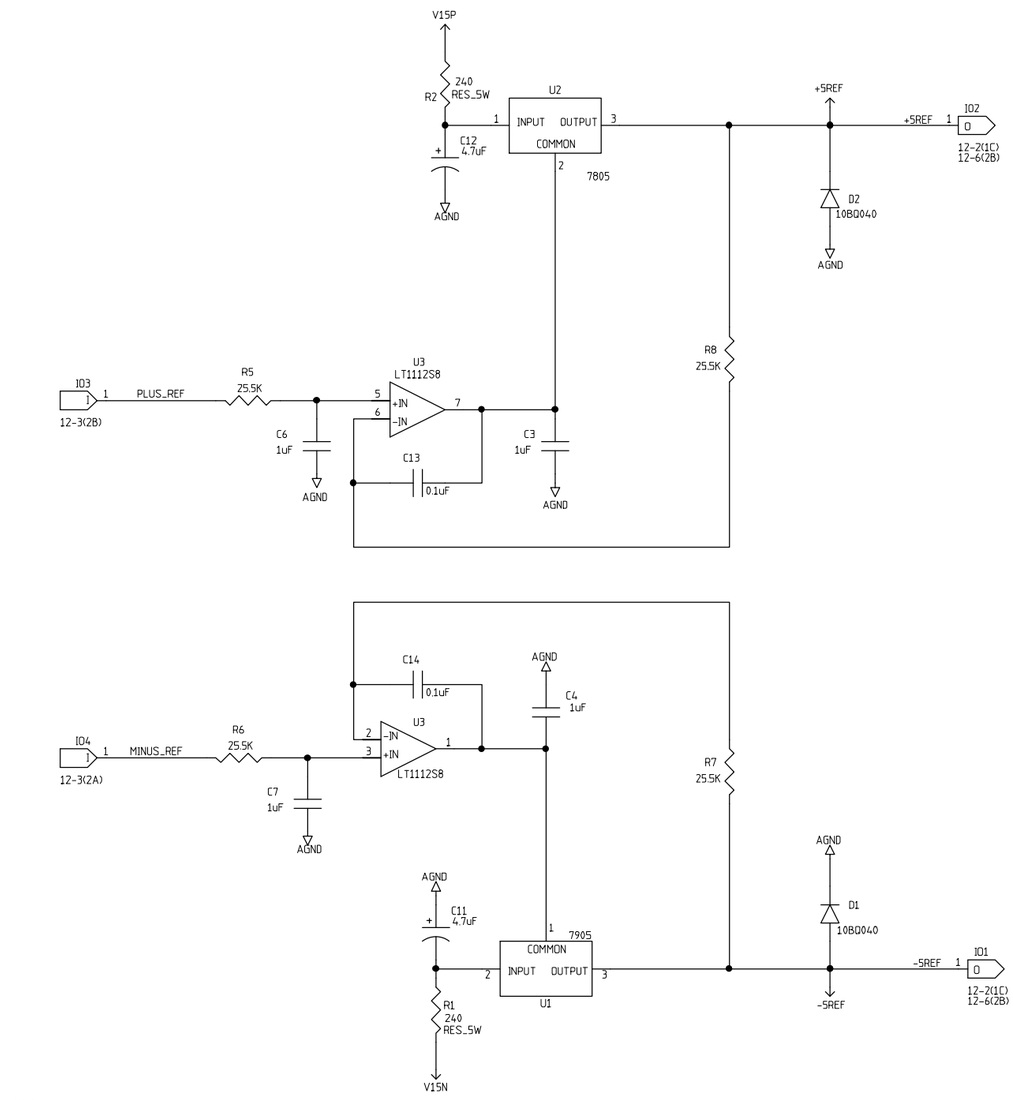

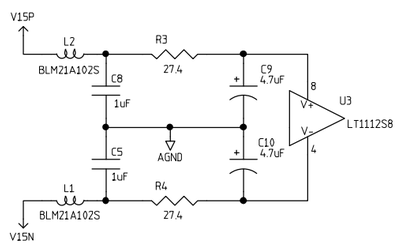

REVISIONS			
REV	DESCRIPTION	DATE	APPROVED

	NAME	DATE
ORIGINATOR	MERLE HALDEMAN	12/01/98
DRAWN	BRUCE MERKEL	12/01/98
CHECKED	TOM CRENNA	1/8/99
APPROVED		

FERMILAB PPD/ ETT/ ES CDMS(E-891)
ZIP MODULE
DAC +/-5V REFERENCES

SIZE	FSCM NO.	DWG. NO.	REV
C			
SCALE		SHEET 12-5	

REVISIONS			
REV	DESCRIPTION	DATE	APPROVED

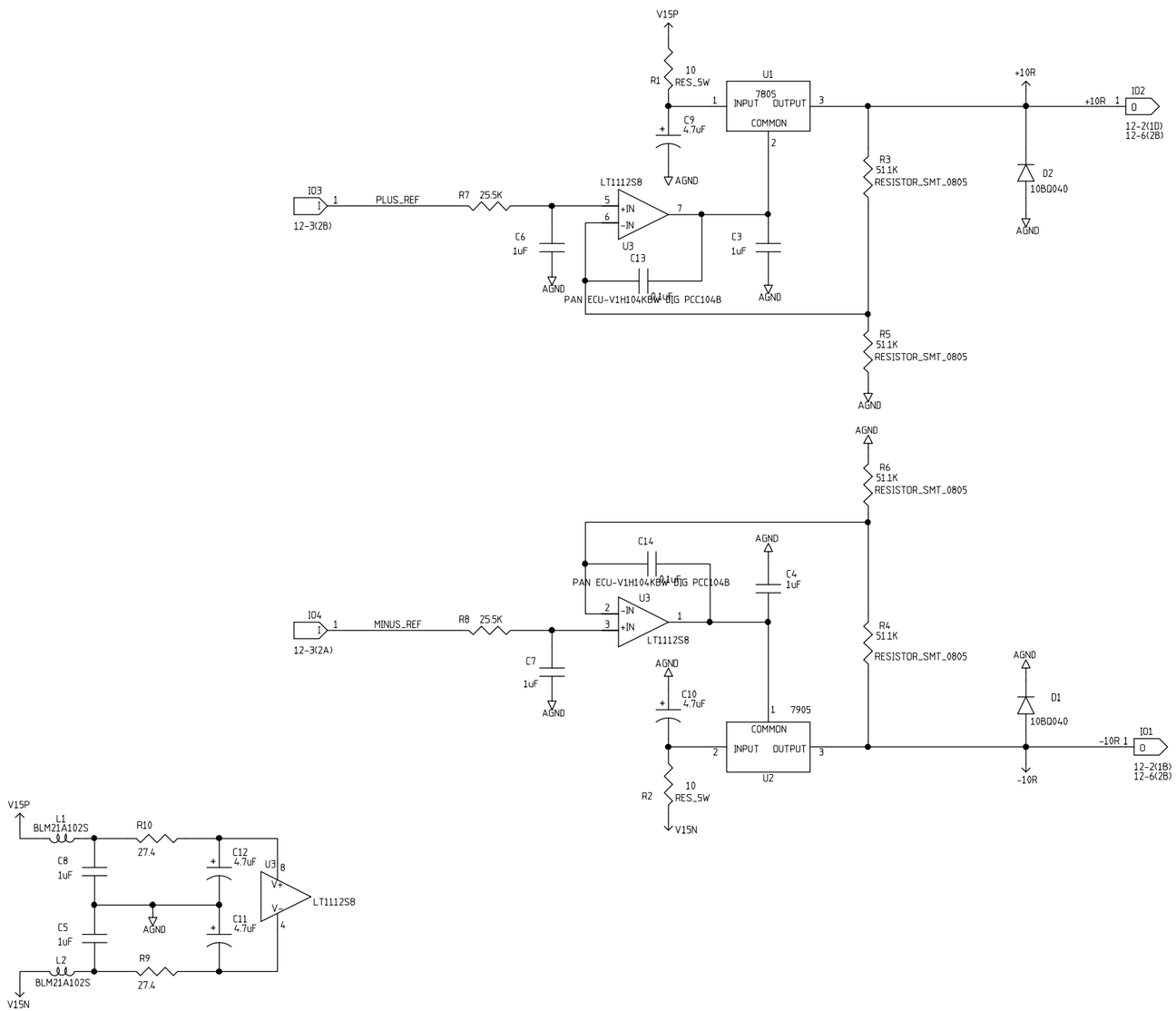

	NAME	DATE
ORIGINATOR	MERLE HALDEMAN	12/01/98
DRAWN	BRUCE MERKEL	12/01/98
CHECKED	TOM CRENNA	1/8/99
APPROVED		

FERMILAB PPD/ ETT/ ES CDMS(E-891)
ZIP MODULE
DAC +/- 10 VOLT REFERENCES

SIZE	FSCM NO.	DWG. NO.	REV
C			
SCALE		SHEET 12-4	

REVISIONS			
REV	DESCRIPTION	DATE	APPROVED

10 VOLT REFERENCE

10 VOLT BUFFER & NOISE FILTER

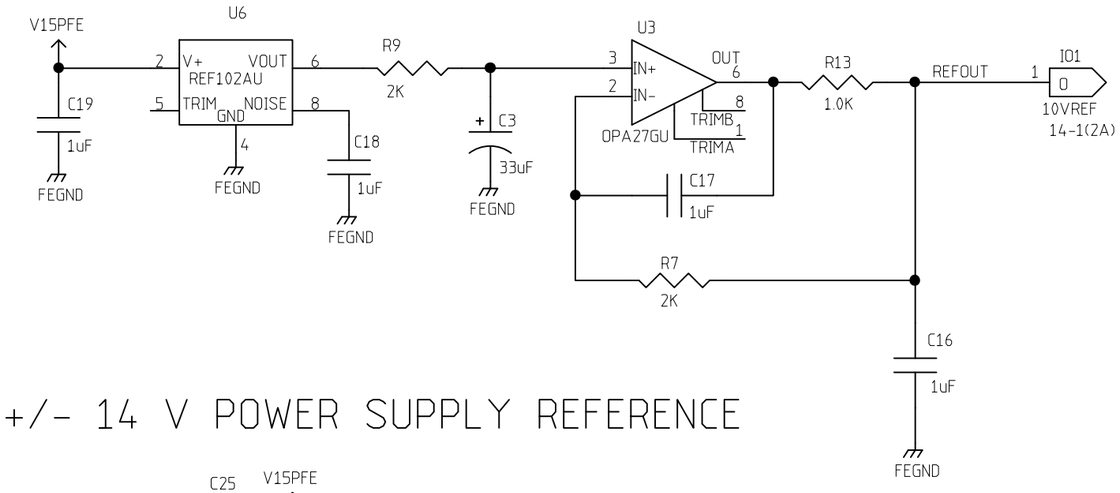

+/- 14 V POWER SUPPLY REFERENCE

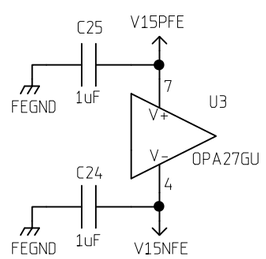

	NAME	DATE
ORIGINATOR	MERLE HALDEMAN	11/18/98
DRAWN	BRUCE MERKEL	11/18/98
CHECKED	TOM CRENNA	1/8/99
APPROVED		

FERMILAB PPD/ETT/ES CDMS (E-891)
ZIP MODULE
Q AMP REFERENCE

SIZE	FSCM NO.	DWG. NO.	REV
B			

SCALE | SHEET 14-4