REVISIONS			
REV	DESCRIPTION	DATE	APPROVED
A	CHANGED U1 FROM ANALOG DEVUCES SSM2141S TO LINEAR TECHNOLOGY LT1357CS8 FOR FASTER RESPONSE ALSO ADDED TWO 4.7uF CAPS TO BYPASS	4/28/99	M.HALDEMAN

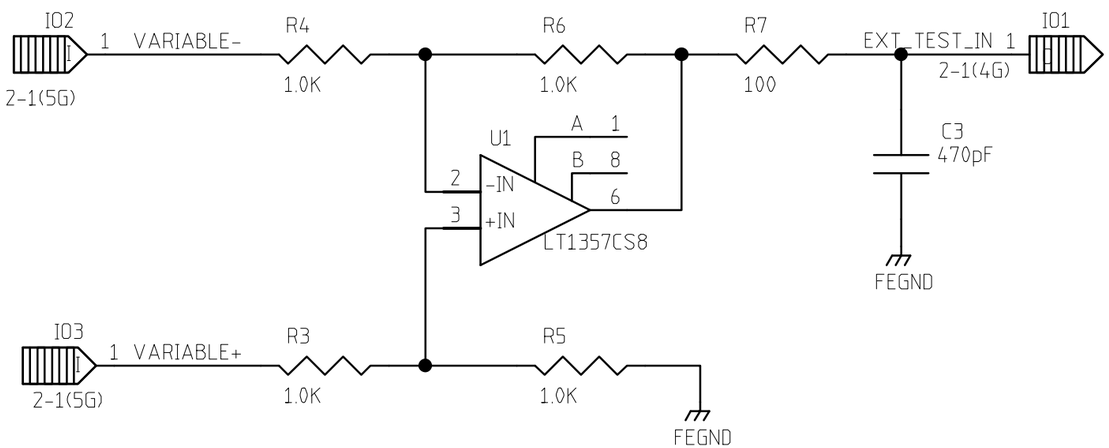

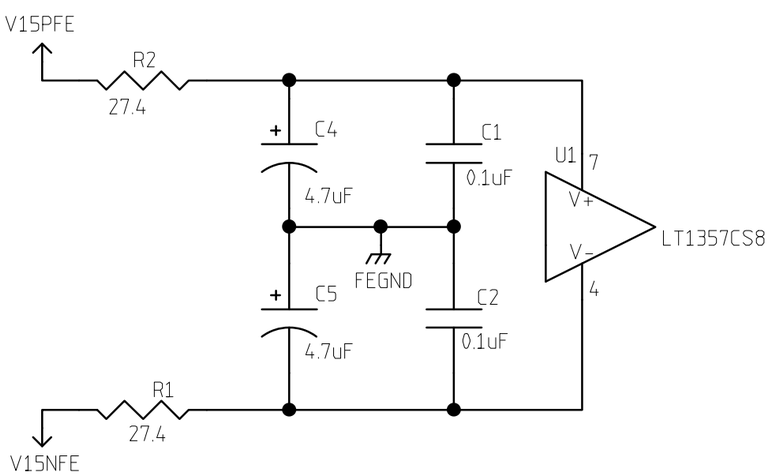

NOTE: FOR HIGHER SPEED USE A LT1363CS8

	NAME	DATE
ORIGINATOR	MERLE HALDEMAN	11/16/98
DRAWN	BRUCE MERKEL	11/16/98
CHECKED	TOM CRENNA	1/8/99
APPROVED		

FERMILAB PPD/ETT/ES CDMS (E-891)
ZIP MODULE
EXTERNAL TEST RECEIVER

SIZE	FSCM NO.	DWG. NO.	REV
A			A

SCALE | SHEET 11-1