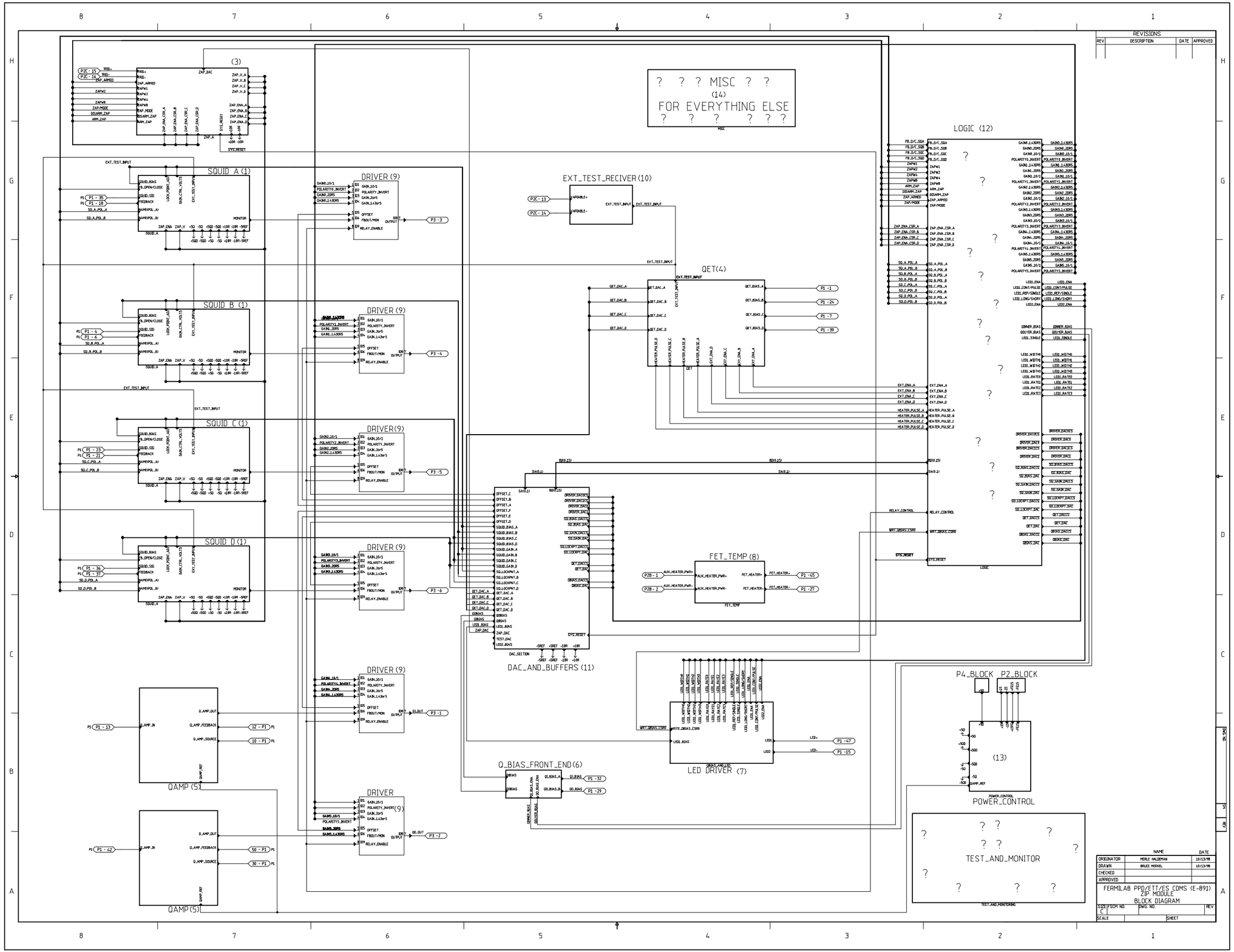
? ? ? MISC ? ?
(14)
FOR EVERYTHING ELSE
? ? ? ? ? ?
MISC
(3)
ZAP_DAC
SQUID A (1)
SQUID B (1)
SQUID C (1)
SQUID D (1)
DRIVER (9)
EXT_TEST_RECIVER (10)
QET(4)
LOGIC (12)
FET_TEMP (8)
DAC_AND_BUFFERS (11)
LED DRIVER (7)
Q_BIAS_FRONT_END(6)
QAMP (5)
P4_BLOCK P2_BLOCK
(13)
POWER_CONTROL
TEST_AND_MONITOR
TEST_AND_MONITORING
REVISIONS
REV DESCRIPTION DATE APPROVED
ORIGINATOR MERLE HALDEMAN 10/13/98
DRAWN BRAKE MERNEL 10/13/98
CHECKED
APPROVED
FERMILAB PPD/ETT/ES CDMS (E-891)
ZIP MODULE
BLOCK DIAGRAM
SIZE C
DWG. NO.
REV
SCALE
SHEET

REVISIONS			
REV	DESCRIPTION	DATE	APPROVED

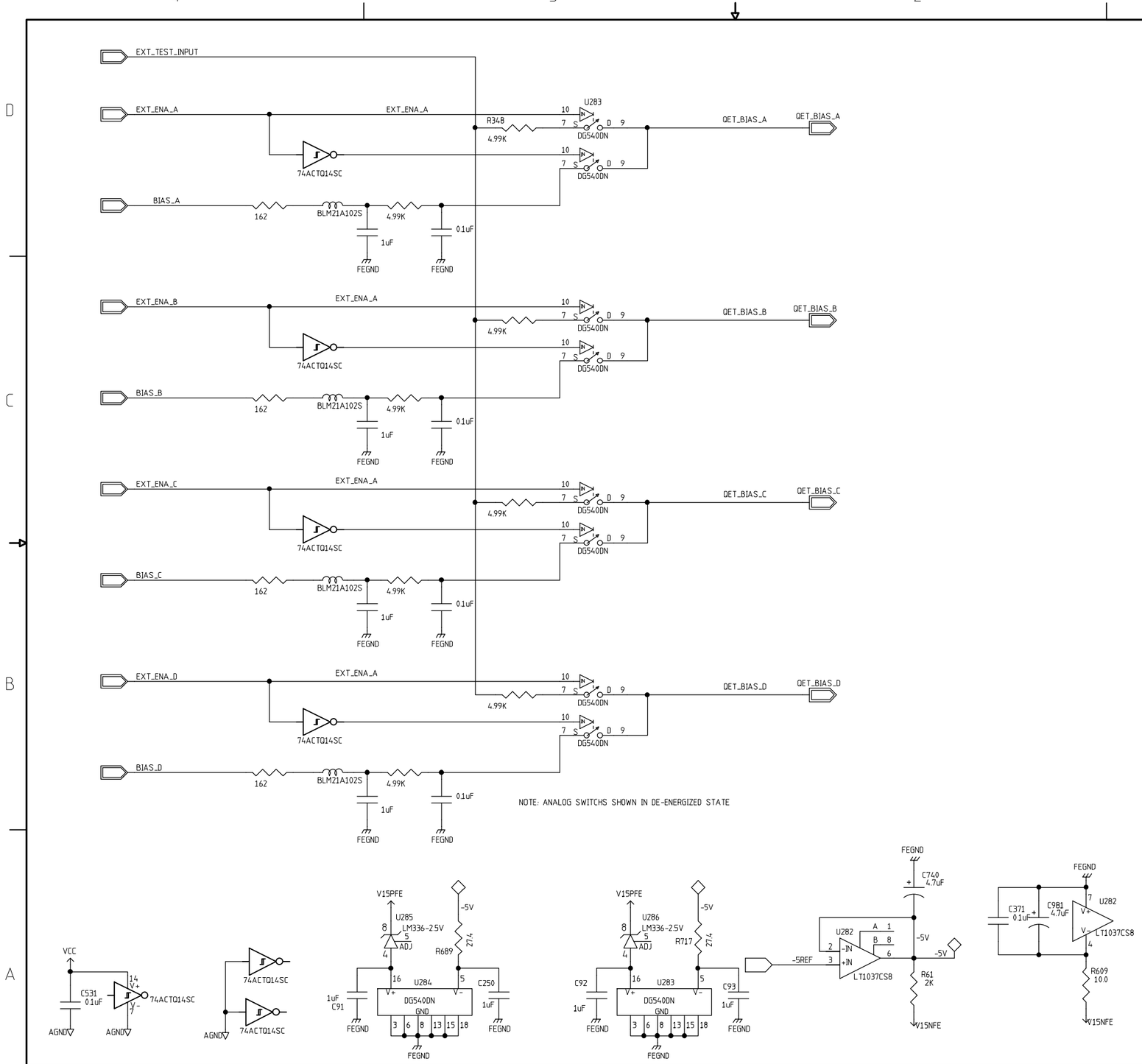

	NAME	DATE
ORIGINATOR	MERLE HALDEMAN	10/6/98
DRAWN	BRUCE MERKEL	10/6/98
CHECKED		
APPROVED		

FERMILAB PPD/EET/ES CDMS (E-891)

ZIP MODULE

QET BIAS SELECTOR

SIZE	FSCM NO.	DWG. NO.	REV
C			
SCALE		SHEET	

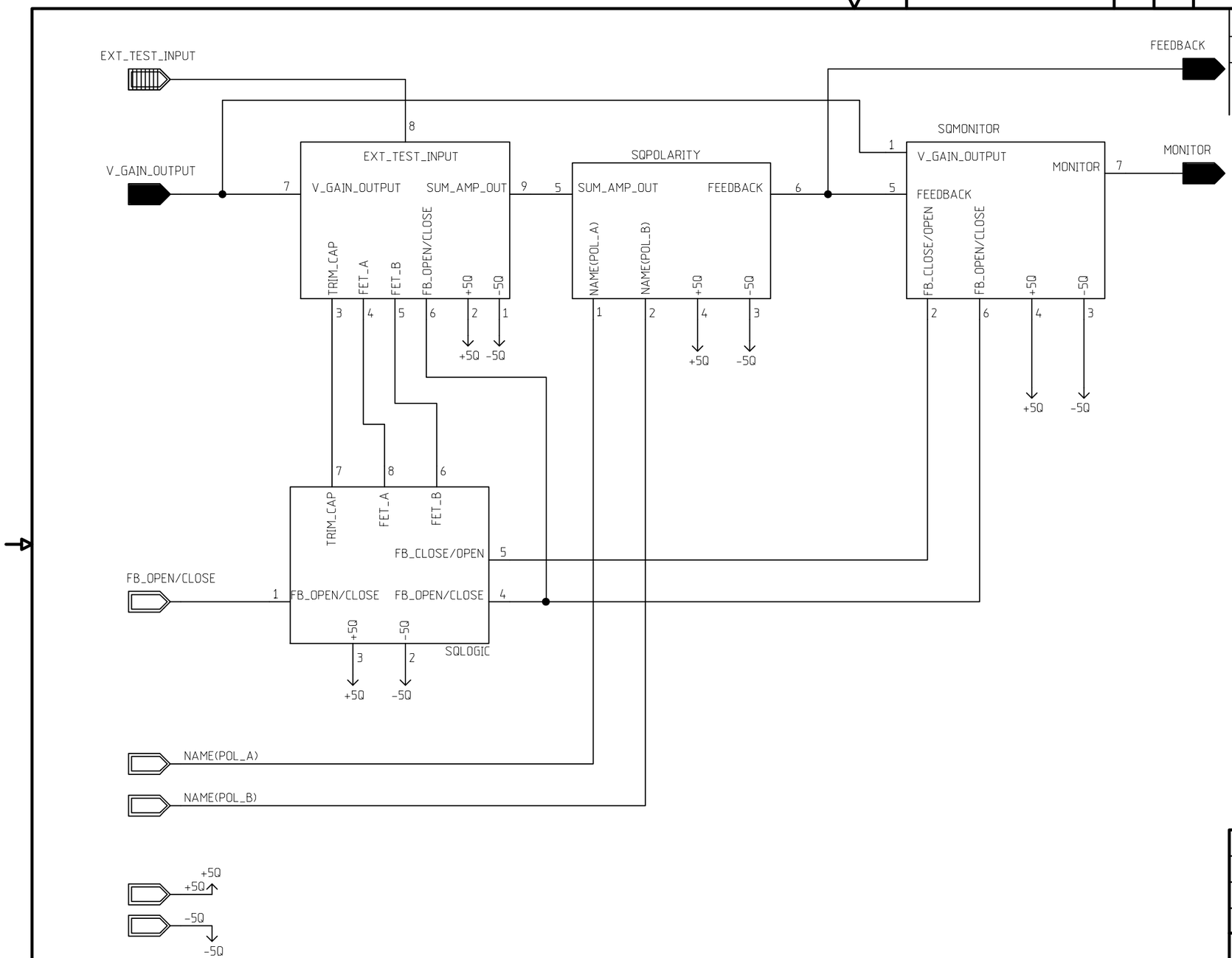

DWG. NO. | SH. | REV

REVISIONS

REV	DESCRIPTION	DATE	APPROVED

	NAME	DATE
ORIGINATOR	MERLE HALDEMAN	11/02/98
DRAWN	BRUCE MERKEL	11/02/98
CHECKED		
APPROVED		

FERMILAB PPD/ETT/ES CDMS (E-891)
ZIP MODULE
SQUID FEEDBACK CONTROL

SIZE	FSCM NO.	DWG. NO.	REV
B			

SCALE | | SHEET

REVISIONS			
REV	DESCRIPTION	DATE	APPROVED

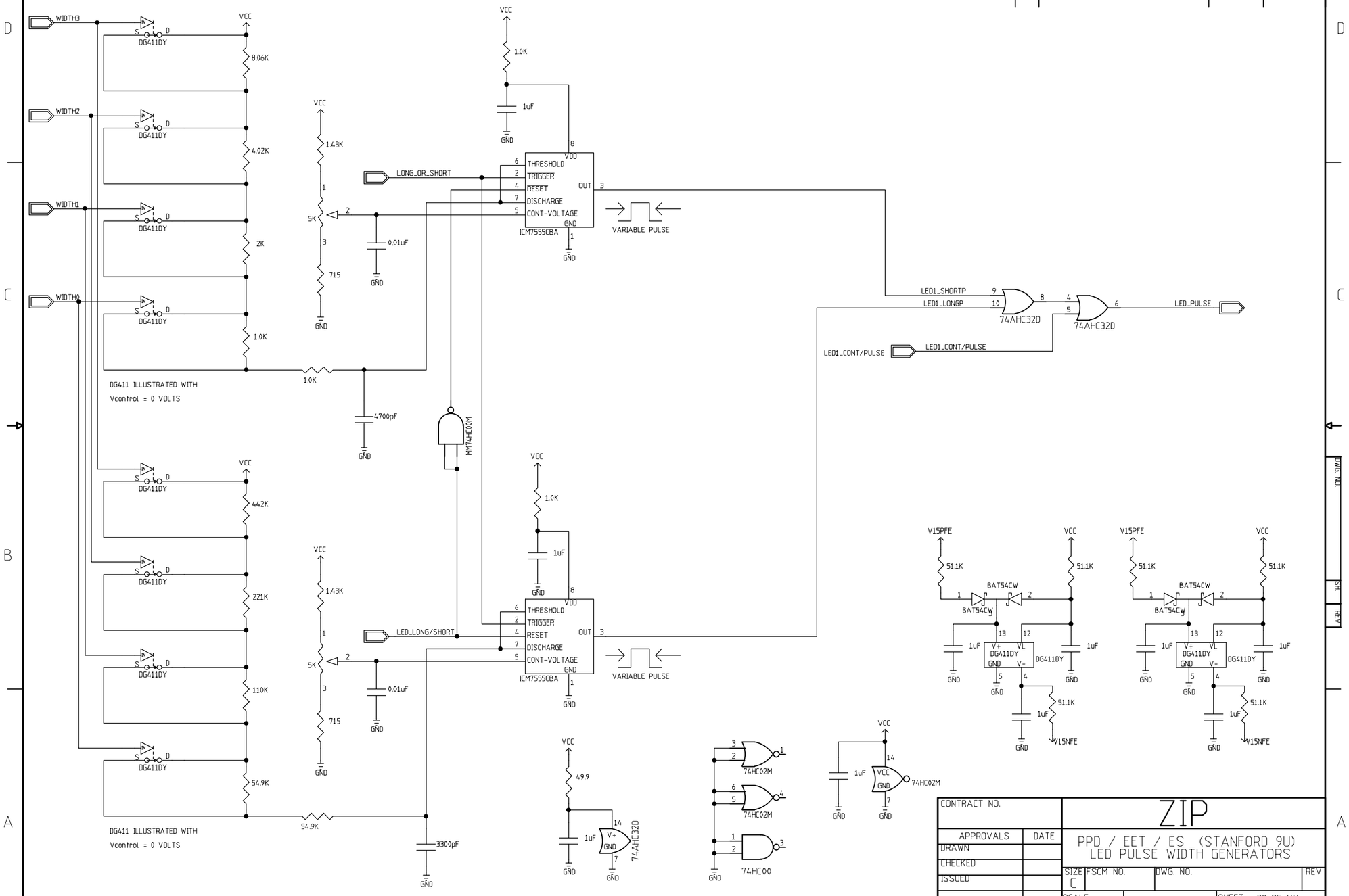

CONTRACT NO.		ZIP		
APPROVALS	DATE	PPD / EET / ES (STANFORD 9U) LED PULSE WIDTH GENERATORS		
DRAWN				
CHECKED		SIZE C	FSCM NO.	DWG. NO.	REV
ISSUED		SCALE		SHEET 28 OF XX

REVISIONS			
REV	DESCRIPTION	DATE	APPROVED

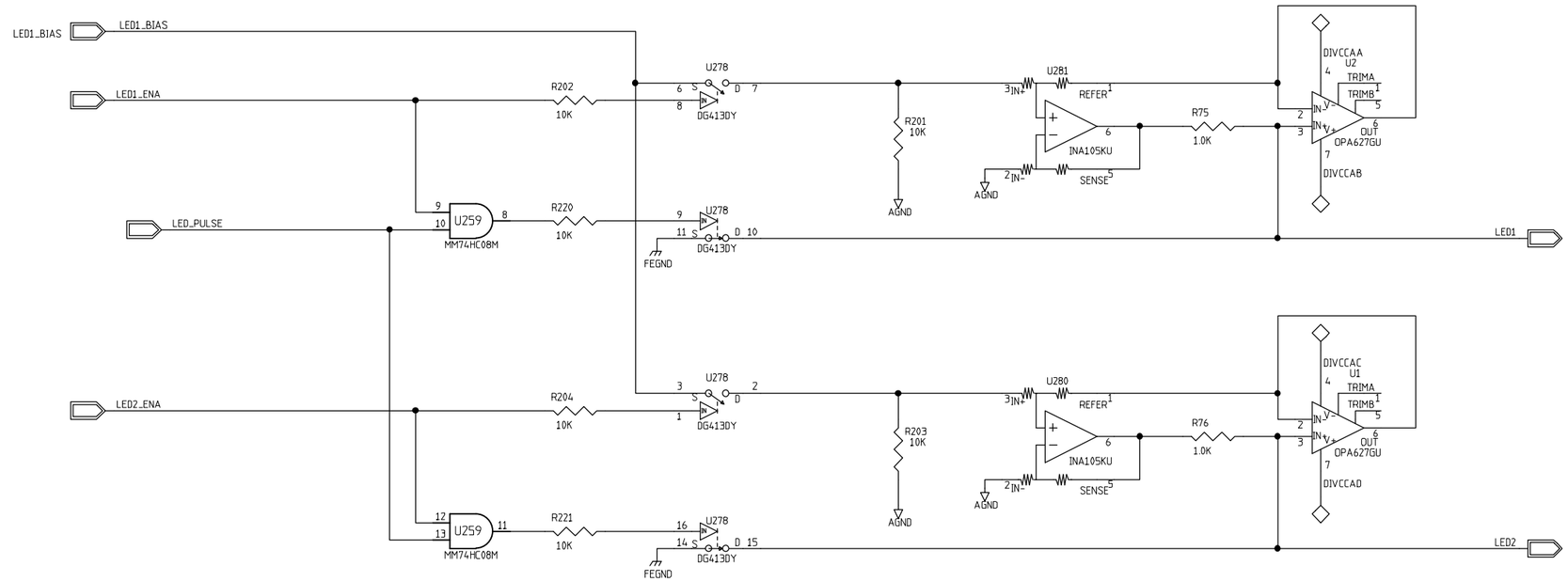

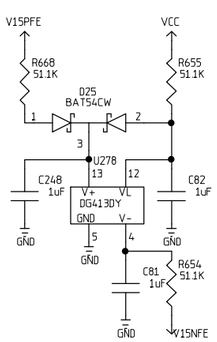

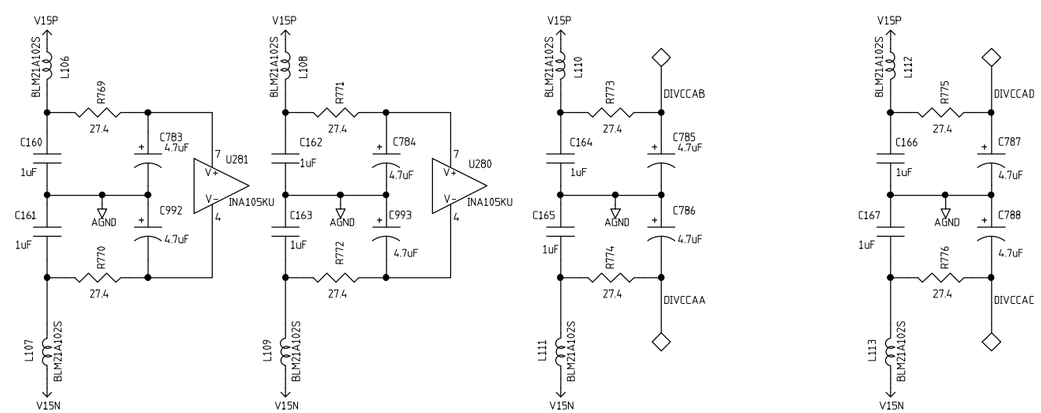

DIFFERENTIAL INPUT VOLTAGE CONTROLED CURRENT SOURCE

CONTRACT NO.		ZIP		
APPROVALS	DATE	PPD / ETT / ES (STANDFORD 9U)		
DRAWN		LED DIVCCS		
CHECKED		SIZE C	FSCM NO.	DWG. NO.	REV
ISSUED		SCALE		SHEET

REVISIONS			
REV	DESCRIPTION	DATE	APPROVED

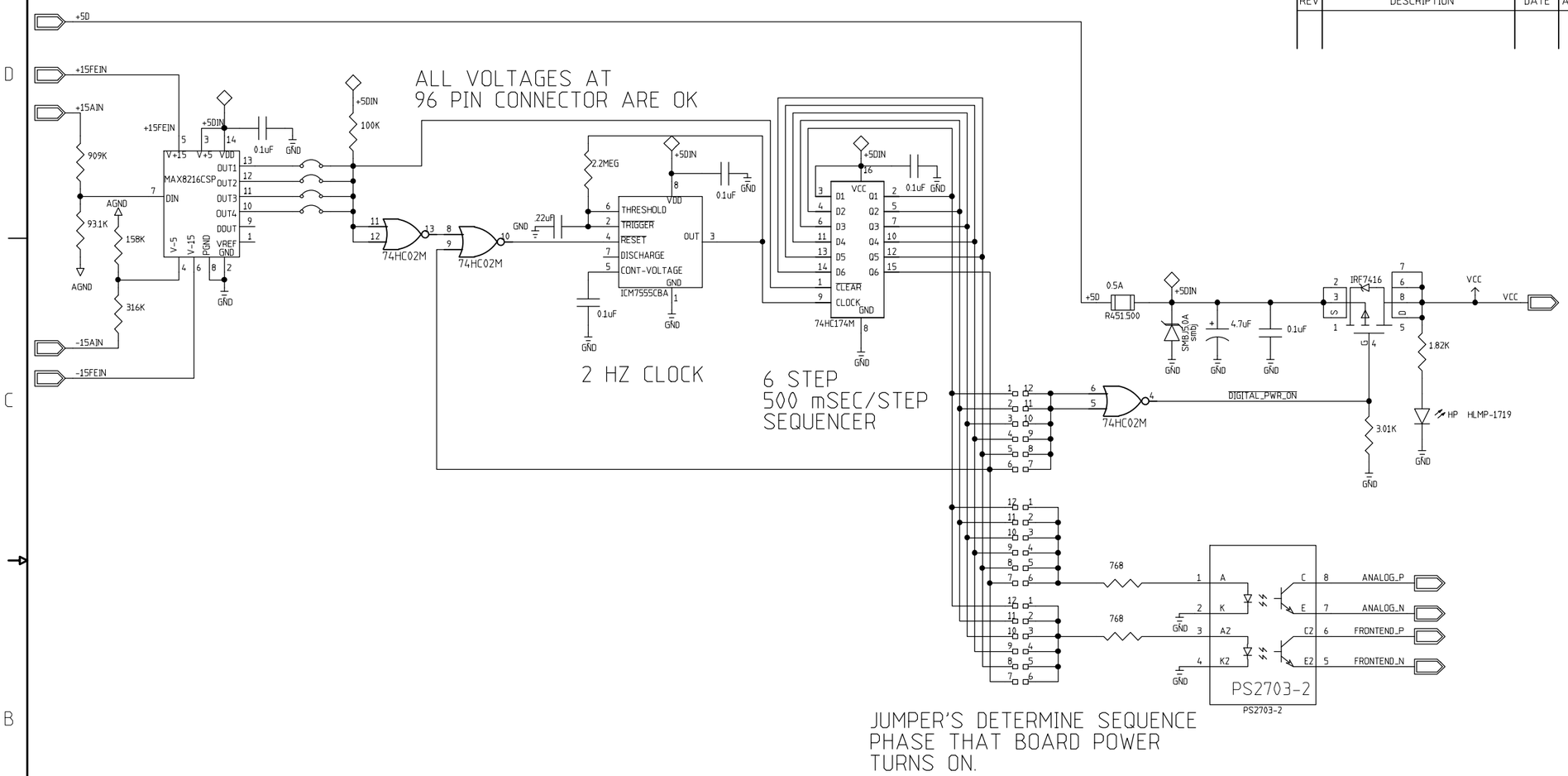

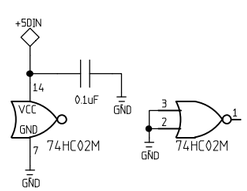

POWER ON SEQUENCER

	NAME	DATE
ORIGINATOR	MERLE HALDEMAN	10/13/98
DRAWN	BRUCE MERKEL	10/13/98
CHECKED		
APPROVED		

FERMILAB PPD/ETT/ES CDMS (E-891)
ZIP MODULE
5 VOLT SECTION

SIZE	FSCM NO.	DWG. NO.	REV
C			
SCALE		SHEET	

REVISIONS			
REV	DESCRIPTION	DATE	APPROVED

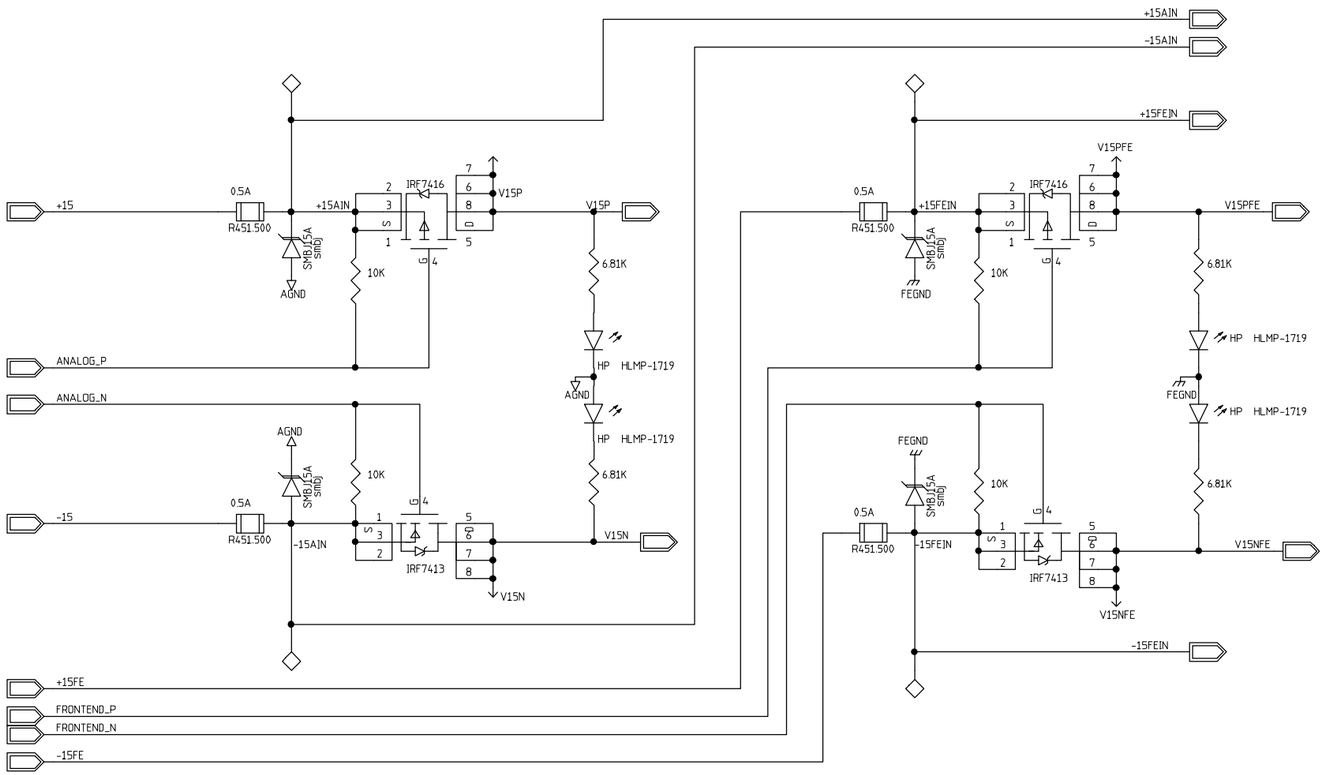

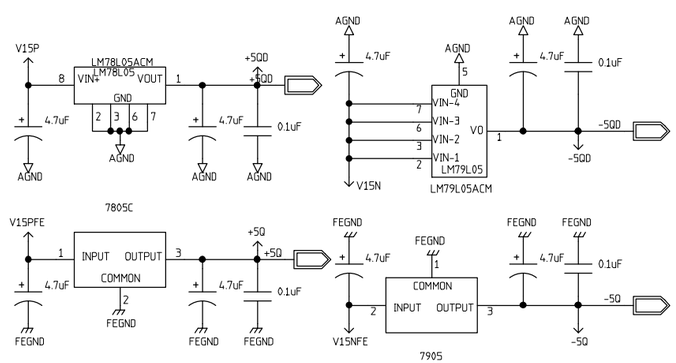

POWER ON SEQUENCER

	NAME	DATE
ORIGINATOR	MERLE HALDEMAN	10/8/98
DRAWN	BRUCE MERKEL	10/8/98
CHECKED		
APPROVED		

FERMILAB PPD/ETT/ES CDMS (E-891)
ZIP MODULE
15 VOLT SECTION

SIZE	FSCM NO.	DWG. NO.	REV
C			
SCALE		SHEET	

DWG. NO.
SH.
REV

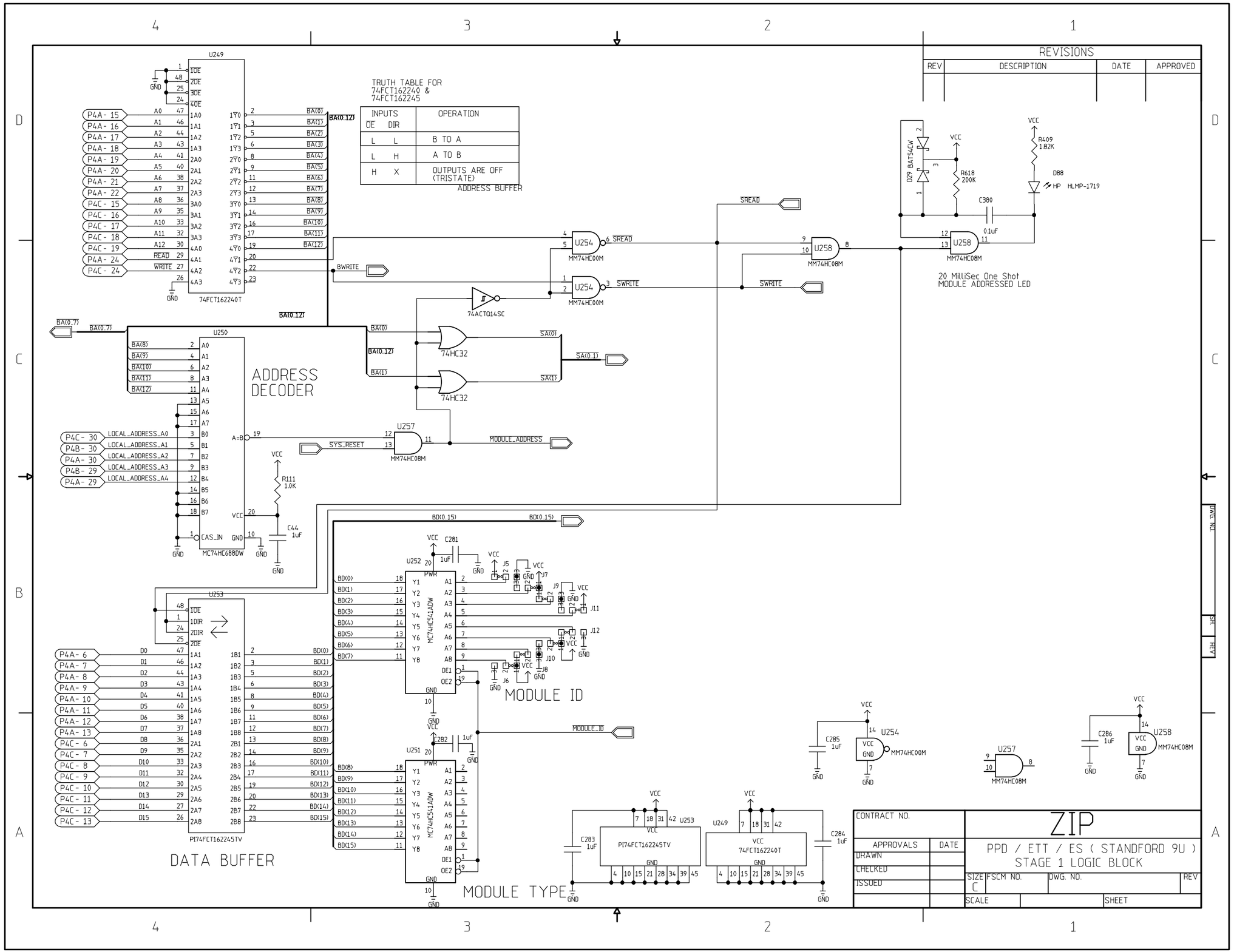

REVISIONS
REV
DESCRIPTION
DATE
APPROVED
TRUTH TABLE FOR
74FCT162240 &
74FCT162245
INPUTS
OE DIR
OPERATION
L L B TO A
L H A TO B
H X OUTPUTS ARE OFF (TRISTATE)
ADDRESS BUFFER
U249
74FCT162240T
U250
ADDRESS DECODER
MC74HC688DW
U253
PI74FCT162245TV
DATA BUFFER
U252
U251
MC74HC541ADW
MODULE ID
MODULE TYPE
U254
MM74HC00M
U258
MM74HC08M
74ACTQ14SC
74HC32
U257
MM74HC08M
20 MilliSec One Shot
MODULE ADDRESSED LED
D29 BAT54CW
R618
200K
R409
1.82K
D88
HP HLMP-1719
C380
0.1uF
R111
1.0K
C44
1uF
C281
C282
C283
C284
C285
C286
1uF
SYS_RESET
MODULE_ADDRESS
MODULE_ID
BWRITE
SREAD
SWRITE
LOCAL_ADDRESS_A0
LOCAL_ADDRESS_A1
LOCAL_ADDRESS_A2
LOCAL_ADDRESS_A3
LOCAL_ADDRESS_A4
PI74FCT162245TV
74FCT162240T
CONTRACT NO.
APPROVALS
DATE
DRAWN
CHECKED
ISSUED
ZIP
PPD / ETT / ES (STANDFORD 9U)
STAGE 1 LOGIC BLOCK
SIZE
C
FSCM NO.
DWG. NO.
REV
SCALE
SHEET

DWG. NO.	SH.	REV

REVISIONS

REV	DESCRIPTION	DATE	APPROVED

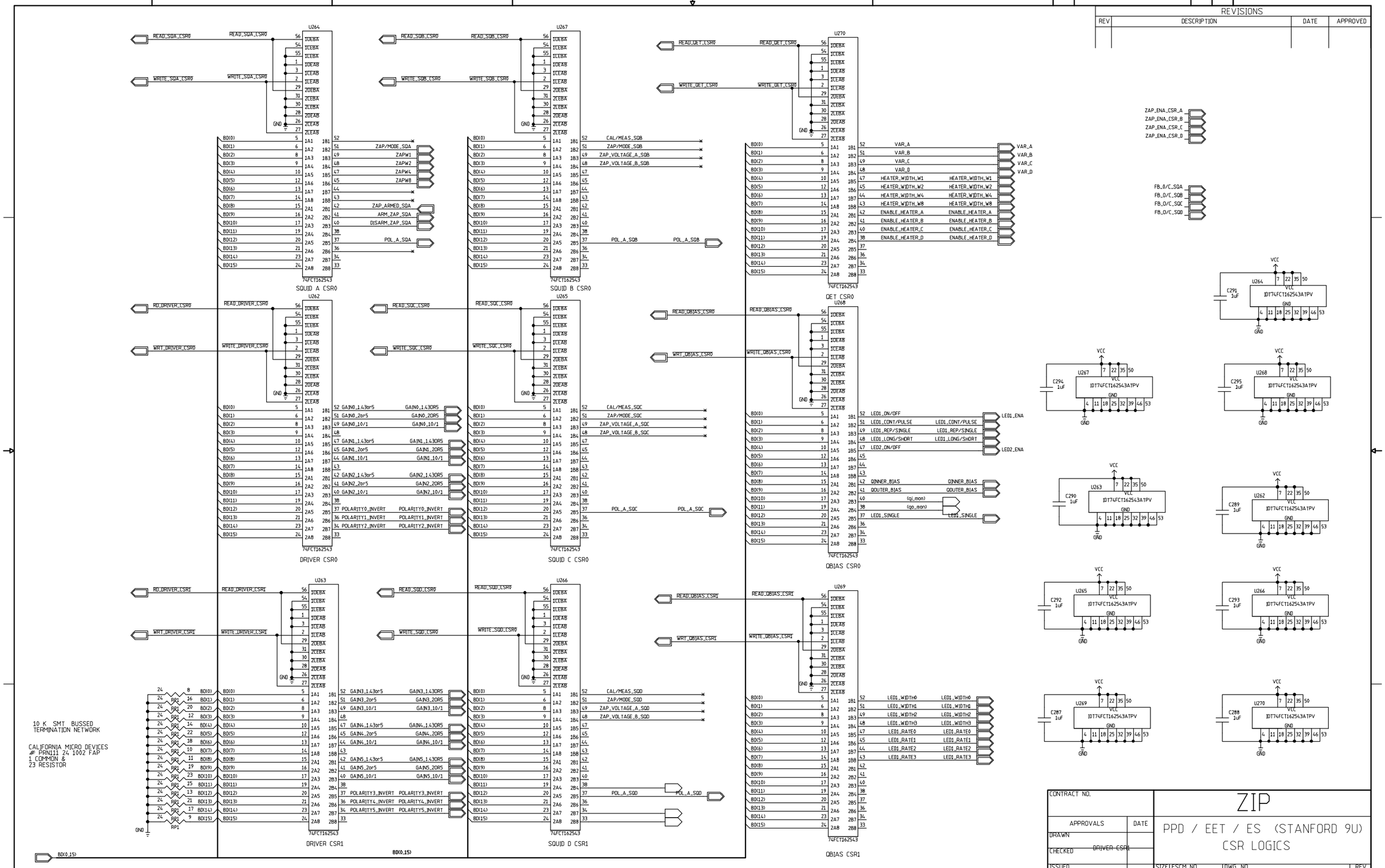

CONTRACT NO.		ZIP		
APPROVALS	DATE	PPD / EET / ES (STANFORD 9U) CSR LOGICS		
DRAWN				
CHECKED				
ISSUED		SIZE D	FSCM NO.	DWG. NO.	REV
		SCALE		SHEET

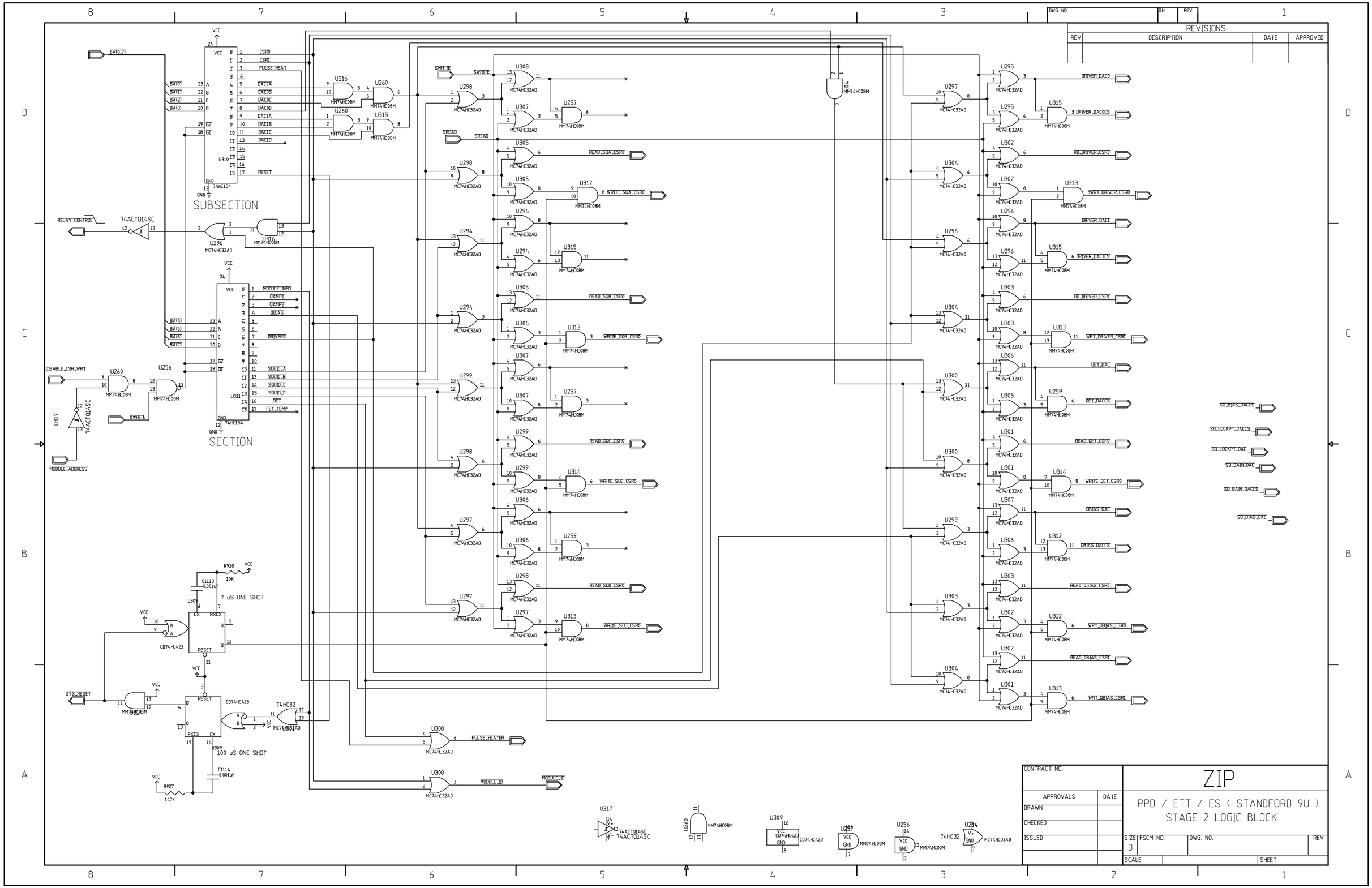

SUBSECTION
SECTION
7 uS ONE SHOT
100 uS ONE SHOT
REVISIONS
REV
DESCRIPTION
DATE
APPROVED
CONTRACT NO.
APPROVALS
DATE
DRAWN
CHECKED
ISSUED
ZIP
PPD / ETT / ES (STANDFORD 9U)
STAGE 2 LOGIC BLOCK
SIZE
D
FSCM NO.
DWG. NO.
REV
SCALE
SHEET

REVISIONS			
REV	DESCRIPTION	DATE	APPROVED

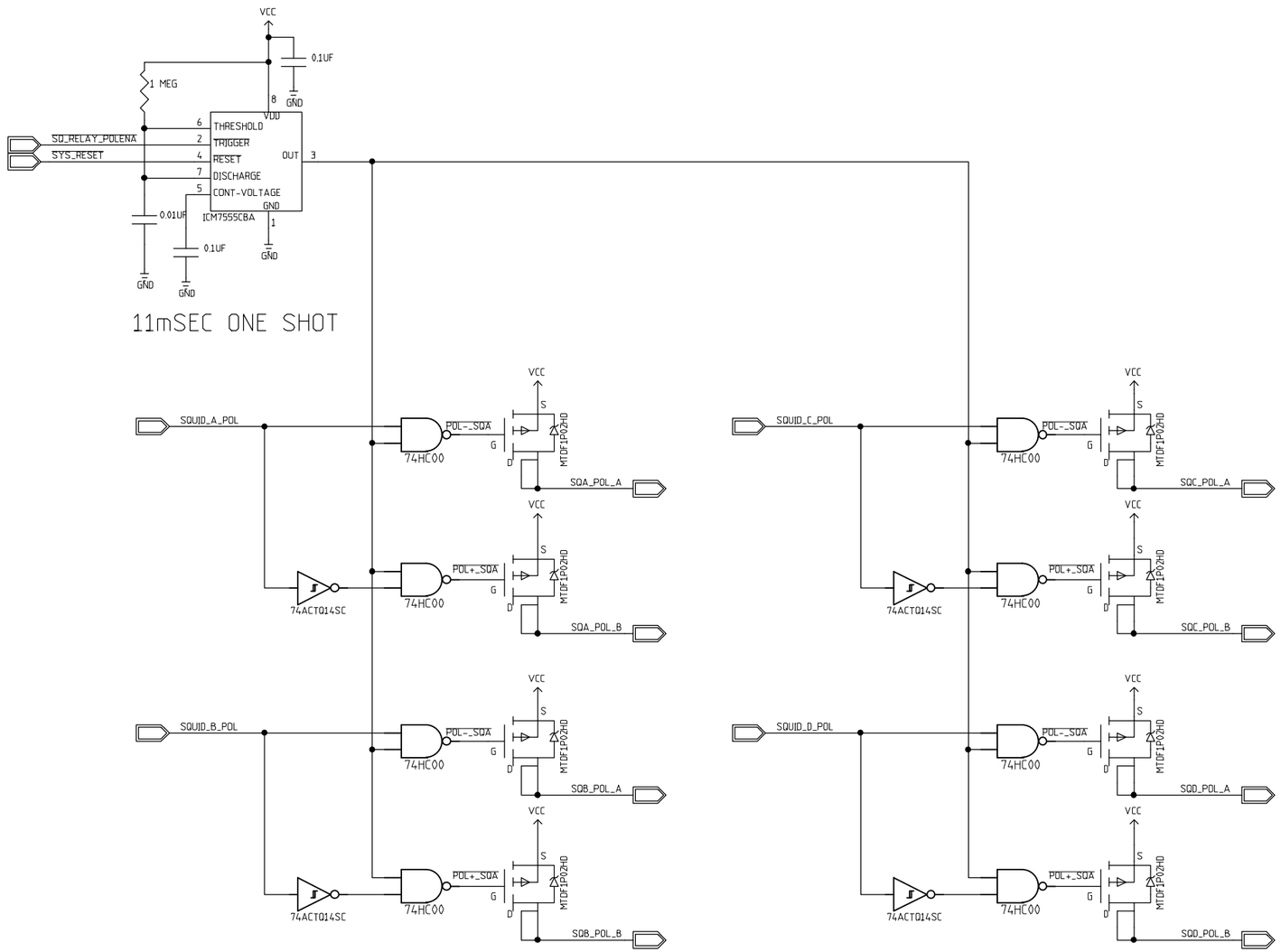

	NAME	DATE
ORIGINATOR	MERLE HALDEMAN	10/13/98
DRAWN	BRUCE MERKEL	10/13/98
CHECKED		
APPROVED		

FERMILAB PPD/ETT/ES CDMS (E-891)
ZIP MODULE
SQUID POLARITY

SIZE	FSCM NO.	DWG. NO.	REV
C			
SCALE		SHEET	

DWG. NO.
SH.
REV

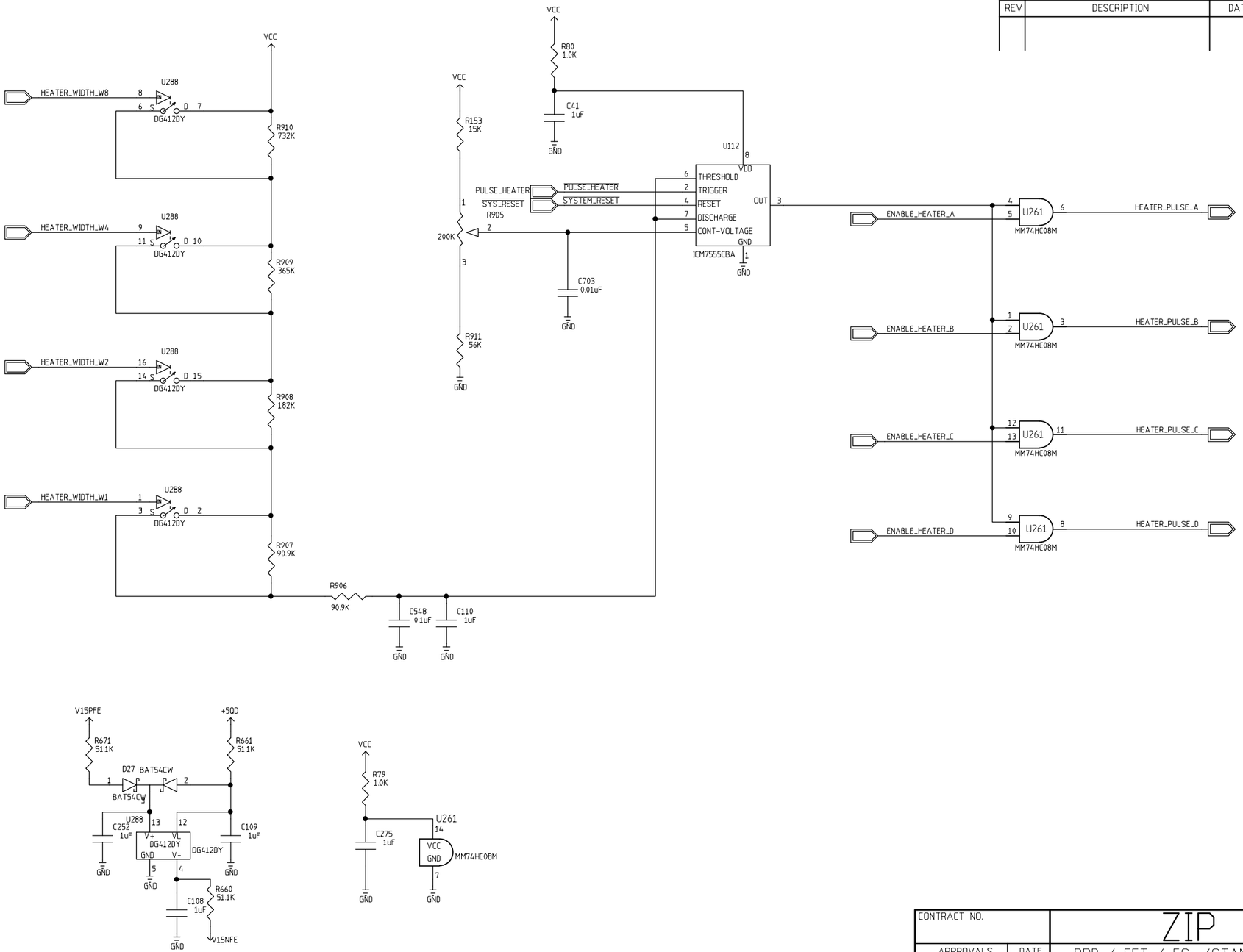

REVISIONS

REV	DESCRIPTION	DATE	APPROVED

CONTRACT NO.	ZIP	
APPROVALS / DATE	PPD / EET / ES (STANFORD 9U)	
DRAWN	QET BIAS	
CHECKED	SIZE C / FSCM NO. / DWG. NO.	REV
ISSUED	SCALE	SHEET 25 OF XX

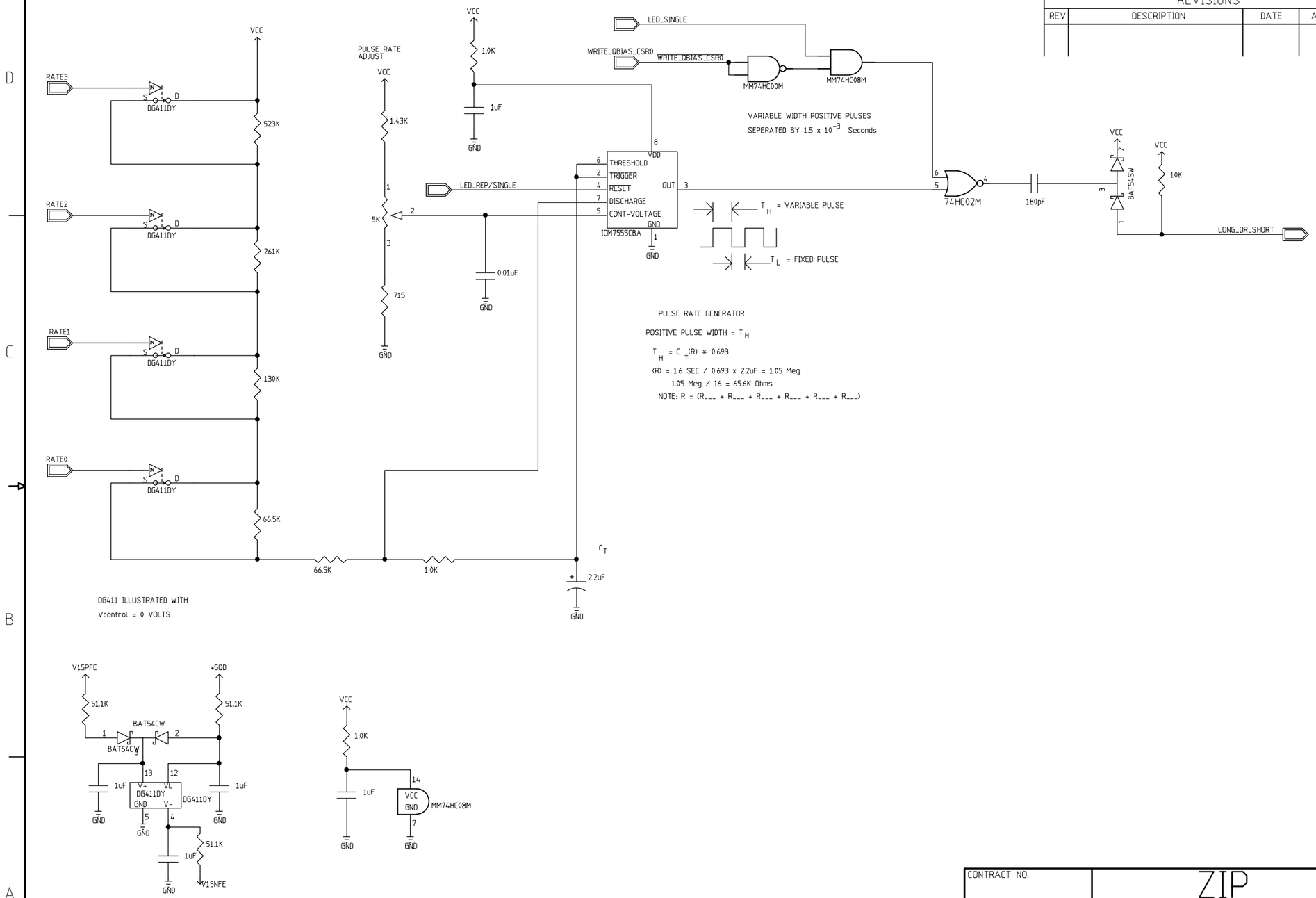

REVISIONS			
REV	DESCRIPTION	DATE	APPROVED

CONTRACT NO.		ZIP		
APPROVALS	DATE	PPD / EET / ES (STANFORD 9U) PULSE RATE GENERATOR		
DRAWN				
CHECKED		SIZE C	FSCM NO.	DWG. NO.	REV
ISSUED		SCALE		SHEET 27 OF XX

DWG. NO.
SH.
REV

DWG. NO.	SH.	REV

REVISIONS

REV	DESCRIPTION	DATE	APPROVED

QAMP INNER

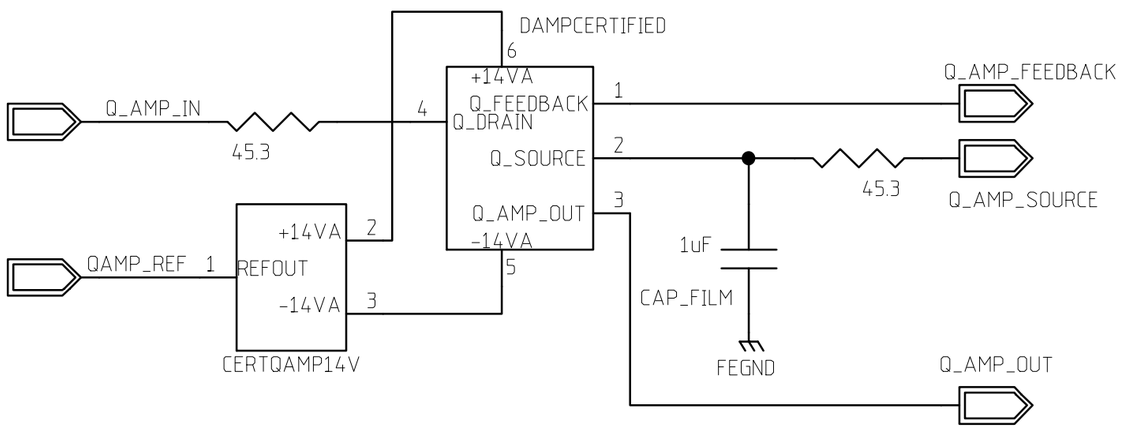

	NAME	DATE
ORIGINATOR	MERLE HALDEMAN	10/6/98
DRAWN	BRUCE MERKEL	10/6/98
CHECKED		
APPROVED		

FERMILAB PPD/ETT/ES CDMS (E-891)
ZIP MODULE
QAMP

SIZE	FSCM NO.	DWG. NO.	REV
A			

SCALE		SHEET

DWG. NO.	SH.	REV

REVISIONS

REV	DESCRIPTION	DATE	APPROVED

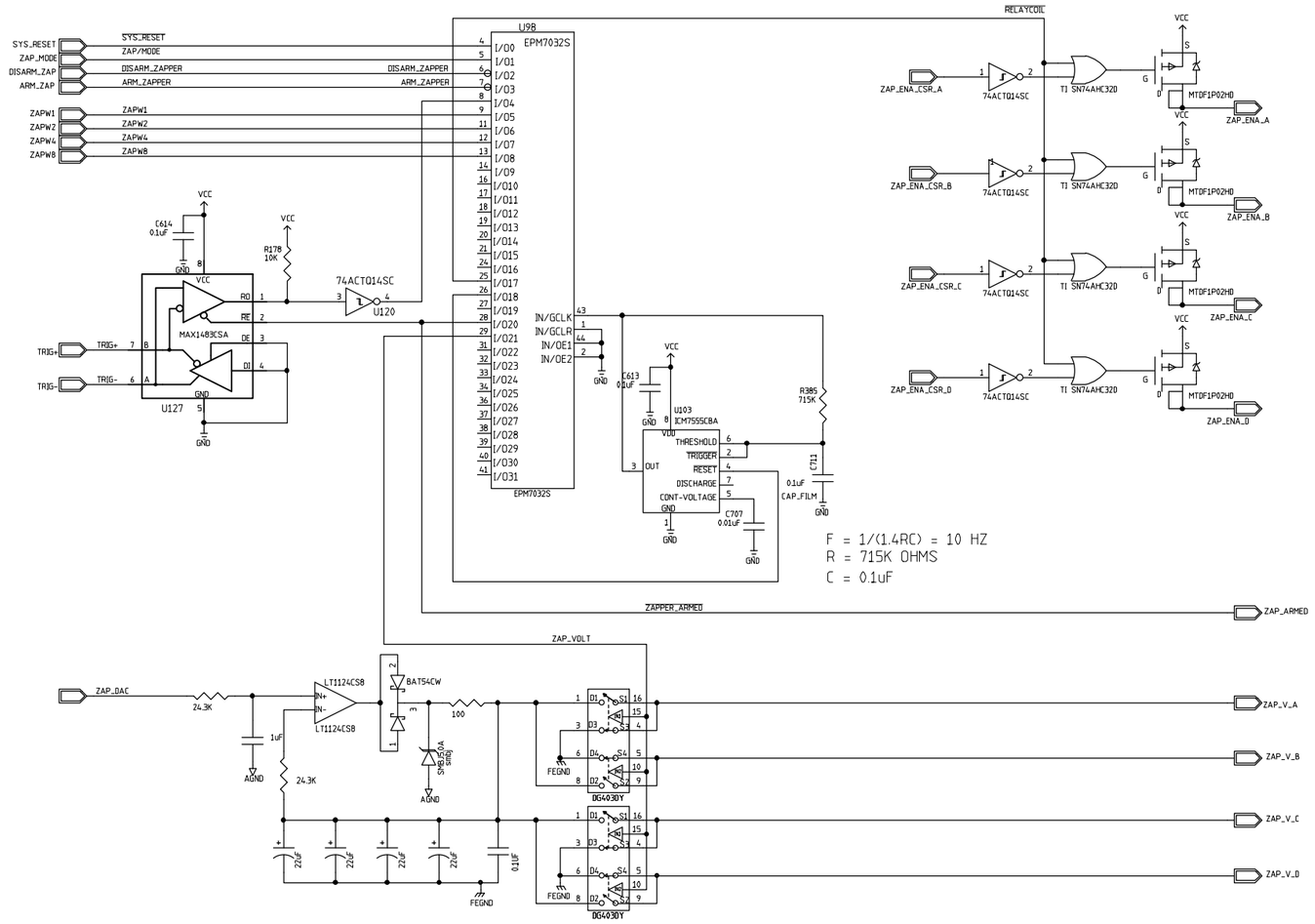

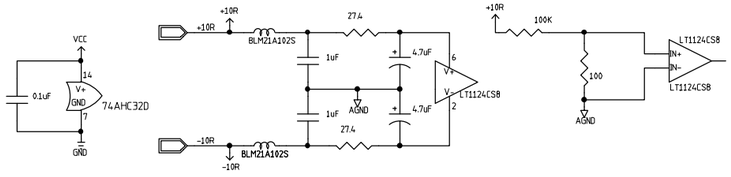

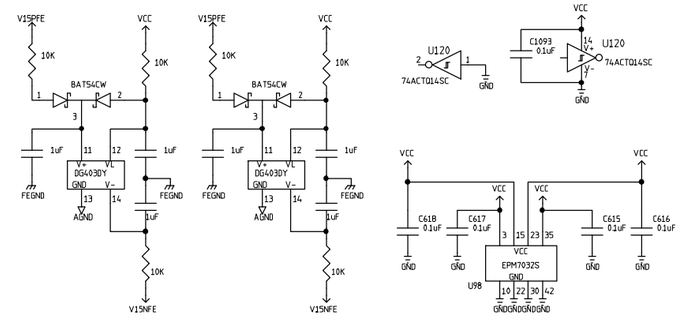

	NAME	DATE
ORIGINATOR	MERLE HALDEMAN	10/6/98
DRAWN	BRUCE MERKEL	10/13/98
CHECKED		
APPROVED		

FERMILAB PPD/ETT/ES CDMS (E-891)
ZIP MODULE
SQUID ZAP CONTROL

SIZE	FSCM NO.	DWG. NO.	REV
D			
SCALE		SHEET	

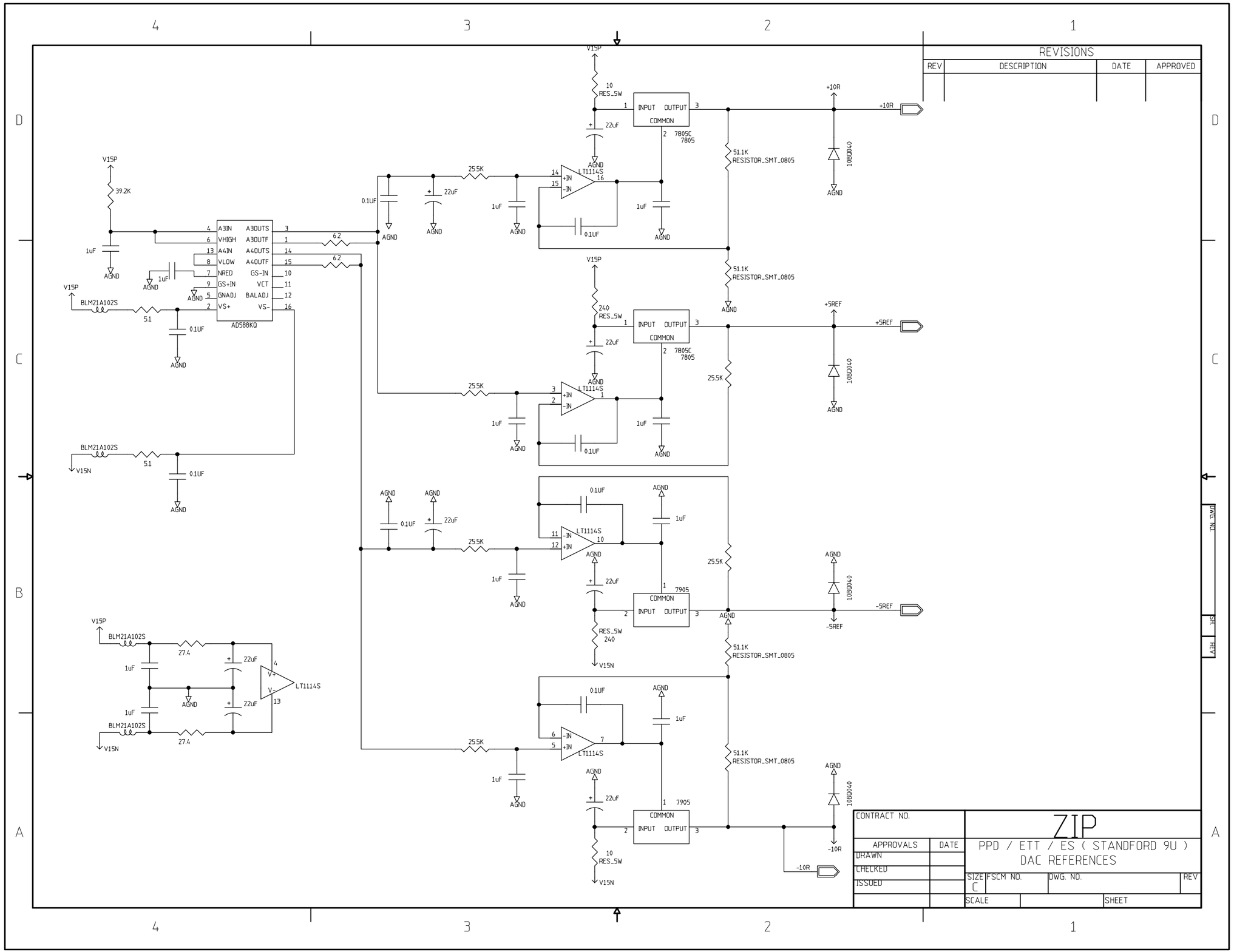

REVISIONS			
REV	DESCRIPTION	DATE	APPROVED

CONTRACT NO.		ZIP		
APPROVALS	DATE	PPD / ETT / ES (STANDFORD 9U) DAC REFERENCES		
DRAWN				
CHECKED		SIZE C	FSCM NO.	DWG. NO.	REV
ISSUED		SCALE		SHEET

DWG. NO.	SH.	REV

REVISIONS

REV	DESCRIPTION	DATE	APPROVED

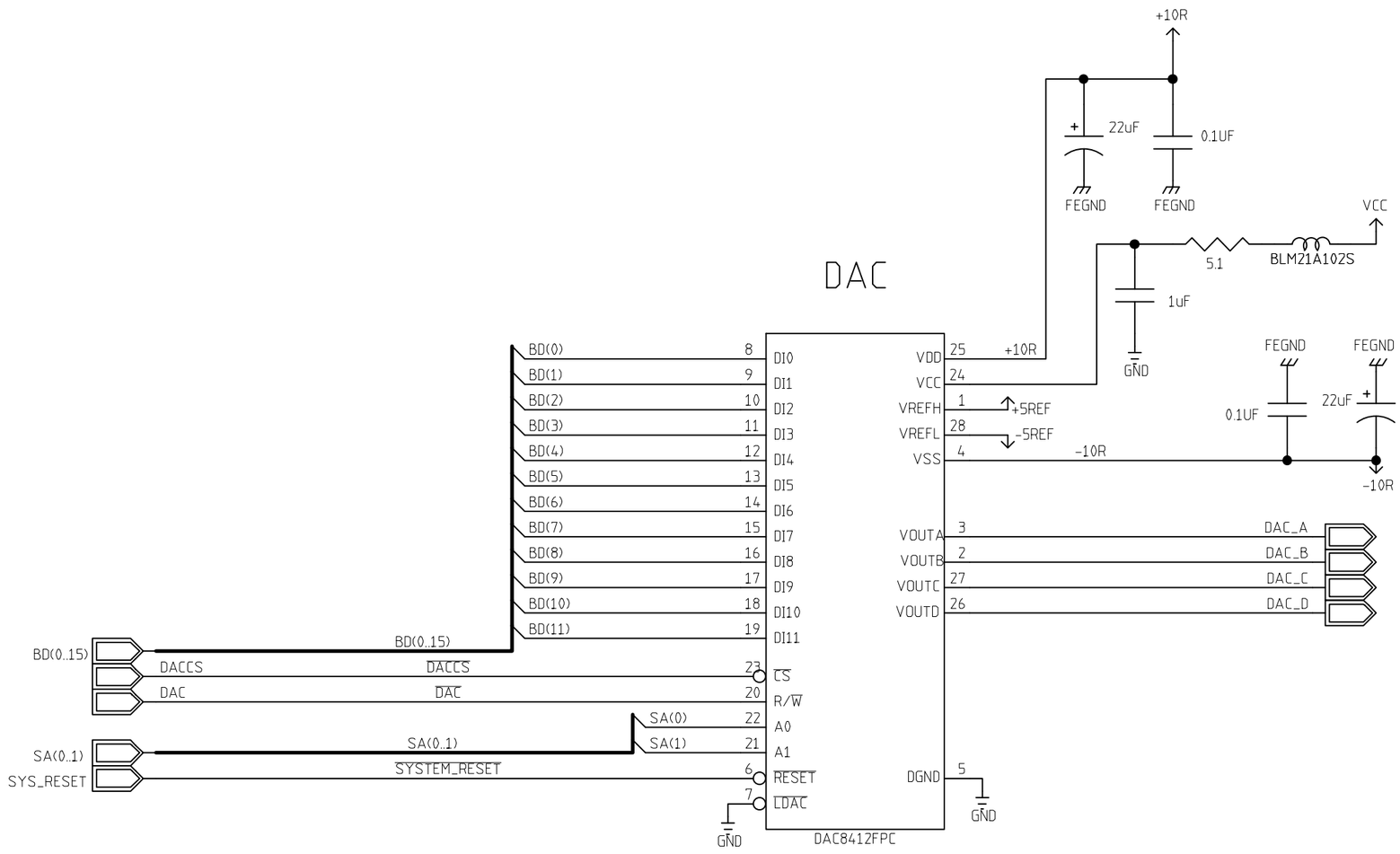

CONTRACT NO.		ZIP			
APPROVALS	DATE	PPD / ETT / ES (STANDFORD 9U)			
DRAWN		DAC'S			
CHECKED		SIZE B	FSCM NO.	DWG. NO.	REV
ISSUED		SCALE		SHEET	

DWG. NO.	SH.	REV

REVISIONS

REV	DESCRIPTION	DATE	APPROVED

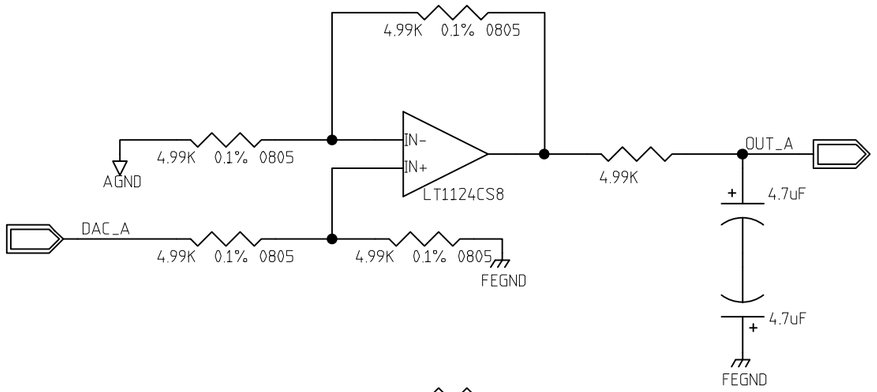

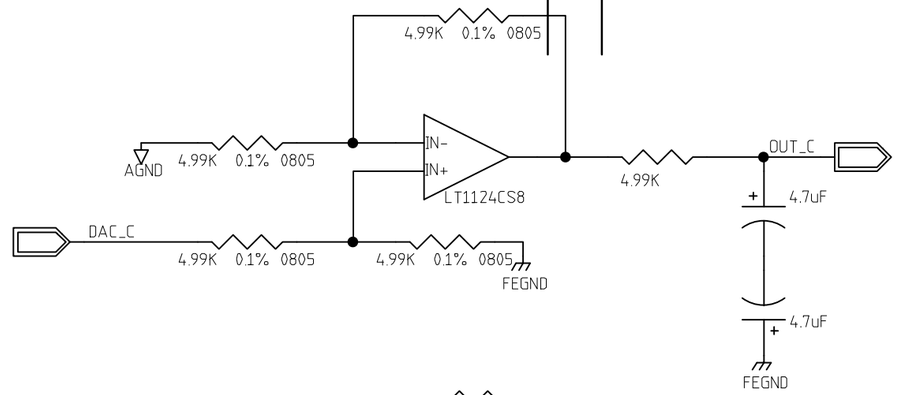

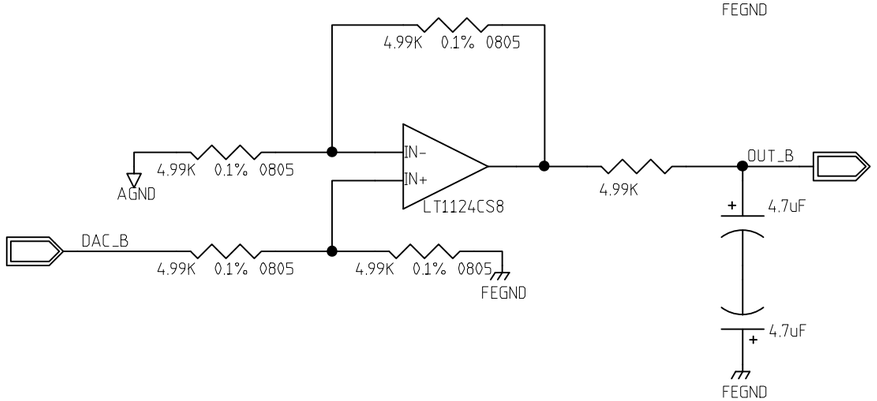

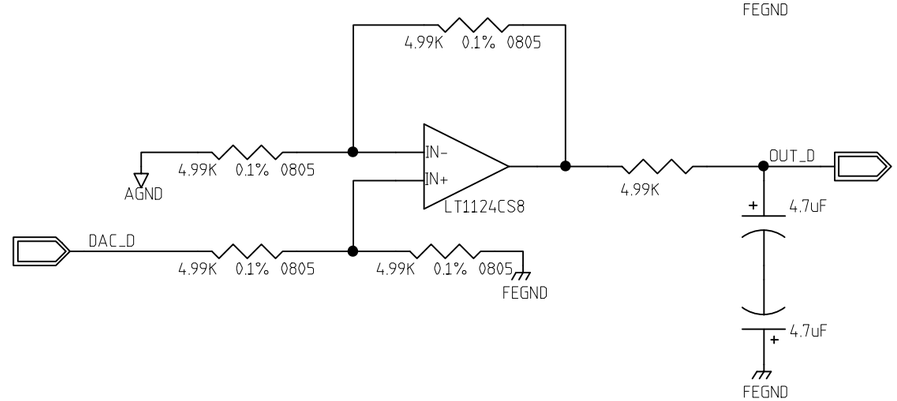

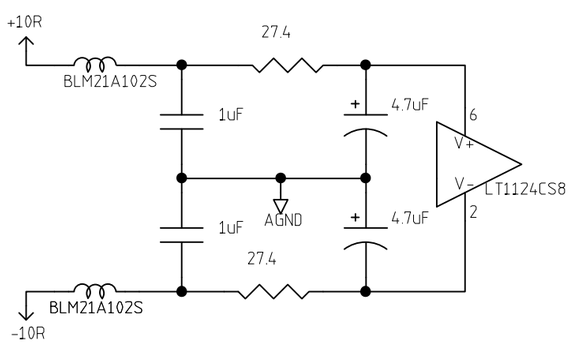

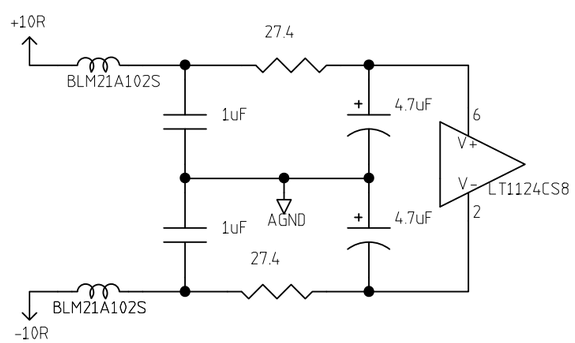

CONTRACT NO.		ZIP			
APPROVALS	DATE	PPD / ETT / ES (STANDFORD 9U) NON-INVERTING BUFFERS			
DRAWN					
CHECKED		SIZE B	FSCM NO.	DWG. NO.	REV
ISSUED					
		SCALE		SHEET	

DWG. NO.	SH.	REV

REVISIONS

REV	DESCRIPTION	DATE	APPROVED

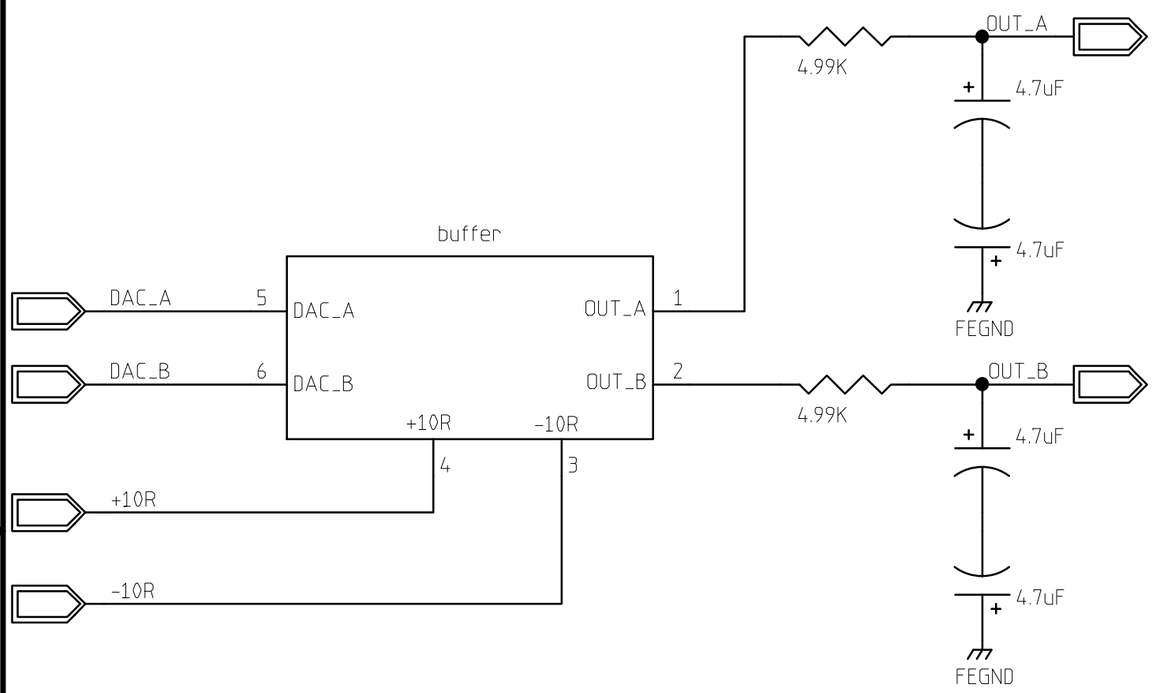

	NAME	DATE
ORIGINATOR	MERLE HALDEMAN	10/7/98
DRAWN	BRUCE MERKEL	10/14/98
CHECKED		
APPROVED		

FERMILAB PPD/ETT/ES CDMS (E-891)
ZIP MODULE
QET BUFFERS

SIZE	FSCM NO.	DWG. NO.	REV
A			

SCALE		SHEET

DWG. NO.	SH.	REV

REVISIONS			
REV	DESCRIPTION	DATE	APPROVED

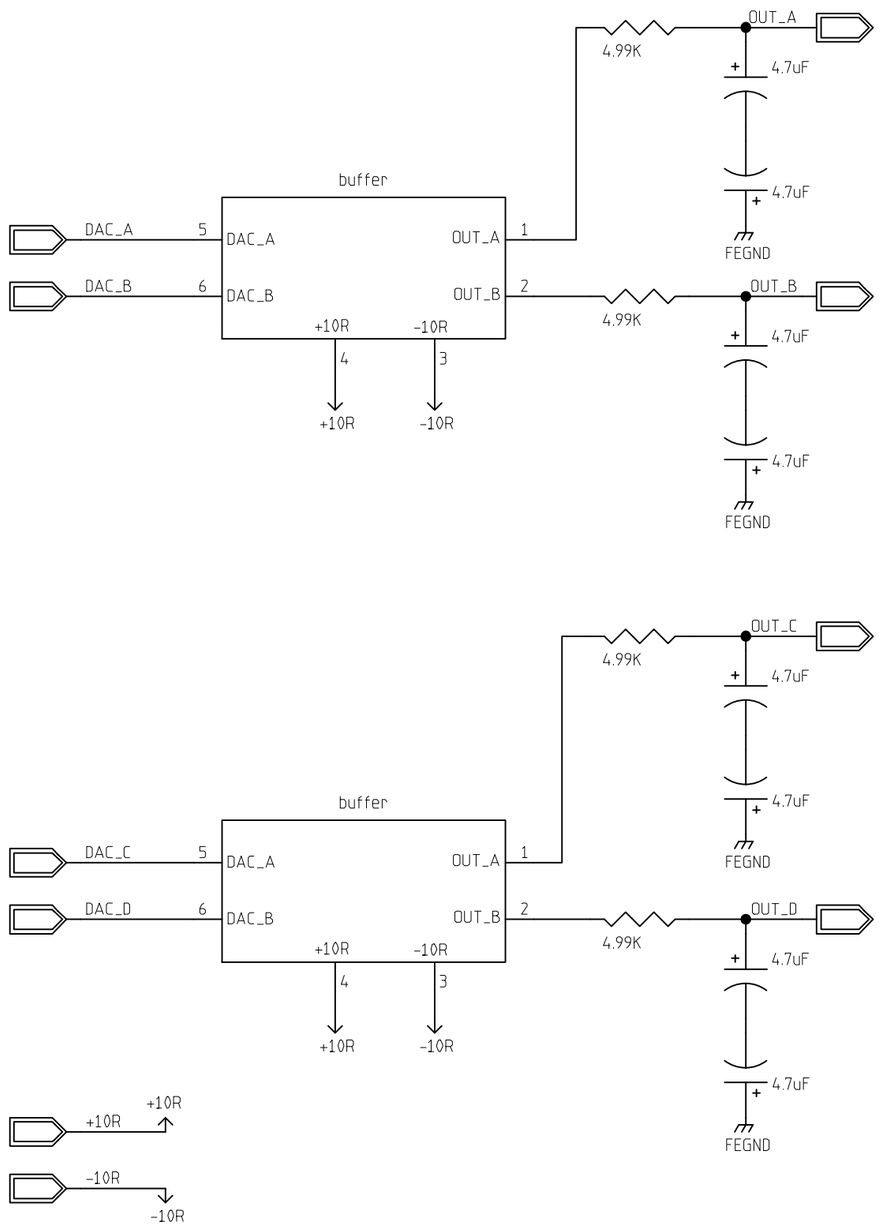

	NAME	DATE
ORIGINATOR	MERLE HALDEMAN	10/7/98
DRAWN	BRUCE MERKEL	10/14/98
CHECKED		
APPROVED		

FERMILAB PPD/ETT/ES CDMS (E-891)
ZIP MODULE
DUAL INVERTING BUFFERS

SIZE	FSCM NO.	DWG. NO.	REV
B			

SCALE		SHEET

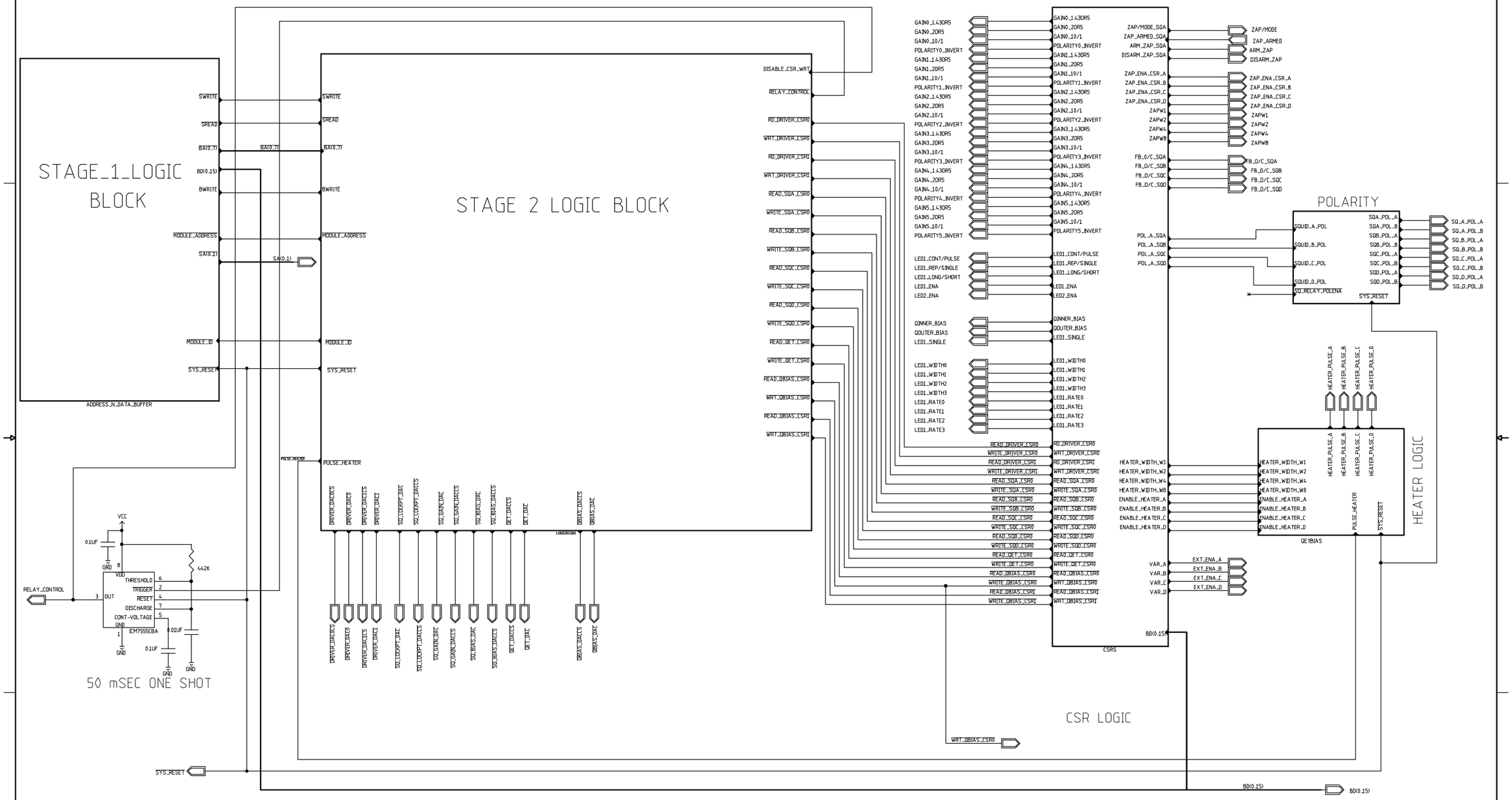

REVISIONS			
REV	DESCRIPTION	DATE	APPROVED

CONTRACT NO.		ZIP
APPROVALS	DATE	PPD / ETT / ES (STANDFORD 9U)
DRAWN		LOGIC BLOCK DIAGRAM
CHECKED		
ISSUED		SIZE D / FSCM NO. / DWG. NO. / REV
		SCALE / SHEET

DWG. NO.	SH.	REV

REVISIONS			
REV	DESCRIPTION	DATE	APPROVED

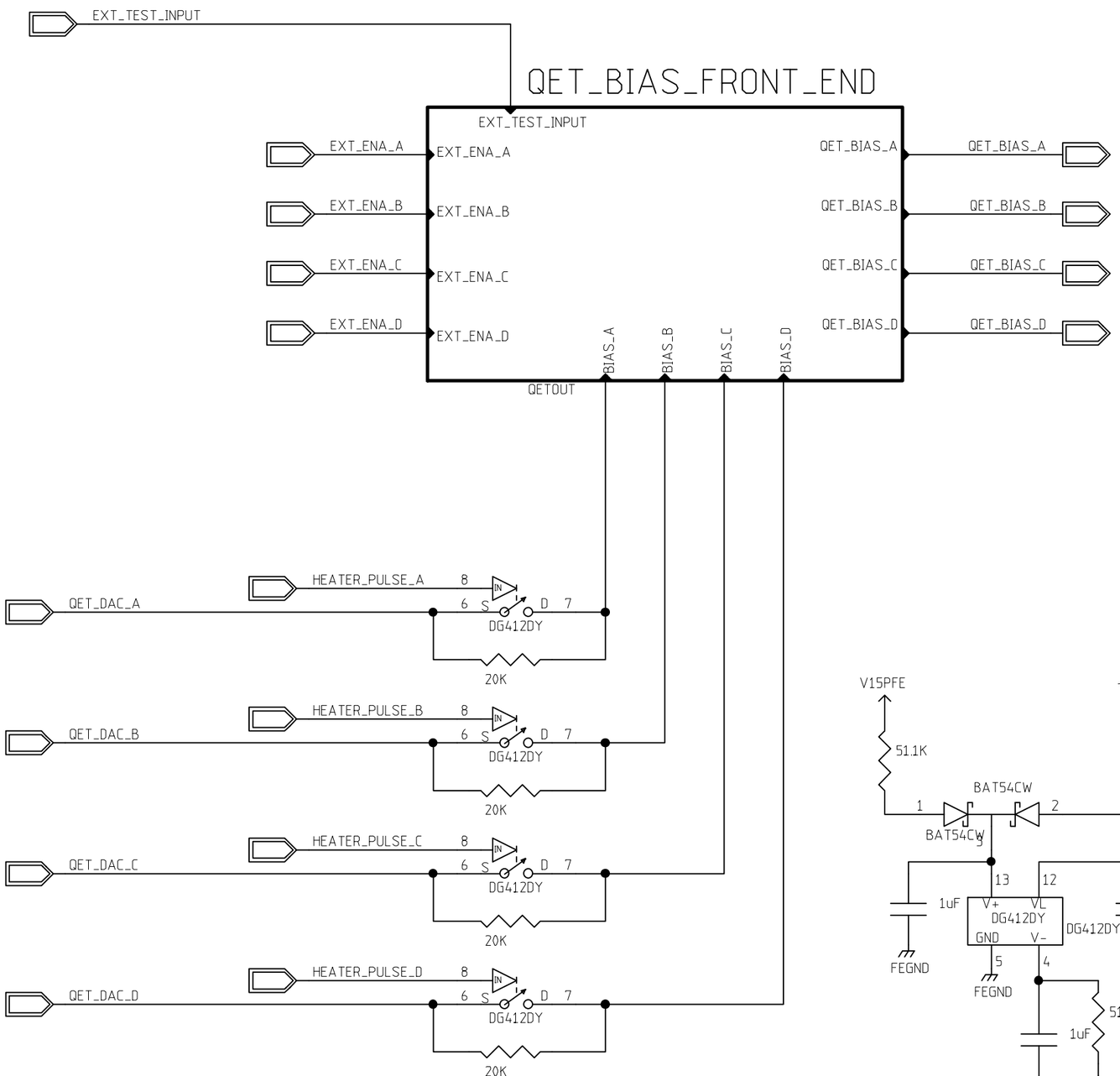

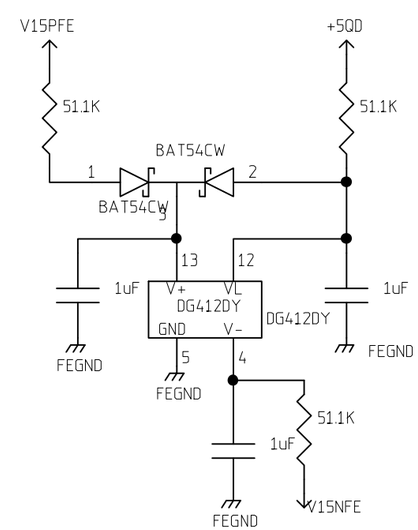

	NAME	DATE
ORIGINATOR	MERLE HALDEMAN	10/9/98
DRAWN	BRUCE MERKEL	10/9/98
CHECKED		
APPROVED		

FERMILAB PPD/ETT/ES CDMS (E-891)
ZIP MODULE
QET BLOCK DIAGRAM

SIZE	FSCM NO.	DWG. NO.	REV
B			

SCALE		SHEET

REVISIONS			
REV	DESCRIPTION	DATE	APPROVED

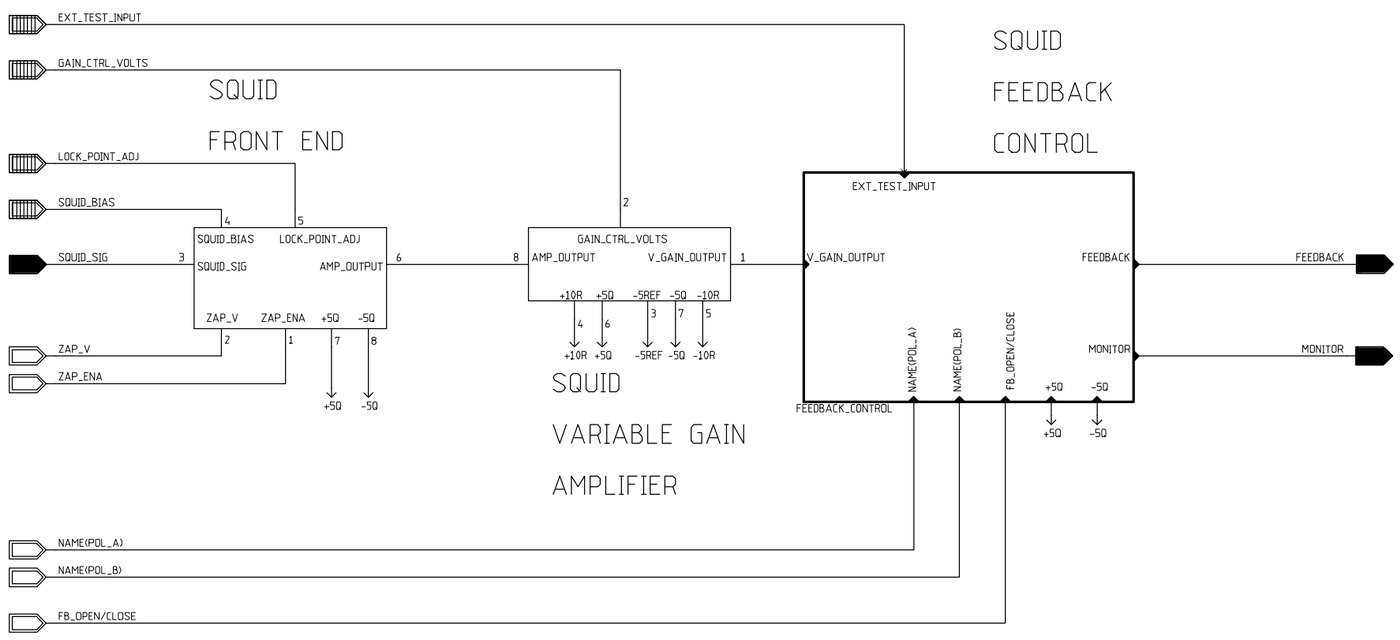

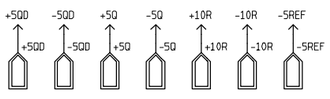

	NAME	DATE
ORIGINATOR	MERLE HALDEMAN	10/2/98
DRAWN	BRUCE MERKEL	10/19/98
CHECKED		
APPROVED		

FERMILAB PPD/ETT/ES CDMS (E-891)
ZIP MODULE
SQUID BLOCK DIAGRAM

SIZE	FSCM NO.	DWG. NO.	REV
C			
SCALE		SHEET	

DWG. NO.
SH.
REV

DWG. NO.	SH.	REV

REVISIONS

REV	DESCRIPTION	DATE	APPROVED

MONENTARY PUSH BUTTON
FRONT PANEL MOUNT SWITCH

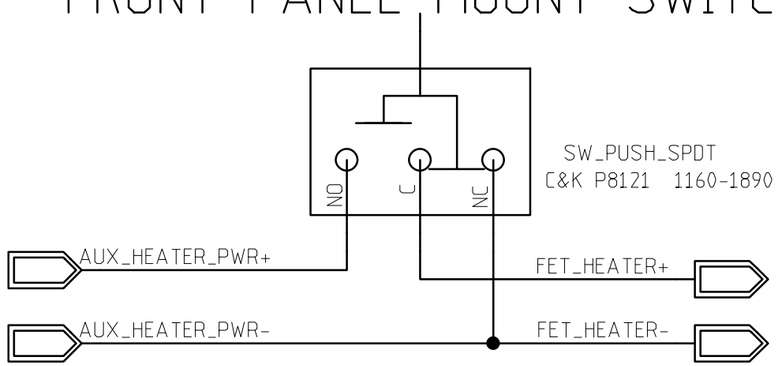

FETTEMP

	NAME	DATE
ORIGINATOR	MERLE HALDEMAN	10/9/98
DRAWN	BRUCE MERKEL	10/9/98
CHECKED		
APPROVED		

FERMILAB PPD/EET/ES CDMS (E-891)
ZIP MODULE
FETTEMP

SIZE	FSCM NO.	DWG. NO.	REV
A			

SCALE		SHEET

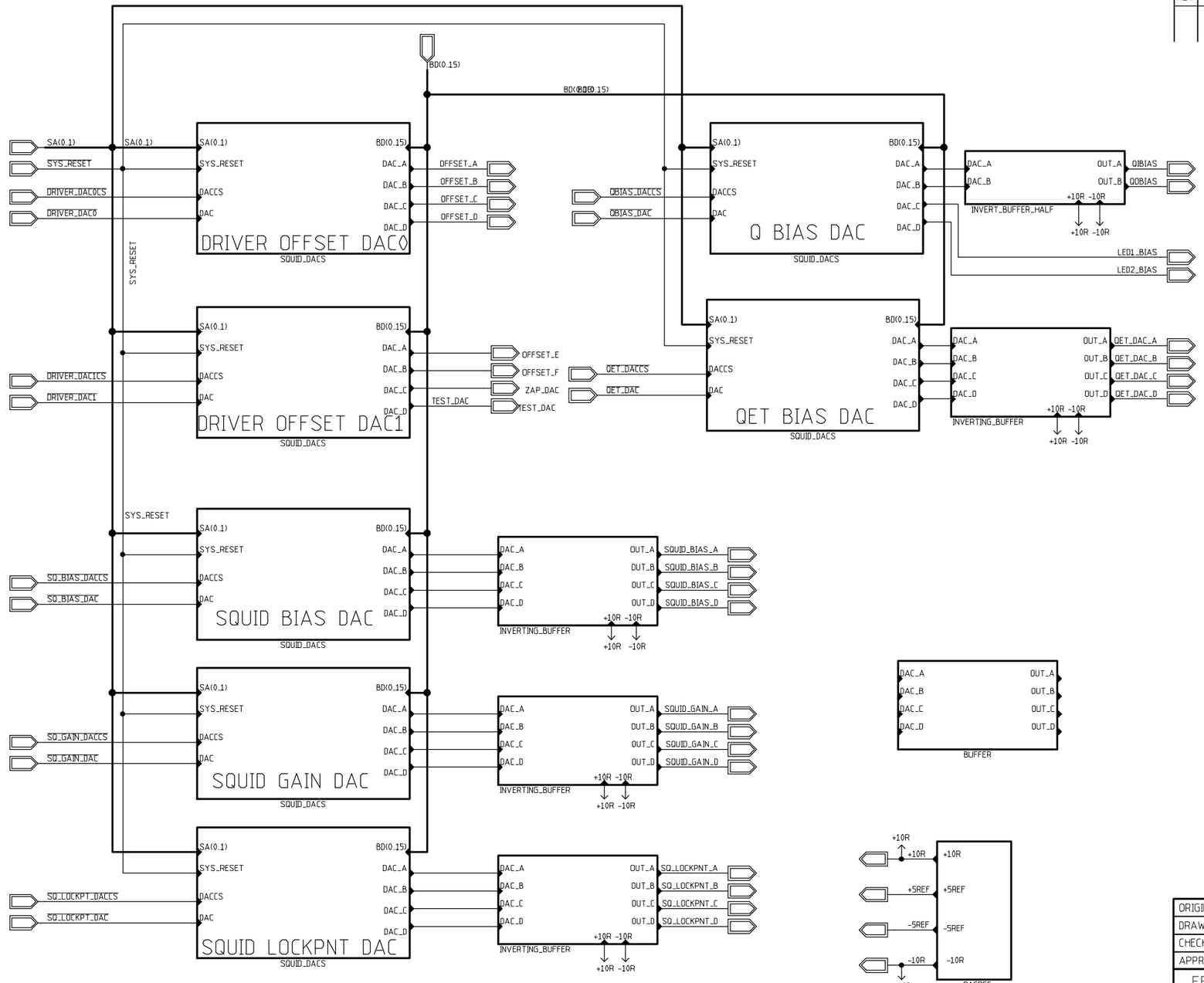

REVISIONS			
REV	DESCRIPTION	DATE	APPROVED

	NAME	DATE
ORIGINATOR	MERLE HALDEMAN	10/7/98
DRAWN	BRUCE MERKEL	10/14/98
CHECKED		
APPROVED		

FERMILAB PPD/ETT/ES CDMS (E-891)
ZIP MODULE
DAC AND BUFFERS

SIZE	FSCM NO.	DWG. NO.	REV
C			
SCALE		SHEET	

REVISIONS			
REV	DESCRIPTION	DATE	APPROVED

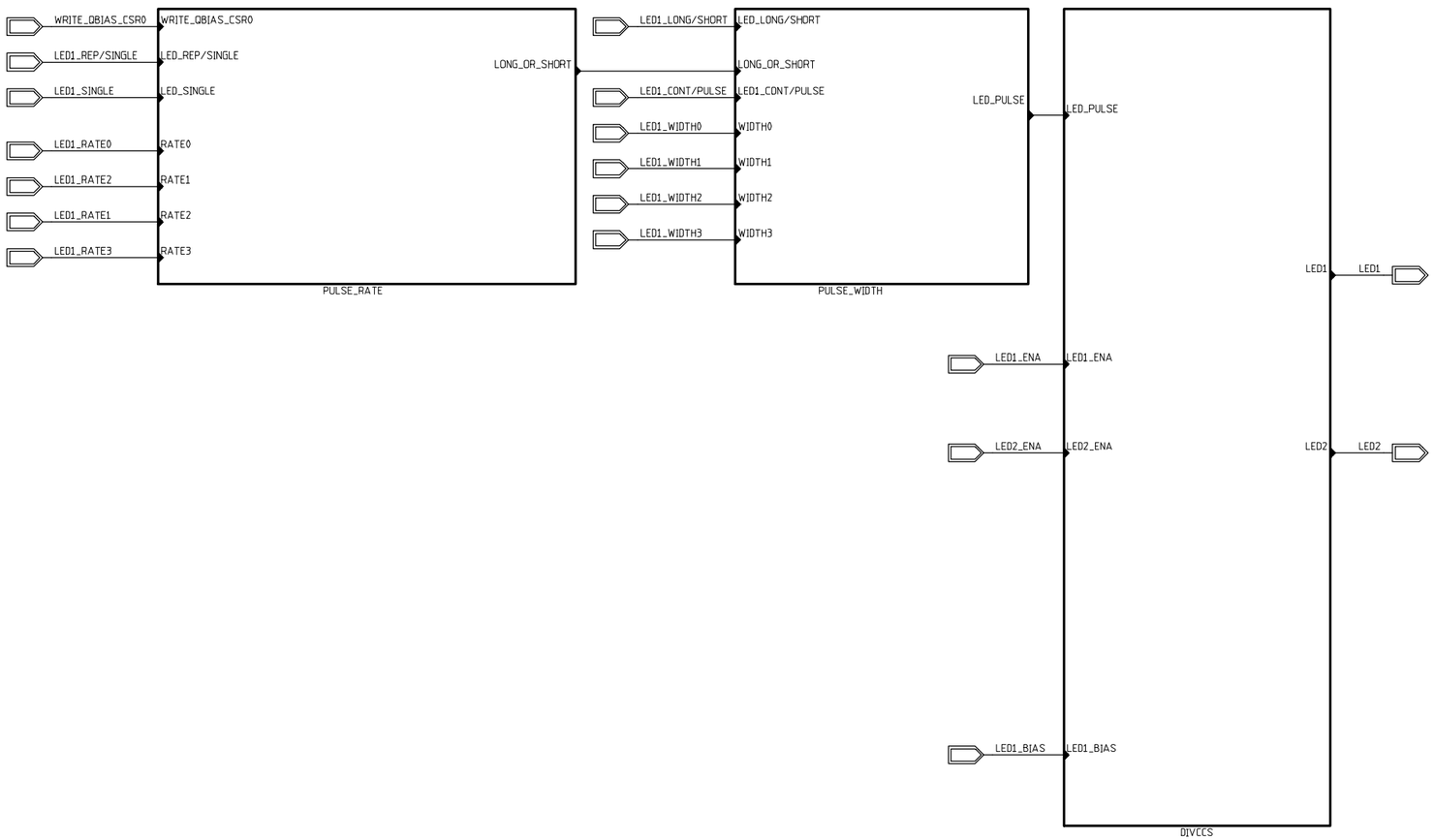

	NAME	DATE
ORIGINATOR	MERLE HALDEMAN	10/13/98
DRAWN	BRUCE MERKEL	10/13/98
CHECKED		
APPROVED		

FERMILAB PPD/ETT/ES CDMS (E-891)
ZIP MODULE
LED DRIVER

SIZE	FSCM NO.	DWG. NO.	REV
C			
SCALE		SHEET	

DWG. NO.	SH.	REV

REVISIONS

REV	DESCRIPTION	DATE	APPROVED

P4
(96 PIN CONNECTOR)

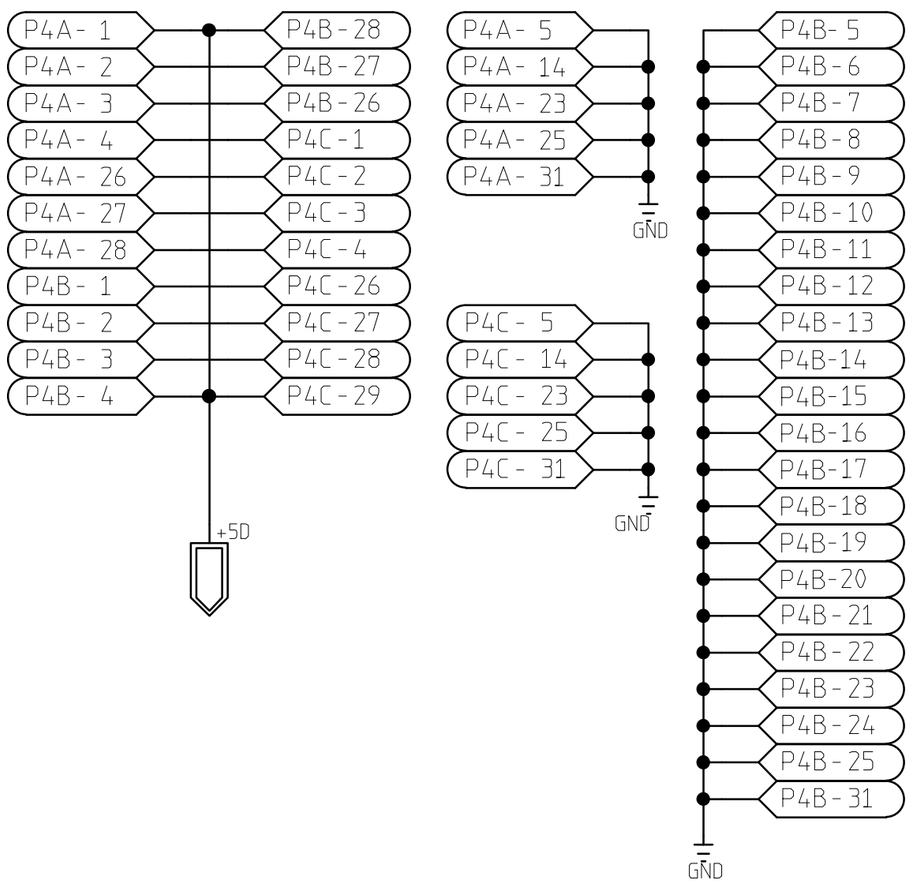

	NAME	DATE
ORIGINATOR	MERLE HALDEMAN	10/8/98
DRAWN	BRUCE MERKEL	10/8/98
CHECKED		
APPROVED		

FERMILAB PPD/ETT/ES CDMS (E-891)
ZIP MODULE
P4 BACKPLANE POWER CONNECTION

SIZE	FSCM NO.	DWG. NO.	REV
A			

SCALE		SHEET

DWG. NO.	SH.	REV

REVISIONS

REV	DESCRIPTION	DATE	APPROVED

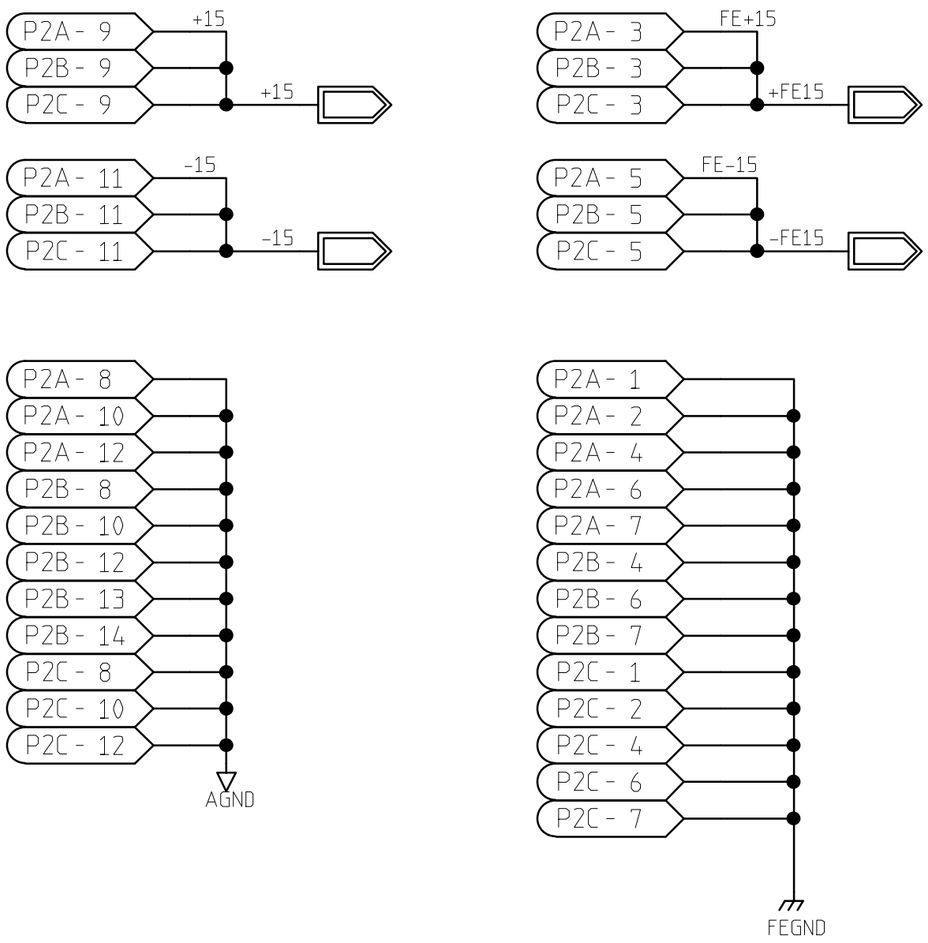

	NAME	DATE
ORIGINATOR	MERLE HALDEMAN	10/8/98
DRAWN	BRUCE MERKEL	10/8/98
CHECKED		
APPROVED		

FERMILAB PPD/ETT/ES CDMS (E-891)
ZIP MODULE
P2 BACKPLANE POWER CONNECTION

SIZE	FSCM NO.	DWG. NO.	REV
A			

SCALE		SHEET

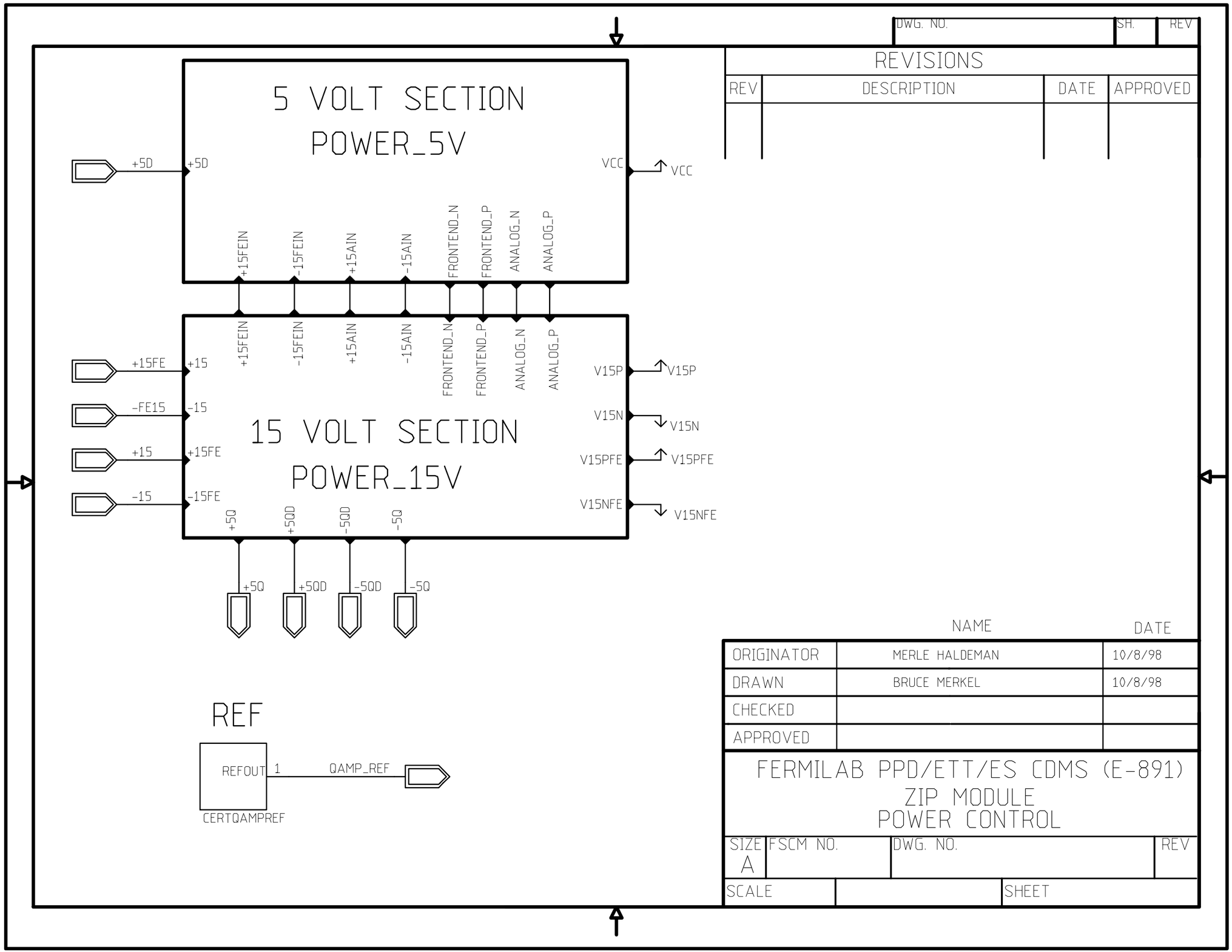

DWG. NO.	SH.	REV

REVISIONS

REV	DESCRIPTION	DATE	APPROVED

	NAME	DATE
ORIGINATOR	MERLE HALDEMAN	10/8/98
DRAWN	BRUCE MERKEL	10/8/98
CHECKED		
APPROVED		

FERMILAB PPD/ETT/ES CDMS (E-891)
ZIP MODULE
POWER CONTROL

SIZE	FSCM NO.	DWG. NO.	REV
A			

SCALE		SHEET

DWG. NO.	SH.	REV

REVISIONS

REV	DESCRIPTION	DATE	APPROVED

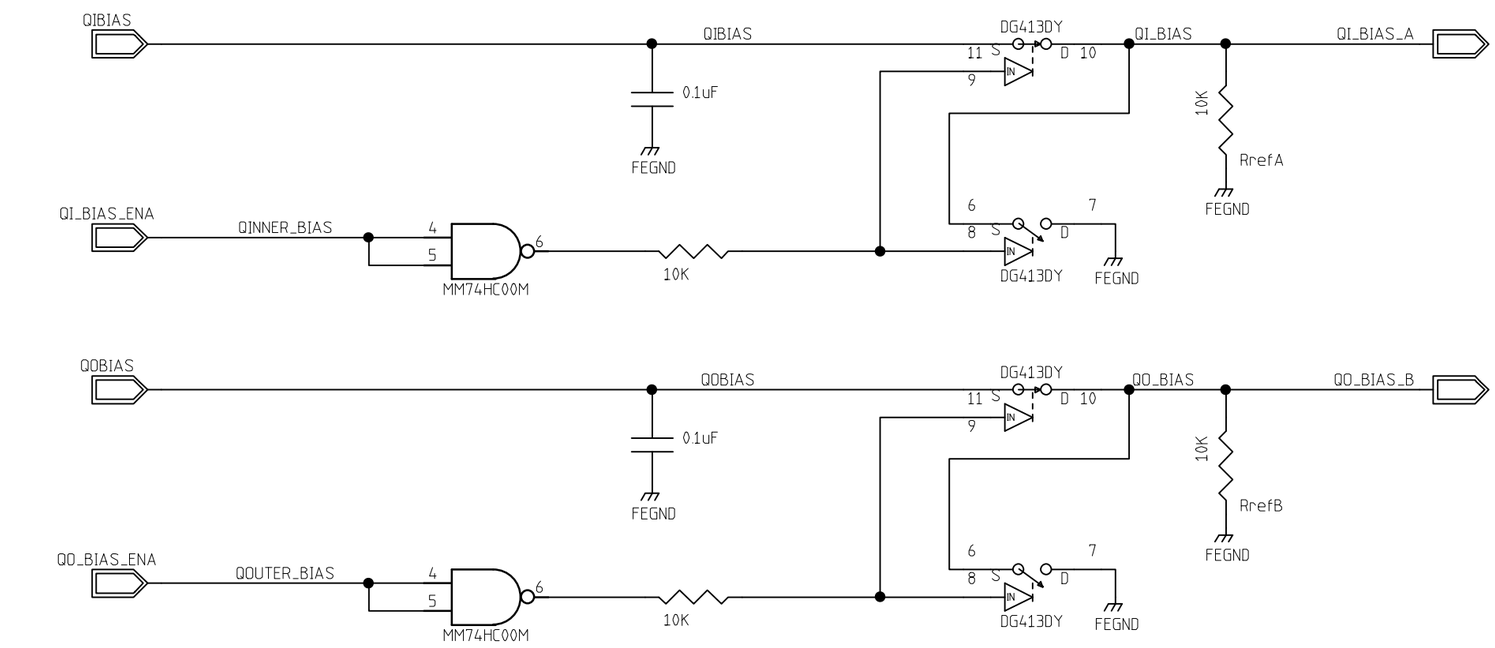

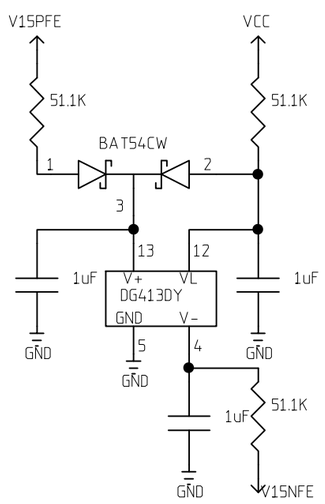

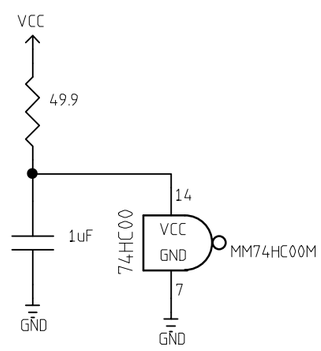

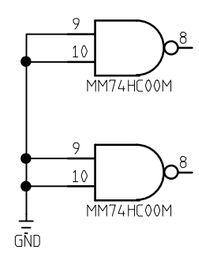

RrefA & RrefB	QI BIAS & QO BIAS
OPEN	+/- 5 V
3.48K	+/- 2 V
1K	+/- 0.833 V
10K	+/- 3.33 V

	NAME	DATE
ORIGINATOR	MERLE HALDEMAN	10/6/98
DRAWN	BRUCE MERKEL	10/6/98
CHECKED		
APPROVED		

FERMILAB PPD/ETT/ES CDMS (E-891)
ZIP MODULE
QBIAS FRONT END

SIZE	FSCM NO.	DWG. NO.	REV
B			
SCALE		SHEET	

DWG. NO.	SH.	REV

REVISIONS

REV	DESCRIPTION	DATE	APPROVED

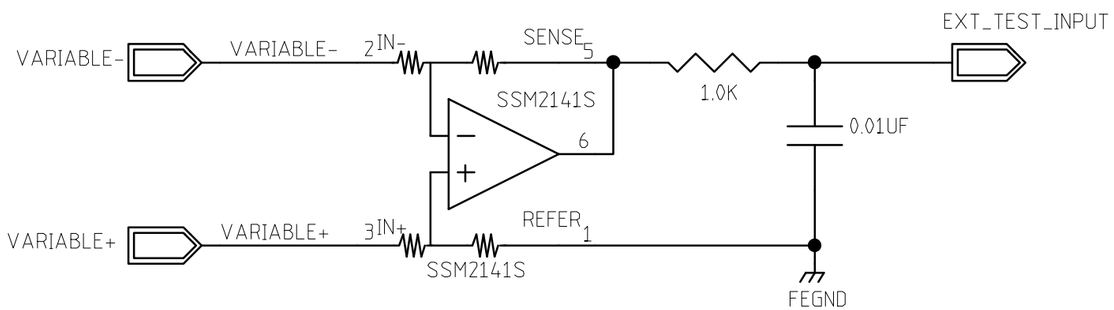

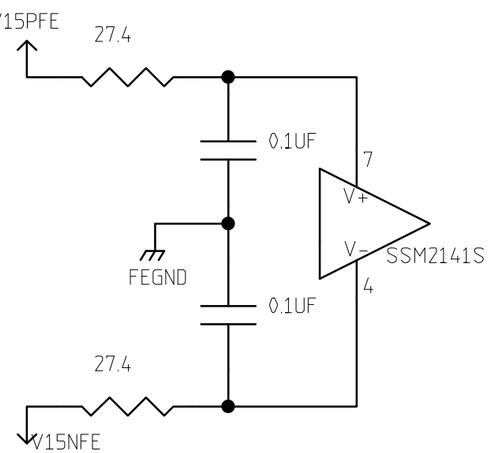

	NAME	DATE
ORIGINATOR	MERLE HALDEMAN	10/9/98
DRAWN	BRUCE MERKEL	10/9/98
CHECKED		
APPROVED		

FERMILAB PPD/ETT/ES CDMS (E-891)
ZIP MODULE
EXTERNAL TEST RECIVER

SIZE	FSCM NO.	DWG. NO.	REV
A			

SCALE		SHEET

DWG. NO.	SH.	REV

REVISIONS

REV	DESCRIPTION	DATE	APPROVED

50 PIN D CONNECTOR

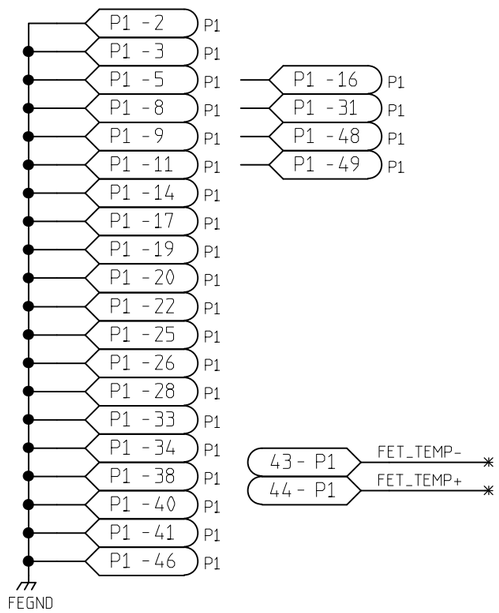

25 PIN D TYPE CONNECTOR

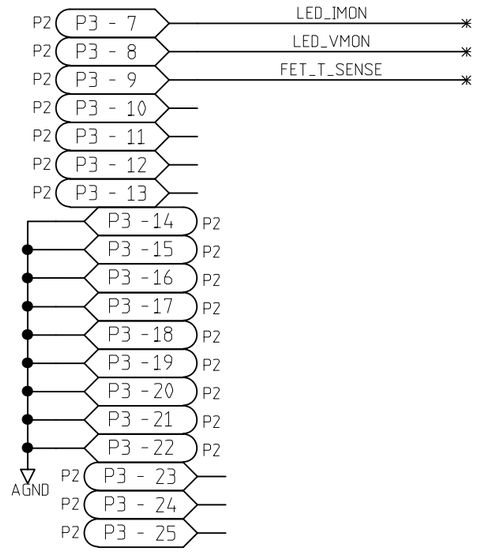

48 PIN VME CONNECTOR

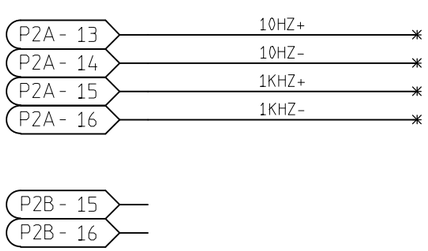

96 PIN VME CONNECTOR

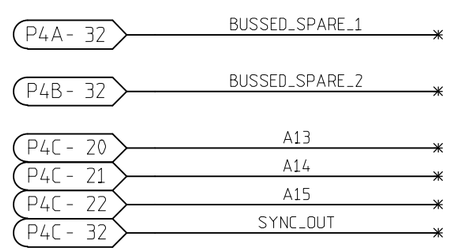

SYMBOL LEDGEND

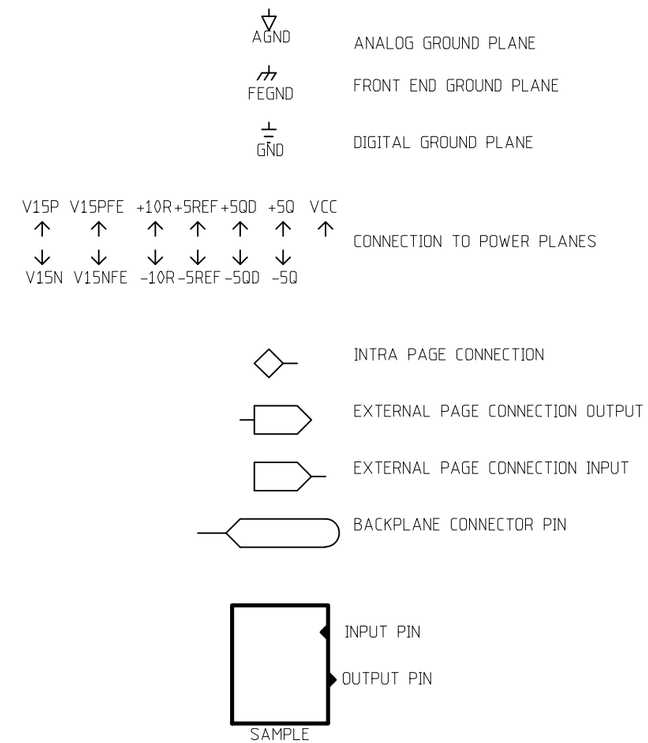

	NAME	DATE
ORIGINATOR	MERLE HALDEMAN	10/8/98
DRAWN	BRUCE MERKEL	10/13/98
CHECKED		
APPROVED		

FERMILAB PPD/ETT/ES CDMS (E-891)
ZIP MODULE
MISC

SIZE	FSCM NO.	DWG. NO.	REV
B			

SCALE		SHEET

DWG. NO.	SH.	REV

REVISIONS

REV	DESCRIPTION	DATE	APPROVED

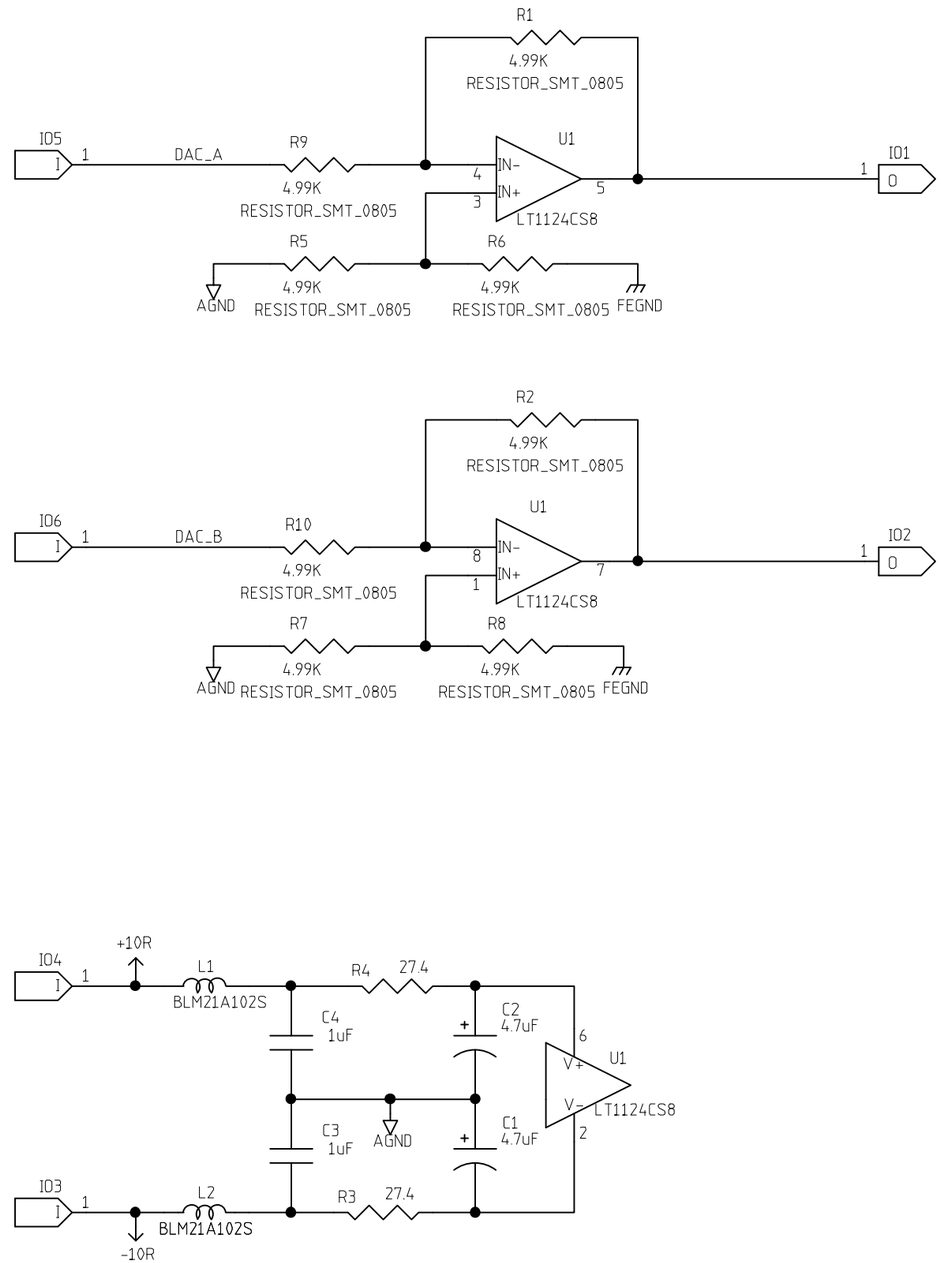

	NAME	DATE
ORIGINATOR	MERLE HALDEMAN	10/12/98
DRAWN	BRUCE MERKEL	10/14/98
CHECKED		
APPROVED		

FERMILAB PPD/ETT/ES CDMS (E-891)
ZIP MODULE
INVERTING BUFFERS

SIZE	FSCM NO.	DWG. NO.	REV
B			

SCALE		SHEET

DWG. NO.	SH.	REV

REVISIONS

REV	DESCRIPTION	DATE	APPROVED

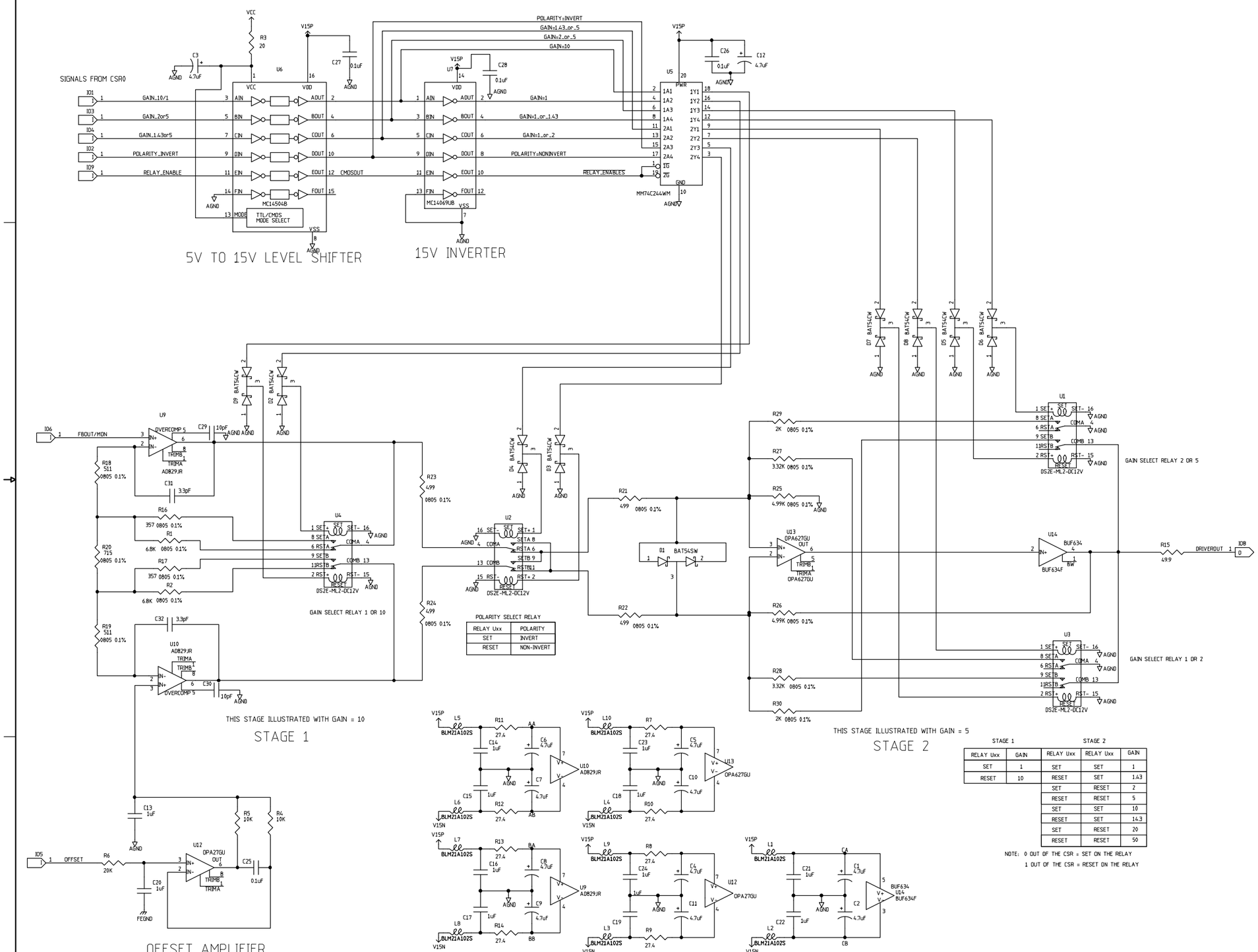

POLARITY SELECT RELAY

RELAY Uxx	POLARITY
SET	INVERT
RESET	NON-INVERT

STAGE 1		STAGE 2		
RELAY Uxx	GAIN	RELAY Uxx	RELAY Uxx	GAIN
SET	1	SET	SET	1
RESET	10	RESET	SET	143
		SET	RESET	2
		RESET	RESET	5
		SET	SET	10
		RESET	SET	143
		SET	RESET	20
		RESET	RESET	50

NOTE: 0 OUT OF THE CSR = SET ON THE RELAY
1 OUT OF THE CSR = RESET ON THE RELAY

	NAME	DATE
ORIGINATOR	MERLE HALDEMAN	10/13/98
DRAWN	BRUCE MERKEL	10/13/98
CHECKED		
APPROVED		

FERMILAB PPD/EET/ES CDMS (E-891)
ZIP MODULE
DRIVER

SIZE	FSCM NO.	DWG. NO.	REV
D			
SCALE		SHEET	

QAMP

DWG. NO.	SH.	REV

REVISIONS

REV	DESCRIPTION	DATE	APPROVED

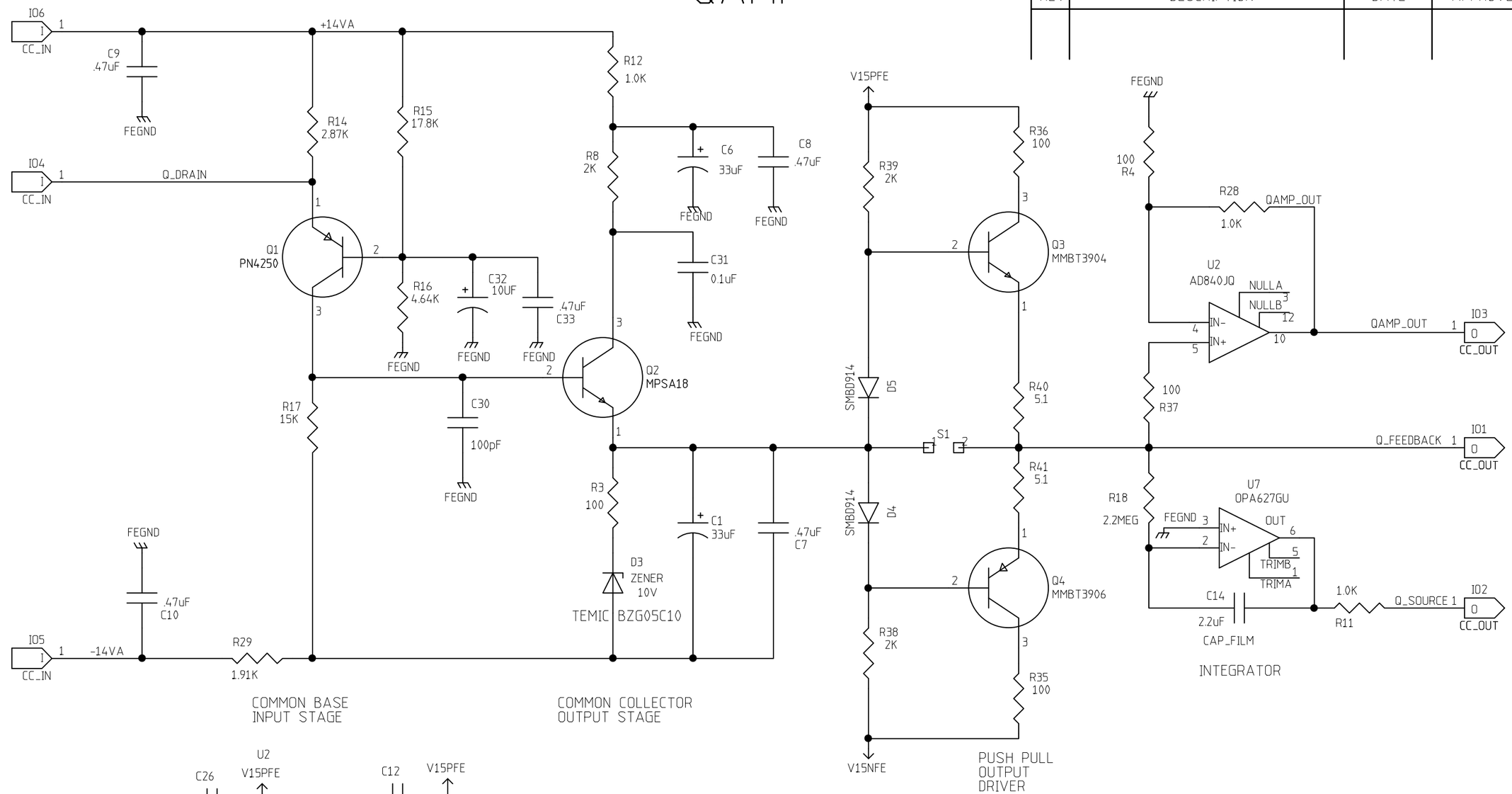

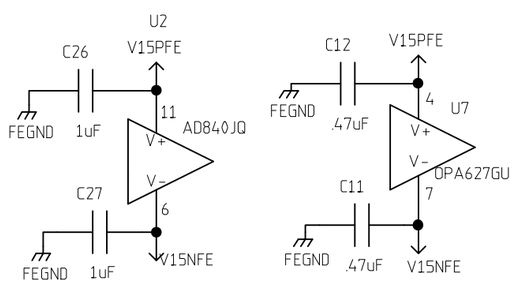

CONTRACT NO.		ZIP		
APPROVALS	DATE	PPD / ETT / ES (STANDFORD 9U) DISCRETE Q AMPLIFIER		
DRAWN				
CHECKED		SIZE B	FSCM NO.	DWG. NO.	REV
ISSUED				
		SCALE		SHEET

DWG. NO.	SH.	REV

REVISIONS

REV	DESCRIPTION	DATE	APPROVED

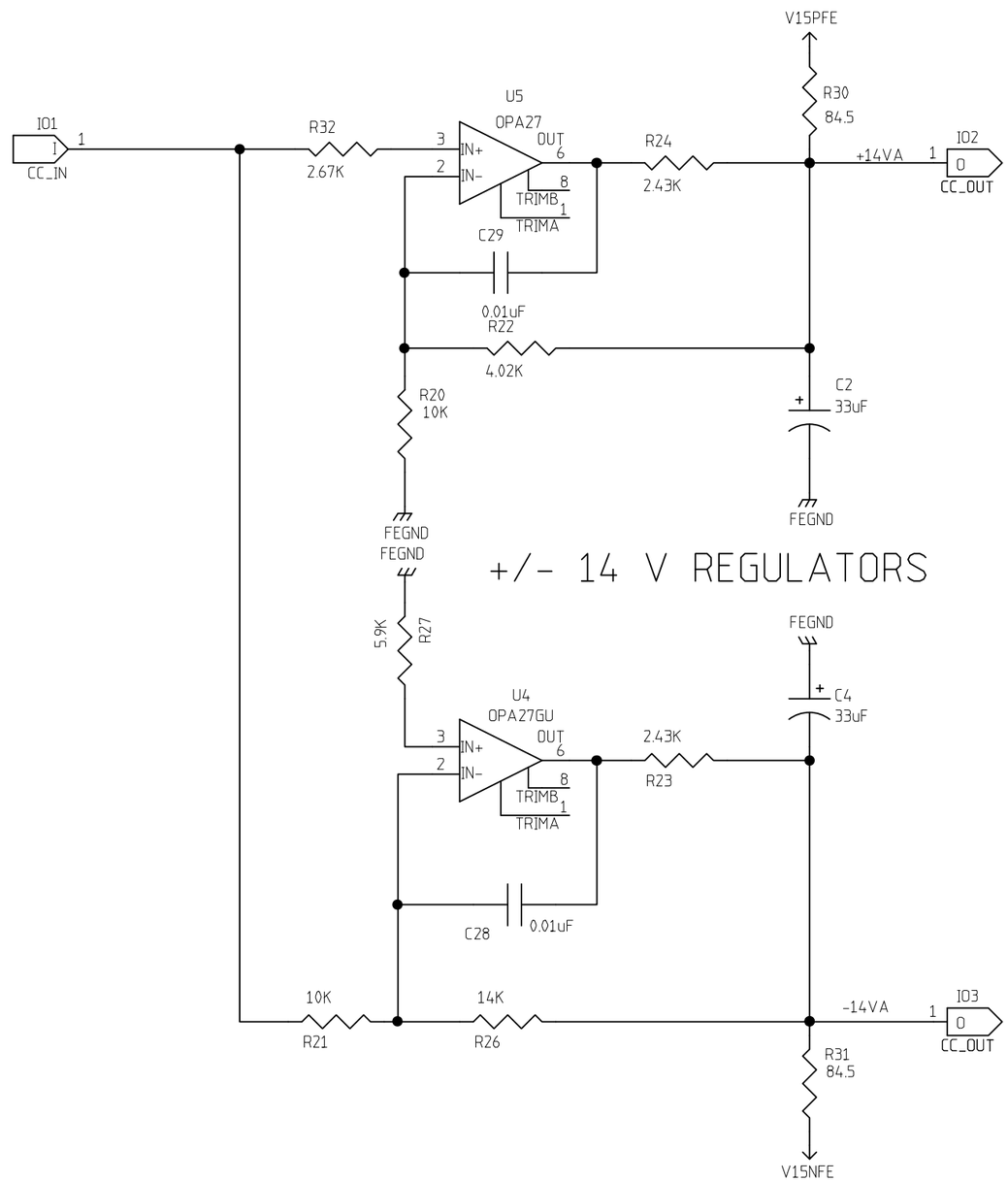

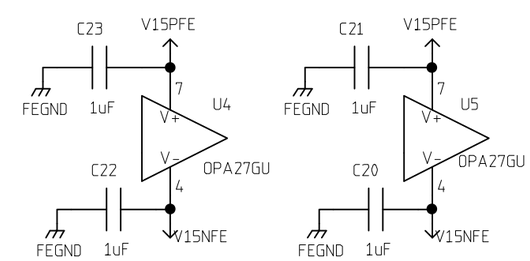

CONTRACT NO.		ZIP			
APPROVALS	DATE	PPD / ETT / ES (STANDFORD 9U) DISCRETE Q AMPLIFIER			
DRAWN					
CHECKED		SIZE B	FSCM NO.	DWG. NO.	REV
ISSUED					
		SCALE		SHEET	

DWG. NO.	SH.	REV

REVISIONS

REV	DESCRIPTION	DATE	APPROVED

10 VOLT REFERENCE

10 VOLT BUFFER & NOISE FILTER

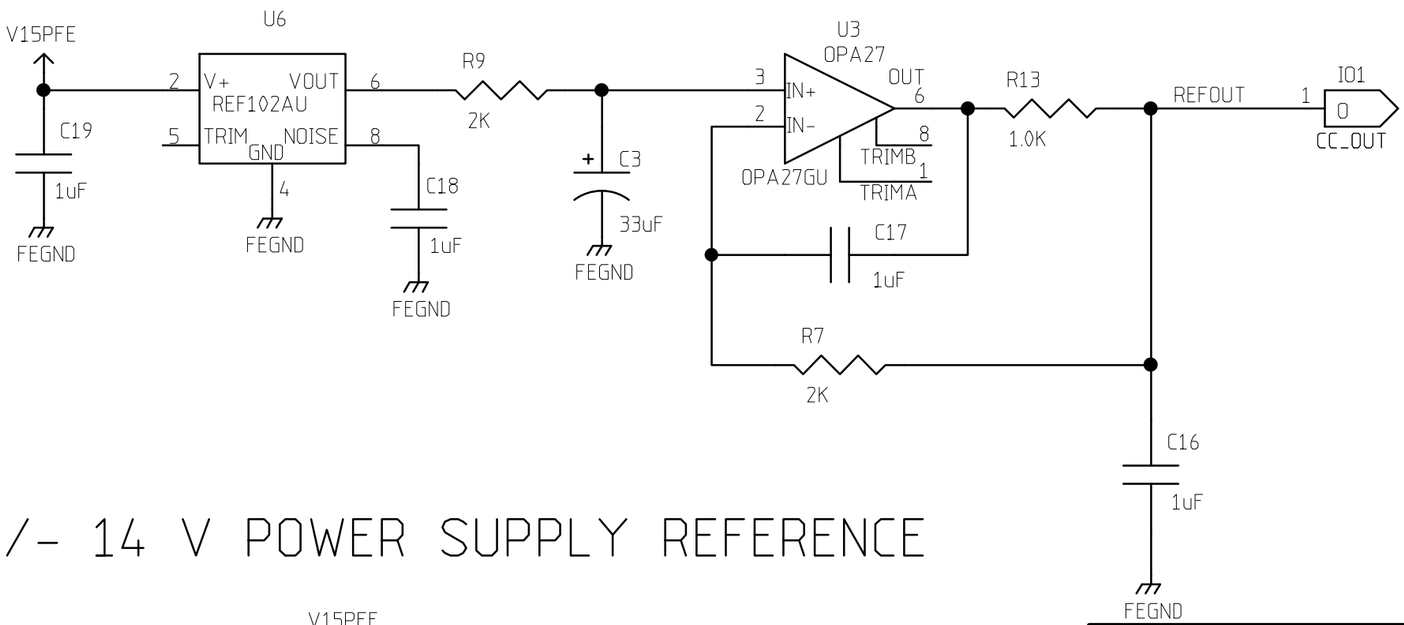

+/- 14 V POWER SUPPLY REFERENCE

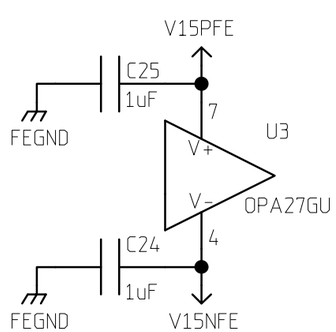

	NAME	DATE
ORIGINATOR	MERLE HALDEMAN	10/13/98
DRAWN	BRUCE MERKEL	10/13/98
CHECKED		
APPROVED		

FERMILAB PPD/ETT/ES CDMS (E-891)
ZIP MODULE
DISCRETE Q AMP REFERENCE

SIZE	FSCM NO.	DWG. NO.	REV
A			

SCALE		SHEET

DWG. NO.	SH.	REV

REVISIONS			
REV	DESCRIPTION	DATE	APPROVED

RELAY SHOWN IN
DEENERGIZED STATE

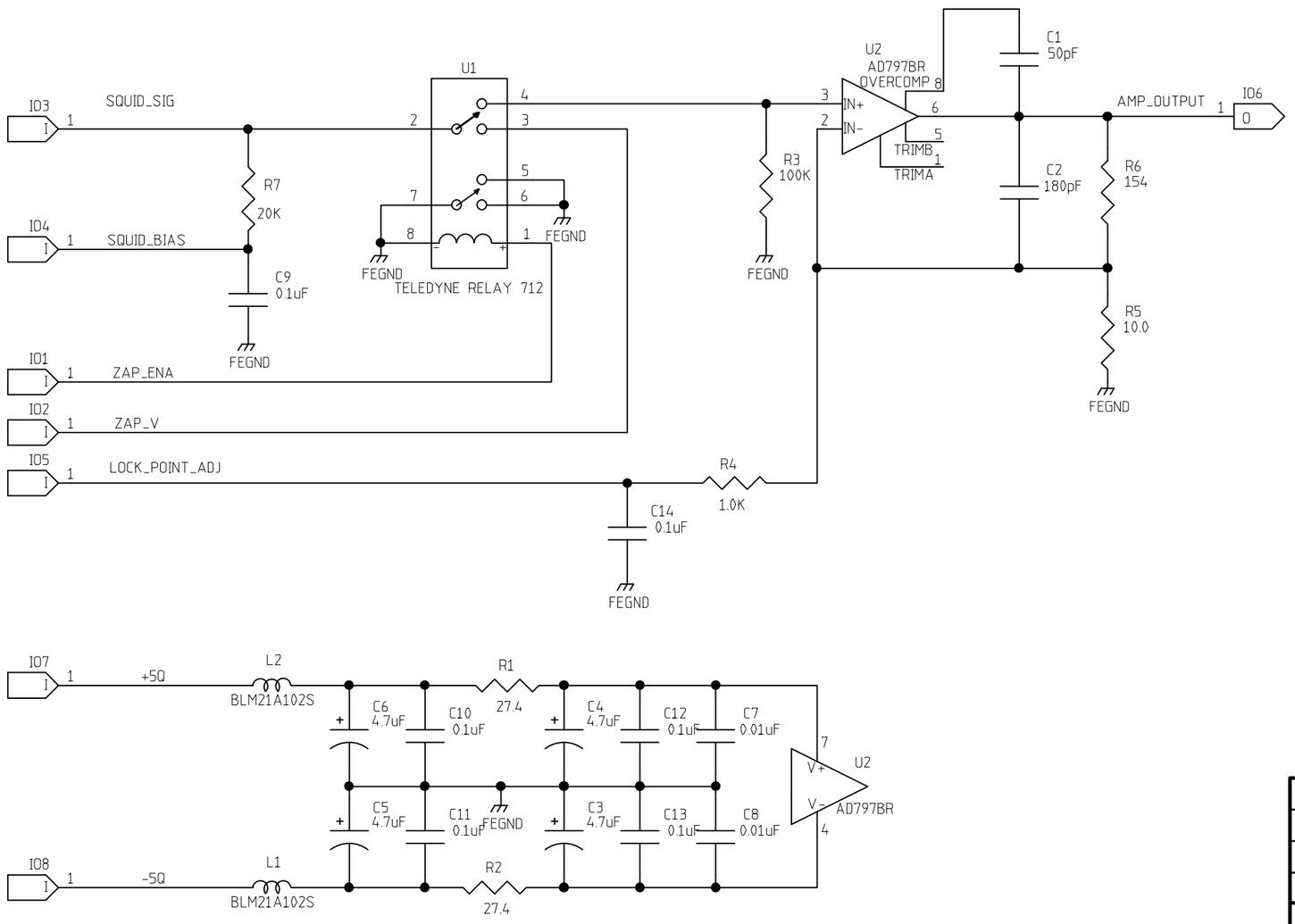

	NAME	DATE
ORIGINATOR	MERLE HALDEMAN	10/1/98
DRAWN	BRUCE MERKEL	10/19/98
CHECKED		
APPROVED		

FERMILAB PPD/ETT/ES CDMS (E-891)
ZIP MODULE
SQUID FRONT END

SIZE	FSCM NO.	DWG. NO.	REV
B			

SCALE		SHEET

REVISIONS			
REV	DESCRIPTION	DATE	APPROVED

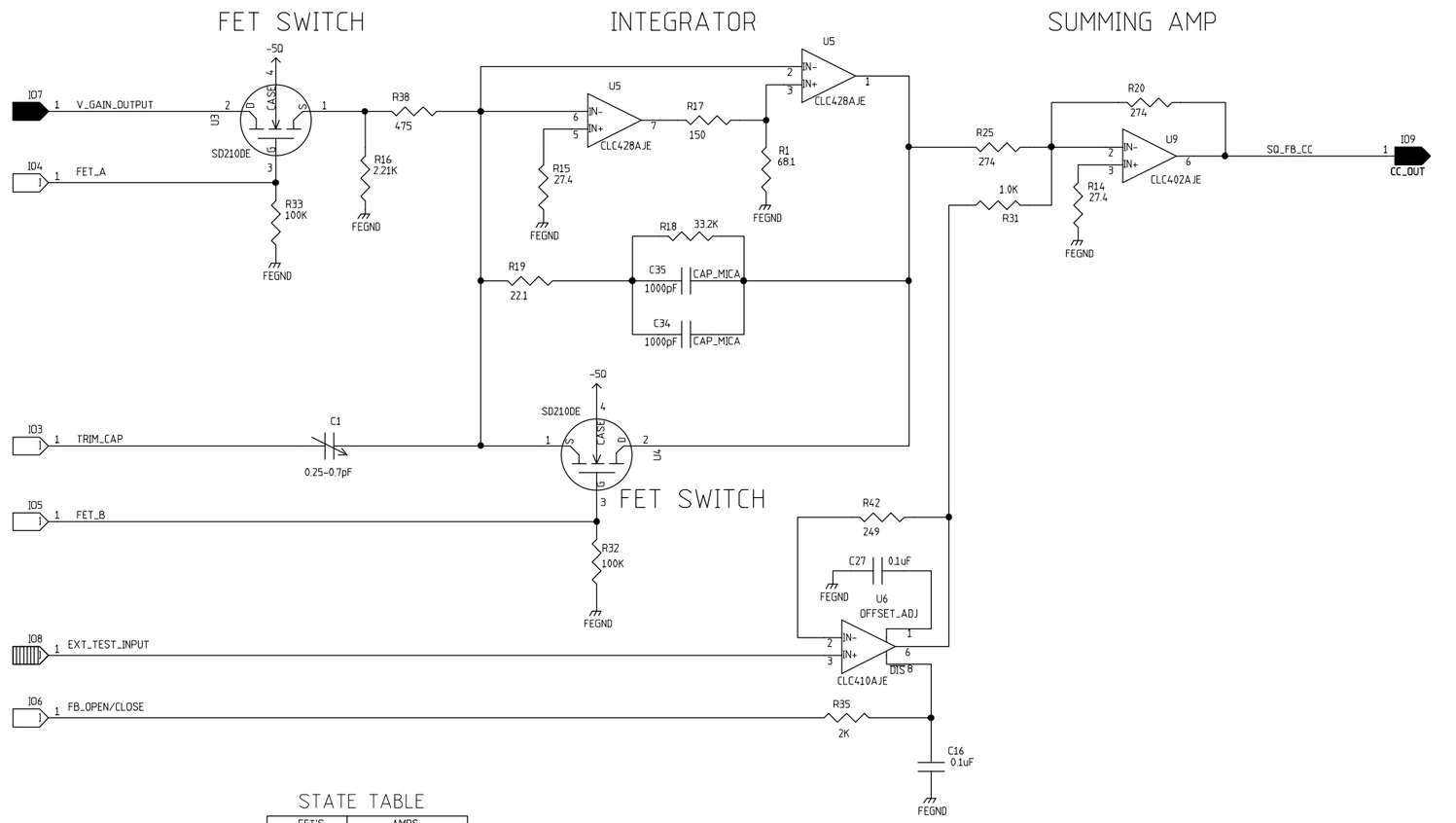

STATE TABLE

	FET'S		AMPS		
FB_O/C	U3	U4	U6	U7	U8
LOW	O	C	E	D	E
HI	C	O	D	E	D

D = OPEN C = CLOSED
E = ENABLE D = DISABLE

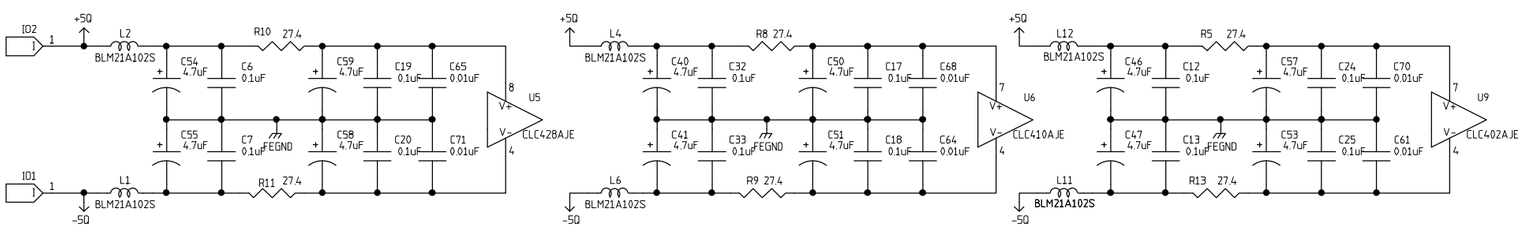

	NAME	DATE
ORIGINATOR	MERLE HALDEMAN	10/2/98
DRAWN	BRUCE MERKEL	10/20/98
CHECKED		
APPROVED		

FERMILAB PPD/ETT/ES CDMS (E-891)
ZIP MODULE
SQUID FEEDBACK CONTROL

SIZE	FSCM NO.	DWG. NO.	REV
C			
SCALE		SHEET	

DWG. NO.
SH.
REV

DWG. NO.	SH.	REV

REVISIONS

REV	DESCRIPTION	DATE	APPROVED

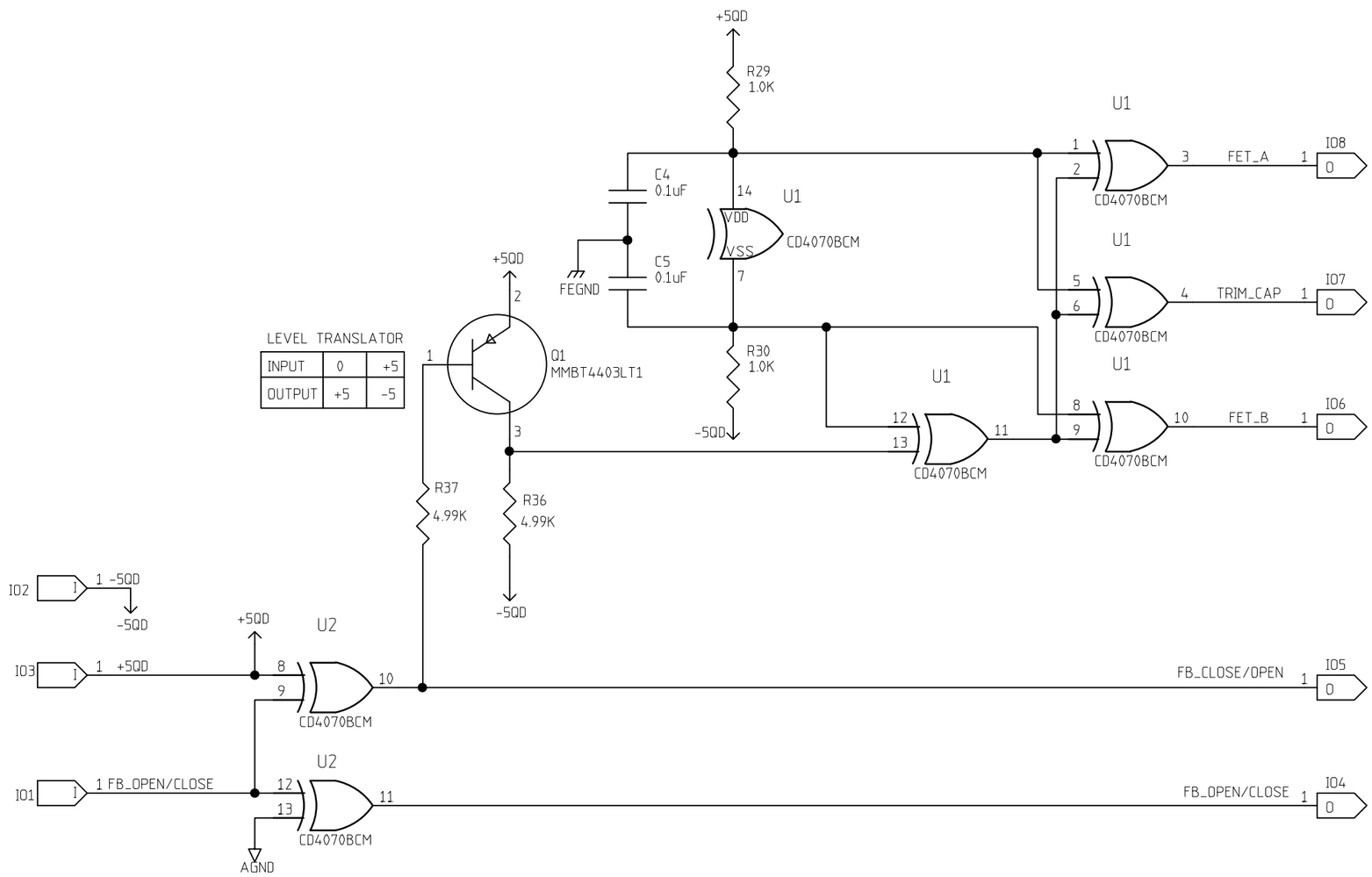

LEVEL TRANSLATOR

INPUT	0	+5
OUTPUT	+5	-5

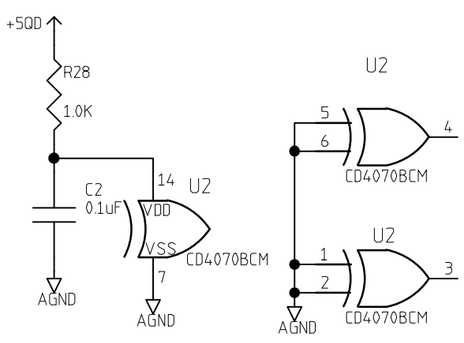

	NAME	DATE
ORIGINATOR	MERLE HALDEMAN	10/2/98
DRAWN	BRUCE MERKEL	10/20/98
CHECKED		
APPROVED		

FERMILAB PPD/ETT/ES CDMS (E-891)
ZIP MODULE
SQUID FEEDBACK LOGIC CONTROL

SIZE	FSCM NO.	DWG. NO.	REV
B			

SCALE		SHEET

DWG. NO.	SH.	REV

REVISIONS			
REV	DESCRIPTION	DATE	APPROVED

MONITOR SELECTION

AMPLIFIERS

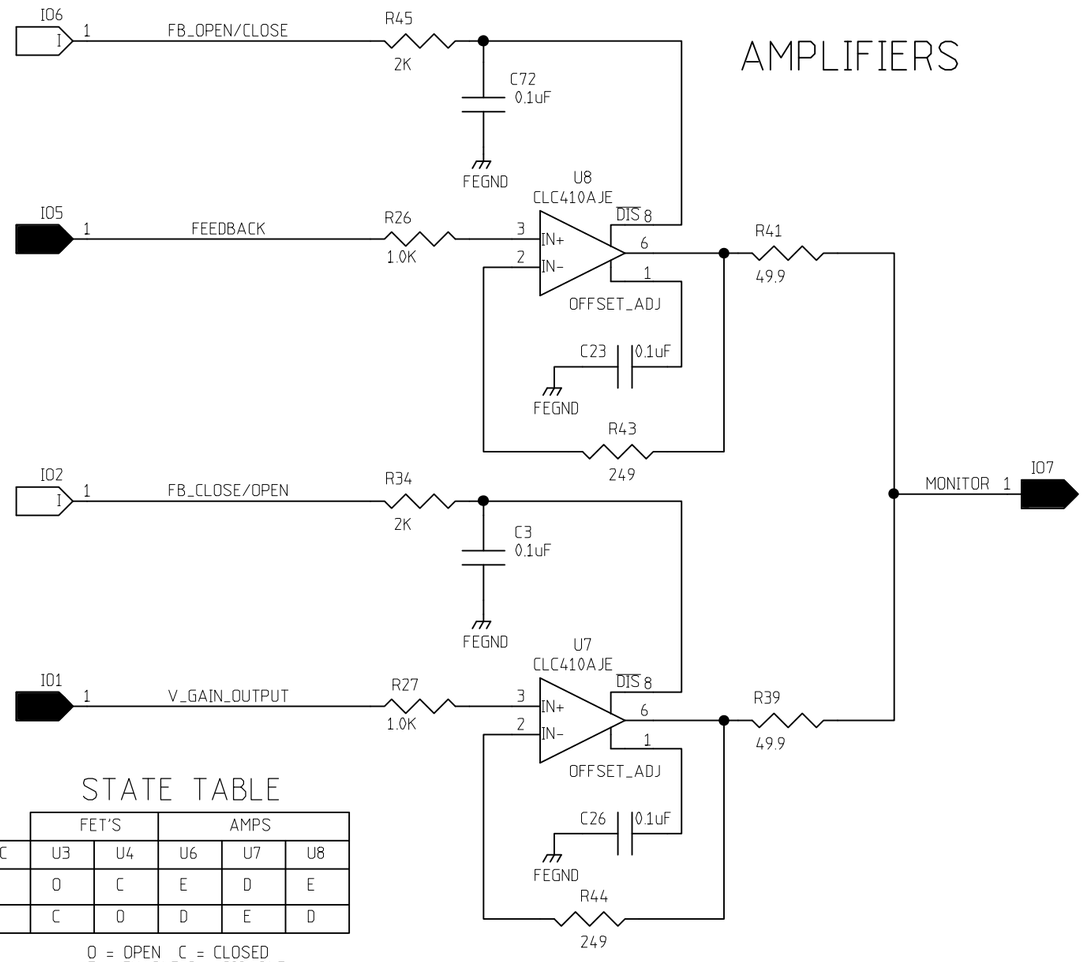

STATE TABLE

	FET'S		AMPS		
FB_O/C	U3	U4	U6	U7	U8
LOW	O	C	E	D	E
HI	C	O	D	E	D

O = OPEN C = CLOSED
E = ENABLE D = DISABLE

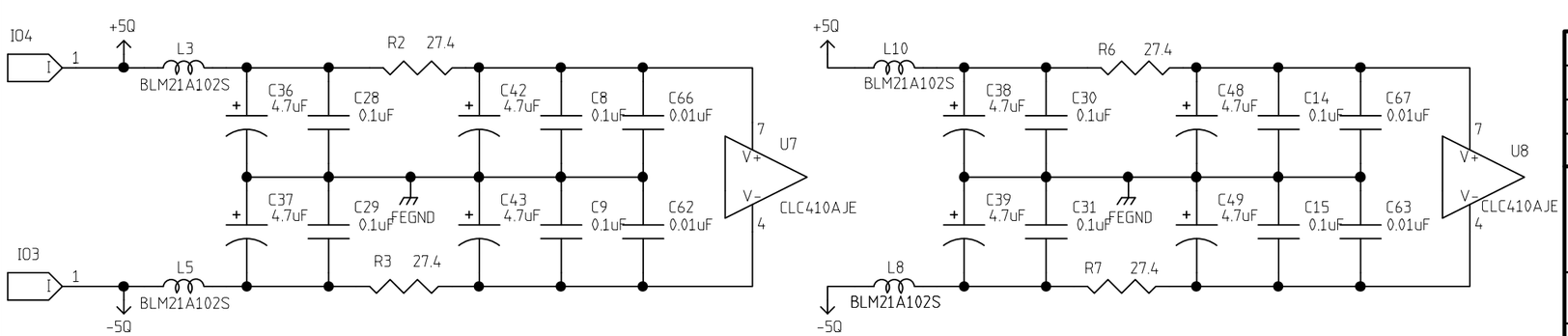

	NAME	DATE
ORIGINATOR	MERLE HALDEMAN	10/2/98
DRAWN	BRUCE MERKEL	10/20/98
CHECKED		
APPROVED		

FERMILAB PPD/ETT/ES CDMS (E-891)
ZIP MODULE
SQUID FEEDBACK MONITOR CONTROL

SIZE	FSCM NO.	DWG. NO.	REV
B			
SCALE		SHEET	

DWG. NO.	SH.	REV

REVISIONS			
REV	DESCRIPTION	DATE	APPROVED

POLARITY SELECTION

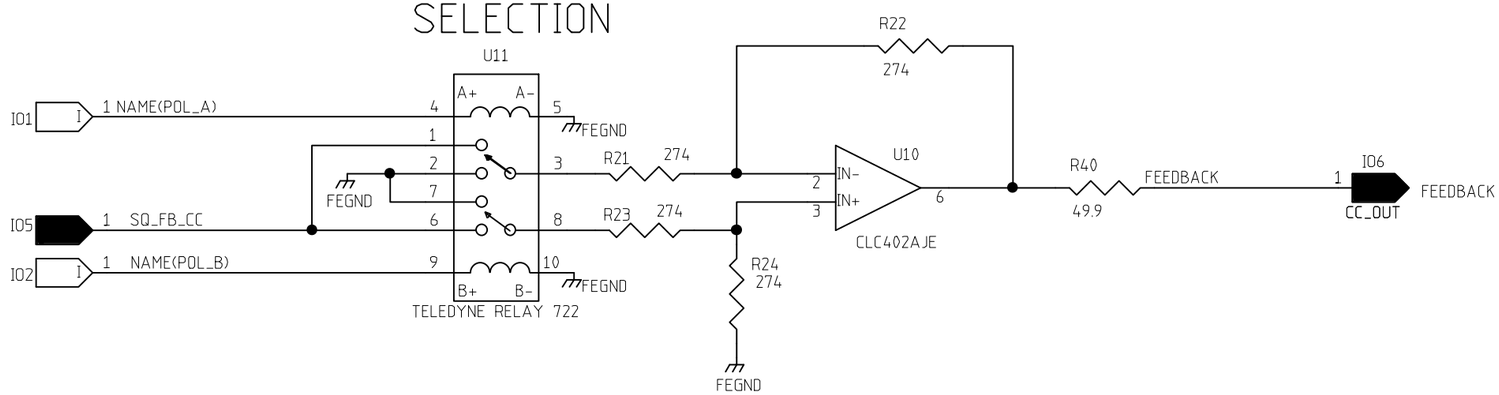

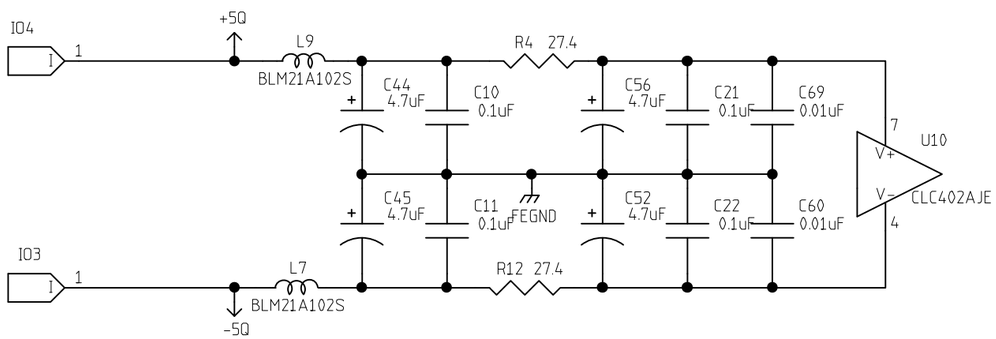

	NAME	DATE
ORIGINATOR	MERLE HALDEMAN	10/2/98
DRAWN	BRUCE MERKEL	10/20/98
CHECKED		
APPROVED		

FERMILAB PPD/ETT/ES CDMS (E-891)
ZIP MODULE
SQUID FEEDBACK POLARITY CONTROL

SIZE	FSCM NO.	DWG. NO.	REV
B			

SCALE		SHEET

REVISIONS			
REV	DESCRIPTION	DATE	APPROVED

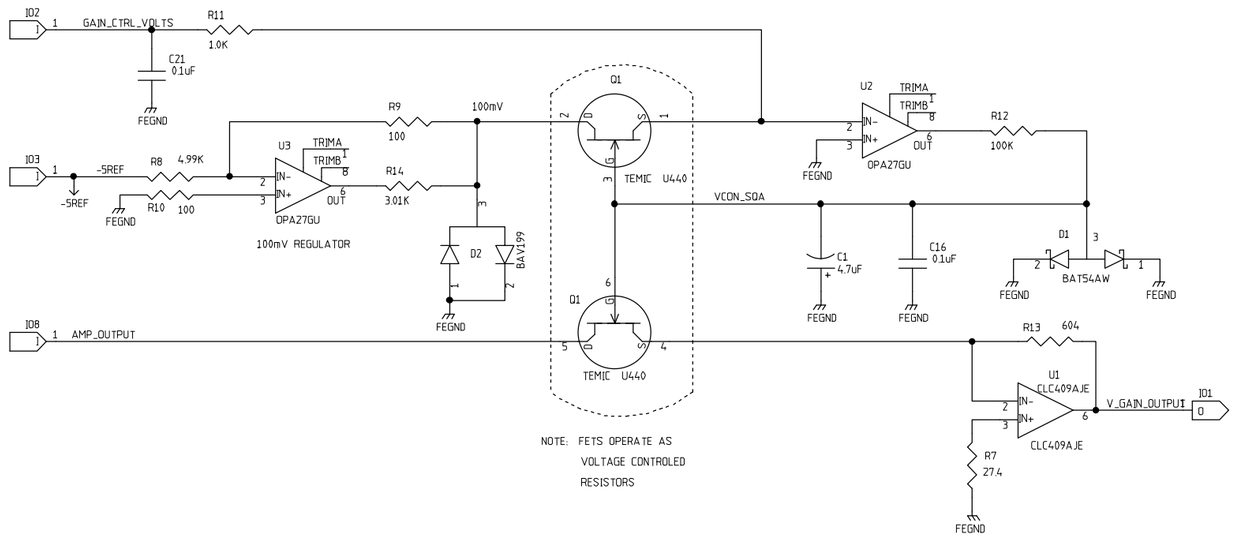

NOTE: FETS OPERATE AS
VOLTAGE CONTROLED
RESISTORS

VARIABLE GAIN AMPLIFIER

GAIN = R13 x $\frac{GVC}{100}$

GCV = GAIN_CONTROL_VOLTAGE IN VOLTS

R13 IN OHMS

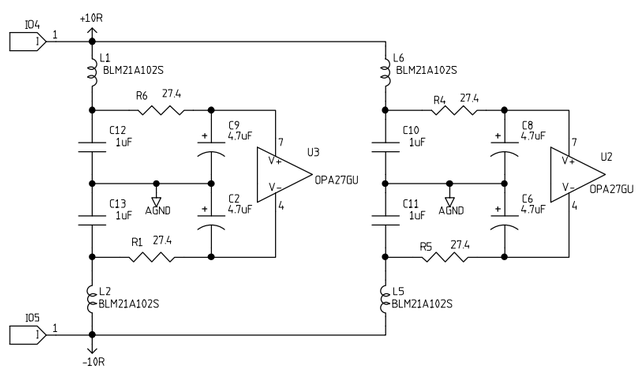

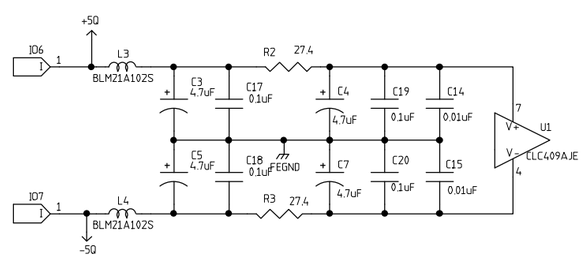

	NAME	DATE
ORIGINATOR	MERLE HALDEMAN	10/1/98
DRAWN	BRUCE MERKEL	10/1/98
CHECKED		
APPROVED		

FERMILAB PPD/ETT/ES CDMS (E-891)
ZIP MODULE
SQUID VARIABLE GAIN AMP

SIZE	FSCM NO.	DWG. NO.	REV
C			
SCALE		SHEET	

DWG. NO.
SH.
REV