ZIP MODULE INDEX
(1/8/99)

| SCHEMATIC SECTION AND PAGE # **(X-X)** | QNTY BRD | SCH. PAGE | DATE CHECKED& MODIFIED | CCKT'S NUMBER | CCKT'S REVIEW | LAST PDF WRT DATE | BOM | LAST REV DATE |
|---|---|---|---|---|---|---|---|---|
| LEGEND **(COVER PAGE)** | | | | N/A | N/A | 3/25/99 | | |
| MISC. CONNECTORS **(1-1)** | 1 | | | N/A | N/A | 3/25/99 | | |
| P2 CONNECTOR BLOCK **(1-2)** | 1 | | | N/A | N/A | 3/25/99 | | |
| P4 CONNECTOR BLOCK **(1-3)** | 1 | | | N/A | N/A | 3/25/99 | | |
| ZIP BLOCK DIAGRAM **(2-1)** | 1 | | | N/A | N/A | 4/8/99 | | |
| SQUID BLOCK DIAGRAM **(3-1)** | 4 | | | N/A | N/A | 4/2/99 | | |
| SQUID FRONT END **(3-2)** | 1 | | | CCM005 | | 1/25/99 | | |
| SQUID VAR. GAIN AMP **(3-3)** | 1 | | | CCM006 | | 1/25/99 | | |
| SQUID FEEDBACK CONTROL BLOCK **(3-4)** | 4 | | | N/A | N/A | 3/25/99 | | |
| SQUID FEEDBACK INTEGRATOR **(3-5)** | 1 | | | CCM008 | | 1/25/99 | | |
| SQUID FEEDBACK POLARITY **(3-6)** | 1 | | | CCM009 | | 1/25/99 | | |
| SQUID FEEDBACK MONITOR **(3-7)** | 1 | | | CCM010 | | 1/25/99 | | |
| SQUID FEEDBACK LOGIC **(3-8)** | 1 | | | CCM011 | | 4/1/99 | | |
| SQUID ZAP CONTROLL **(4-1)** | 1 | | | CCM012 | | 4/2/99 | | |
| QET BLOCK DIAGRAM **(5-1)** | 1 | | | N/A | N/A | 3/25/99 | | |
| QET FRONT END **(5-2)** | 1 | | | CCM015 | | 4/2/99 | | |
| QET FILTER **(5-3)** | 1 | | | CCM014 | | 1/25/99 | | |
| QET DIRECTOR **(5-4)** | 1 | | | CCM021 | | 4/1/99 | | |
| QAMP BLOCK DIAGRAM **(6-1)** | 1 | | | N/A | N/A | 3/25/99 | | |
| DISCRETE Q AMPLIFIER **(6-2)** | 1 | | | CCM001 | | 1/25/99 | | |
| QAMP 14V **(6-3)** | 1 | | | CCM003 | | 4/1/99 | | |
| QBIAS FRONT END **(7-1)** | 1 | | | CCM016 | | 4/1/99 | | |
| LED BLOCK DIAGRAM **(8-1)** | 1 | | | N/A | N/A | 3/25/99 | | |
| **(8-2)** | | | | N/A | N/A | | | |
| LED PULSE CONTROL **(8-3)** | 1 | | | CCM028 | | 4/6/99 | | |
| LED CURRENTCONTROL **(8-4)** | 1 | | | CCM020 | | 4/6/99 | | |
| LED CURRENT SOURCE **(8-5)** | 1 | | | CCM019 | | 1/25/99 | | |
| FETTEMP **(9-1)** | 1 | | | N/A | N/A | 4/8/99 | | |
| DRIVER **(10-1)** | 1 | | | CCM002 | | 4/6/99 | | |
| EXTERNAL TEST RECEIVER **(11-1)** | 1 | | | CCM022 | | 4/6/99 | | |
| DAC&BUFFERS BLOCK DIAGRAM **(12-1)** | 1 | | | N/A | N/A | 3/25/99 | | |
| DAC REFERENCES **(12-2)** | 1 | | | N/A | N/A | 3/25/99 | | |
| DAC PRECISION REFERENCE **(12-3)** | 1 | | | CCM023 | | 1/25/99 | | |
| DAC 10 VOLT REFERENCE **(12-4)** | 1 | | | CCM024 | | 4/2/99 | | |
| DAC 5 VOLT REFERENCE **(12-5)** | XXXXX | XXXX | XXXXX | CCM025 | XXXX | XXXX | XXX | XXX |
| DAC'S 1 TO 7 **(12-6)** | 7 | | | N/A | | 4/2/99 | | |
| DUAL NON-INVERT BUFFER BLOCK **(12-7)** | 1 | | | N/A | N/A | 4/6/99 | | |
| DUAL NON-INVERT. BUFFERS **(12-8)** | 1 | | | CCM007 | | 4/6/99 | | |
| BUFFER FILTER **(12-9)** | 1 | | | CCM017 | | 1/25/99 | | |
| LOGIC BLOCK DIAGRAM **(13-1)** | 1 | | | N/A | N/A | 3/25/99 | | |
| **(13-2)** | | | | N/A | N/A | | | |
| CONTROL LOGIC **(13-3)** | 1 | | | N/A | N/A | 3/25/99 | | |
| CSR LOGIC **(13-4)** | 1 | | | N/A | N/A | 3/25/99 | | |
| POLARITY CONTROL BLOCK**(13-5)** | 1 | | | N/A | | 3/25/99 | | |
| POLARITY CONTROL **(13-6)** | 1 | | | CCM018 | | 4/8/99 | | |
| **(13-7)** | | | | N/A | | | | |
| POWER CONTROL BLOCK DIAGRAM**(14-1)** | 1 | | | N/A | N/A | 4/2/99 | | |
| 5 VOLT SECTION **(14-2)** | 1 | | | CCM026 | | 4/2/99 | | |
| 15 VOLT SECTION **(14-3_)** | 1 | | | CCM027 | | 4/8/99 | | |
| Q AMP REFERENCE **(14-4)** | 1 | | | CCM004 | | 1/25/99 | | |

## PART 1: SECTION, SUBSECTION DECODING

| SECTION DAC/CSR name | SUBSECTION DAC/CSR | SUBSECTION NAME | section/subsection address | section decoding |
|---|---|---|---|---|
| Module Info | ID | | xx00 | zip logic |
| section 0 | RESET | | xx0F | zip logic |
| Sense Bias DAC | DAC 0 | Sensor Bias A | xx1A | zip logic |
| section 1 | DAC 1 | Sensor Bias B | xx1B | zip logic |
| | DAC 2 | Sensor Bias C | xx1C | zip logic |
| | DAC 3 | Sensor Bias D | xx1D | zip logic |
| Squid Bias DAC | DAC 0 | Squid Bias A | xx2A | zip logic |
| section 2 | DAC 1 | Squid Bias B | xx2B | zip logic |
| | DAC 2 | Squid Bias C | xx2C | zip logic |
| | DAC 3 | Squid Bias D | xx2D | zip logic |
| Squid Lock DAC | DAC 0 | Squid Lock A | xx3A | zip logic |
| section 3 | DAC 1 | Squid Lock B | xx3B | zip logic |
| | DAC 2 | Squid Lock C | xx3C | zip logic |
| | DAC 3 | Squid Lock D | xx3D | zip logic |
| Squid Gain DAC | DAC 0 | Squid Gain A | xx4A | zip logic |
| section 4 | DAC 1 | Squid Gain B | xx4B | zip logic |
| | DAC 2 | Squid Gain C | xx4C | zip logic |
| | DAC 3 | Squid Gain D | xx4D | zip logic |
| Squid Driver DAC | DAC 0 | Squid Driver A | xx5A | zip logic |
| section 5 | DAC 1 | Squid Driver B | xx5B | zip logic |
| | DAC 2 | Squid Driver C | xx5C | zip logic |
| | DAC 3 | Squid Driver D | xx5D | zip logic |
| Q Driver DAC | DAC 0 | Q O Driver | xx60 | zip logic |
| section 6 | DAC 1 | Q I Driver | xx61 | zip logic |
| | DAC 2 | Test Voltage | xx62 | zip logic |
| | DAC 3 | | | zip logic |
| Q Bias DAC | DAC 0 | Q O Bias | xx70 | zip logic |
| section 7 | DAC 1 | Q I Bias | xx71 | zip logic |
| | DAC 2 | LED Bias | xx72 | zip logic |
| | DAC 3 | Zap Voltage | xx73 | zip logic |
| unused | | | | |
| section 8 to D | | | | |
| CSR | CSR0 | Sense Bias CSR | xxE0 | zip logic |
| section E | CSR1 | Squid CSR | xxE1 | zip logic |
| | CSR2 | Squid Driver CSR | xxE2 | zip logic |
| | CSR3 | LED CSR | xxE3 | zip logic |
| | CSR4 | Q CSR | xxE4 | zip logic |
| | CSR5 | CSR5 | xxE5 | zip logic |
| Test | | Test Pulse | xxFF | zip logic |
| section F | | | | |

The Module is decoded from bits 8 to12 of the address bus

The SECTIONS are decoded from bits 4 to 7 of the address bus

The SUBSECTIONS are decoded from bits 0 to 3 of the address bus

Outputs are from logic #1: zip_logic3.vhd

## PART 2: CSR SUBSECTION OUTPUTS vs DATA BUSS BITS

| Data Bit | Sense Bias CSR | Squid CSR | Squid Driver CSR | LED CSR | Q CSR | CSR5 | Module ID | Data Bit |
|---|---|---|---|---|---|---|---|---|
| BD0 | EXT_ENA_A | FB_C/O_SQ_A | **CHA_GAIN0** | WIDTH_0 | ***Q_O_GAIN0*** | TRIG_ENA | Serial Number bit 0 | BD0 |
| BD1 | EXT_ENA_B | FB_C/O_SQ_B | **CHA_GAIN1** | WIDTH_1 | ***Q_O_GAIN1*** | | Serial Number bit 1 | BD1 |
| BD2 | EXT_ENA_C | FB_C/O_SQ_C | **CHA_GAIN2** | WIDTH_2 | ***Q_O_GAIN2*** | | Serial Number bit 2 | BD2 |
| BD3 | EXT_ENA_D | FB_C/O_SQ_D | **CHA_POLARITY** | WIDTH_3 | ***Q_O_POLARITY*** | | Serial Number bit 3 | BD3 |
| BD4 | ***HEAT_PULSE_A*** | ***SQ_POL_A_-*** | **CHB_GAIN0** | WIDTH_4 | ***Q_I_GAIN0*** | | Serial Number bit 4 | BD4 |
| BD5 | ***HEAT_PULSE_B*** | ***SQ_POL_B_-*** | **CHB_GAIN1** | WIDTH_5 | ***Q_I_GAIN1*** | | Serial Number bit 5 | BD5 |
| BD6 | ***HEAT_PULSE_C*** | ***SQ_POL_C_-*** | **CHB_GAIN2** | WIDTH_6 | ***Q_I_GAIN2*** | | Serial Number bit 6 | BD6 |
| BD7 | ***HEAT_PULSE_D*** | ***SQ_POL_D_-*** | **CHB_POLARITY** | WIDTH_7 | ***Q_I_POLARITY*** | | Serial Number bit 7 | BD7 |
| BD8 | | TEST_ENA_A | **CHC_GAIN0** | RATE_0 | Q_O_ENA | | Board Version bit 0 | BD8 |
| BD9 | | TEST_ENA_B | **CHC_GAIN1** | RATE_1 | Q_I_ENA | | Board Version bit 1 | BD9 |
| BD10 | | TEST_ENA_C | **CHC_GAIN2** | RATE_2 | | | Board Version bit 2 | BD10 |
| BD11 | | TEST_ENA_D | **CHC_POLARITY** | RATE_3 | | | Board Version bit 3 | BD11 |
| BD12 | ***ZAP_ENA_A*** | PRE_INT_MON_A | **CHD_GAIN0** | RATE_4 | LED_1_ENA | | Board Type bit 0 | BD12 |
| BD13 | ***ZAP_ENA_B*** | PRE_INT_MON_B | **CHD_GAIN1** | RATE_5 | LED_2_ENA | | Board Type bit 1 | BD13 |
| BD14 | ***ZAP_ENA_C*** | PRE_INT_MON_C | **CHD_GAIN2** | RATE_6 | LED_CTRL_0 | | Board Type bit 2 | BD14 |
| BD15 | ***ZAP_ENA_D*** | PRE_INT_MON_D | **CHD_POLARITY** | RATE_7 | LED_CTRL_1 | | Board Type bit 3 | BD15 |

Register outputs that are PLAIN text are outputs of the latching register: logic #2: csr_logic3.vhd

**Register outputs that are BOLD text are outputs that are pulses from logic #3: ziprelay2.vhd**

***Register outputs that are bold and italized text are outputs that are pulses from logic #4: chargeamps.vhd***

Module Info ID bits are read only. These are shorts to +VCC or GND to set the condition

## PART 3: GAIN AND POLARITY DECODING MATRIZ

Data bits to the DACs set the output voltage level

DAC output voltage calculation:
Vout=Vrefl +( (Vrefh-Vrefl) * N)/4096
N= is digital code in decimal

| POLARITY | 2 | 1 | 0 | GAIN |
|---|---|---|---|---|
| 0 | 0 | 0 | 0 | 1 |
| 0 | 0 | 0 | 1 | 1.43 |
| 0 | 0 | 1 | 0 | 2 |
| 0 | 0 | 1 | 1 | 5 |
| 0 | 1 | 0 | 0 | 10 |
| 0 | 1 | 0 | 1 | 14.3 |
| 0 | 1 | 1 | 0 | 20 |
| 0 | 1 | 1 | 1 | 50 |
| 1 | 0 | 0 | 0 | -1 |
| 1 | 0 | 0 | 1 | -1.43 |
| 1 | 0 | 1 | 0 | -2 |
| 1 | 0 | 1 | 1 | -5 |
| 1 | 1 | 0 | 0 | -10 |
| 1 | 1 | 0 | 1 | -14.3 |
| 1 | 1 | 1 | 0 | -20 |
| 1 | 1 | 1 | 1 | -50 |

NOTE:
ALL SIGNAL NAMES ARE HIGH TRUE

| LED_CTRL_1 | LED_CTRL_0 | |
|---|---|---|
| 0 | 0 | OFF |
| 0 | 1 | SINGLE |
| 1 | 0 | MULTI |
| 1 | 1 | ON |

**PART 5: Module Address decode vs. slot number**

| Address | | Slot Number |
|---|---|---|
| xxx0 0000 xxxx xxxx | 00xx | 0 |
| xxx0 0001 xxxx xxxx | 01xx | 1 |
| xxx0 0010 xxxx xxxx | 02xx | 2 |
| xxx0 0011 xxxx xxxx | 03xx | 3 |
| xxx0 0100 xxxx xxxx | 04xx | 4 |
| xxx0 0101 xxxx xxxx | 05xx | 5 |
| xxx0 0110 xxxx xxxx | 06xx | 6 |
| xxx0 0111 xxxx xxxx | 07xx | 7 |
| xxx0 1000 xxxx xxxx | 08xx | 8 |
| xxx0 1001 xxxx xxxx | 09xx | 9 |
| xxx0 1010 xxxx xxxx | 0Axx | 10 |
| xxx0 1011 xxxx xxxx | 0Bxx | 11 |
| xxx0 1100 xxxx xxxx | 0Cxx | 12 |
| xxx0 1101 xxxx xxxx | 0Dxx | 13 |
| xxx0 1110 xxxx xxxx | 0Exx | 14 |
| xxx0 1111 xxxx xxxx | 0Fxx | 15 |
| xxx1 0000 xxxx xxxx | 10xx | 16 |
| xxx1 0001 xxxx xxxx | 11xx | 17 |
| xxx1 0020 xxxx xxxx | 12xx | 18 |
| xxx1 0011 xxxx xxxx | 13xx | 19 |
| xxx1 0100 xxxx xxxx | 14xx | 20 |
| xxx1 0101 xxxx xxxx | 15xx | 21 |

**PART 4: CHIPS AND DECODED OUTPUTS TO ZIP BOARD CIRCUITS**

These are the names of the chips, the project name that the code is found in
and the outputs by name that they decode for the ZIP board

| project name:chargeamps | project name: zipchips | project name:ziprelay2 | project name: addrlogic |
|---|---|---|---|
| CHARGE AMP | CSR_LOGIC3 | ZIPRELAY2 | ZIP_LOGIC3 |
| qo_gain_1 | qo_ena | chA_gain_1 | moduleid |
| qo_gain_10 | qi_ena | chA_gain_10 | sense_bias_dac |
| qo_gain_1_143 | led_1_ena | chA_gain_1_143 | squid_bias_dac |
| qo_gain_2_5 | led_2_ena | chA_gain_2_5 | squid_lock_dac |
| qo_gain_1_2 | ext_ena_A | chA_gain_1_2 | squid_gain_dac |
| qo_gain_143_5 | ext_ena_B | chA_gain_143_5 | squid_driver_dac |
| qo_pol_pos | ext_ena_C | chA_pol_pos | q_driver_dac |
| qo_pol_neg | ext_ena_D | chA_pol_neg | q_bias_dac |
| qi_gain_1 | fb_c/o_sq_A | chB_gain_1 | sense_bias_csr |
| qi_gain_10 | fb_c/o_sq_B | chB_gain_10 | squid_csr |
| qi_gain_1_143 | fb_c/o_sq_C | chB_gain_1_143 | squid_driver_csr |
| qi_gain_2_5 | fb_c/o_sq_D | chB_gain_2_5 | led_csr |
| qi_gain_1_2 | test_ena_A | chB_gain_1_2 | q_csr |
| qi_gain_143_5 | test_ena_B | chB_gain_143_5 | csr5 |
| qi_pol_pos | test_ena_C | chB_pol_pos | rw |
| qi_pol_neg | test_ena_D | chB_pol_neg | rst |
| zap_ena_A | pre_int_mon_A | chC_gain_1 | testpulse |
| zap_ena_B | pre_int_mon_B | chC_gain_10 | buffer_read |
| zap_ena_C | pre_int_mon_C | chC_gain_1_143 | buffer_write |
| zap_ena_D | pre_int_mon_D | chC_gain_2_5 | moduleselect |
| heat_pulse_A | trig_ena | chC_gain_1_2 | |
| heat_pulse_B | led_pulse_out | chC_gain_143_5 | *sense_bias_csr_ena* |
| heat_pulse_C | clockena | chC_pol_pos | *squid_csr_ena* |
| heat_pulse_D | | chC_pol_neg | *squid_driver_csr_ena* |
| sq_pol_A_pos | READ ONLY INFO | chD_gain_1 | *led_csr_ena* |
| sq_pol_A_neg | module configuration | chD_gain_10 | *q_csr_ena* |
| sq_pol_B_pos | | chD_gain_1_143 | *csr5_ena* |
| sq_pol_B_neg | | chD_gain_2_5 | NOTE: |
| sq_pol_C_pos | | chD_gain_1_2 | These _ena outputs |
| sq_pol_C_neg | | chD_gain_143_5 | are for test purposes |
| sq_pol_D_pos | | chD_pol_pos | and have no |
| sq_pol_D_neg | | chD_pol_neg | functional connection |
| clockena | | moduleaddr | to the board |
| | | clockena | |

**CONTROL INPUTS FROM ZIP_LOGIC**

| | | | |
|---|---|---|---|
| sense_bias_csr | sense_bias_csr | squid_driver_csr | |
| squid_csr | squid_csr | moduleselect | |
| q_csr | q_csr | | |
| | csr5 | | |
| | led_csr | | |
| | moduleid | | |
| testpulse | testpulse | | |

**CONTROL INPUTS FROM CSR_LOGIC3**

| | | | |
|---|---|---|---|
| trig_ena | | | |

**CONTROL INPUTS FROM OTHER SOURCES**

| | | | |
|---|---|---|---|
| read | read | read | read |
| write | write | write | write |
| | rst | rst | slot(4 downto 0) |
| poweron | poweron | poweron | addr(15 downto 0) |
| trigplus_minus | trigplus_minus | | |

This file is named Backplane Pinout.xls
and can be found at
Network Neighborhood\Entire Network\Microsoft Windows Network\Fnal\Ppdserver1\ETT.PPD\PROJECTS\Ett_ES\CDMS\crates\backplane\user manual

50 Pin D Connector
Detector I/O
Slots 1 thru 9, and
12 thru 20
[Crate Front View]
**P/J1**

| Pin # | | Pin # | | Pin # | |
|---|---|---|---|---|---|
| 50 | Qi Feedback | | | 17 | FEGND |
| | | 33 | FEGND | | |
| 49 | FET Temp+ | | | 16 | Qi Drain |
| | | 32 | FEGND | | |
| 48 | FEGND | | | 15 | Qi Bias |
| | | 31 | Qi Source | | |
| 47 | FEGND | | | 14 | FEGND |
| | | 30 | Qo Feedback | | |
| 46 | FET Heater- | | | 13 | FEGND |
| | | 29 | FEGND | | |
| 45 | FET Heater + | | | 12 | Qo Drain |
| | | 28 | FEGND | | |
| 44 | FEGND | | | 11 | Qo Bias |
| | | 27 | Qo Source | | |
| 43 | FEGND | | | 10 | FEGND |
| | | 26 | LED 2 | | |
| 42 | LED 1 | | | 9 | FEGND |
| | | 25 | FEGND | | |
| 41 | FBout C | | | 8 | SQUID Bias C |
| | | 24 | FEGND | | |
| 40 | FEGND | | | 7 | QET Bias C |
| | | 23 | SQUID Bias D | | |
| 39 | FEGND | | | 6 | FEGND |
| | | 22 | FBoutD | | |
| 38 | QET Bias D | | | 5 | FEGND |
| | | 21 | FEGND | | |
| 37 | FBout A | | | 4 | SQUID Bias A |
| | | 20 | FEGND | | |
| 36 | FEGND | | | 3 | QET Bias A |
| | | 19 | SQUID Bias B | | |
| 35 | QET Bias B | | | 2 | FBout B |
| | | 18 | FEGND | | |
| 34 | FEGND | | | 1 | FEGND |

The backplane connector is
part # AMP 205211-2

The mating connector on the
module is part # AMP 745355-4

48 Pin DIN Connector
Crate Power
Slots 1 thru 21
[Crate Front View]
**P/J2**

| Pin # | Row A | Row B | Row C |
|---|---|---|---|
| 1 | FEGND | Aux Heater Power+ | FEGND |
| 2 | FEGND | Aux Heater Power- | FEGND |
| 3 | FE +15 | FE +15 | FE +15 |
| 4 | FEGND | FEGND | FEGND |
| 5 | FE -15 | FE -15 | FE -15 |
| 6 | FEGND | FEGND | FEGND |
| 7 | FEGND | FEGND | FEGND |
| 8 | AGND | AGND | AGND |
| 9 | A15+ | A15+ | A15+ |
| 10 | AGND | AGND | AGND |
| 11 | A15- | A15- | A15- |
| 12 | AGND | AGND | AGND |
| 13 | 10Hz+ | AGND | VARIABLE+ |
| 14 | 10Hz- | AGND | VARIABLE- |
| 15 | 1kHz+ | **Spare** | Trig+ |
| 16 | 1kHz- | **Spare** | Trig- |

NOTES;

| | |
|---|---|
| 1 | Revision 10/23/97 changed 48 pin contacts C13,C14,C15 and C16 |
| 2 | Revised view of 50 Pin and 25 Pin connectors to show proper 0rientation on 4/7/99 |
| 3 | 10 Layer Backplane |

The backplane connector is
part # AMP 535034-4

The mating connector on the
module is part # AMP 650948-5

25 Pin D Connector
Detector Output
Slots 1 thru 9, and
12 thru 20
[Crate Front View]
**P/J3**

| Pin # | | | Pin # |
|---|---|---|---|
| | | | 13 |
| 25 | | | |
| | | | 12 |
| 24 | | | |
| | | | 11 |
| 23 | | | |
| | | | 10 |
| 22 | AGND | | |
| | | FET T SENSE | 9 |
| 21 | AGND | | |
| | | LED Vmon | 8 |
| 20 | AGND | | |
| | | LED Imon | 7 |
| 19 | AGND | | |
| | | SQUID D | 6 |
| 18 | AGND | | |
| | | SQUID C | 5 |
| 17 | AGND | | |
| | | SQUID B | 4 |
| 16 | AGND | | |
| | | SQUID A | 3 |
| 15 | AGND | | |
| | | Qo Out | 2 |
| 14 | AGND | | |
| | | Qi Out | 1 |

The backplane connector is
part # AMP 207463-1

The mating connector on the
module is part # AMP 745353-4

Slots 1 thru 20
Detector n
(n = 1 through 18)
[Crate Front View]
**P/J4**

| Pin # | Row A | Row B | Row C |
|---|---|---|---|
| 1 | 5 Volts | 5 Volts | 5 Volts |
| 2 | 5 Volts | 5 Volts | 5 Volts |
| 3 | 5 Volts | 5 Volts | 5 Volts |
| 4 | 5 Volts | 5 Volts | 5 Volts |
| 5 | DGND | DGND | DGND |
| 6 | D0 | DGND | D8 |
| 7 | D1 | DGND | D9 |
| 8 | D2 | DGND | D10 |
| 9 | D3 | DGND | D11 |
| 10 | D4 | DGND | D12 |
| 11 | D5 | DGND | D13 |
| 12 | D6 | DGND | D14 |
| 13 | D7 | DGND | D15 |
| 14 | DGND | DGND | DGND |
| 15 | A 0 | DGND | A 8 |
| 16 | A 1 | DGND | A 9 |
| 17 | A 2 | DGND | A 10 |
| 18 | A 3 | DGND | A 11 |
| 19 | A 4 | DGND | A 12 |
| 20 | A 5 | DGND | A 13 |
| 21 | A 6 | DGND | A 14 |
| 22 | A 7 | DGND | A 15 |
| 23 | DGND | DGND | DGND |
| 24 | Read | DGND | Write |
| 25 | DGND | DGND | DGND |
| 26 | 5 Volts | 5 Volts | 5 Volts |
| 27 | 5 Volts | 5 Volts | 5 Volts |
| 28 | 5 Volts | 5 Volts | 5 Volts |
| 29 | Local Address A4 | Local Address A3 | 5 Volts |
| 30 | Local Address A2 | Local Address A1 | Local Address A0 |
| 31 | DGND | DGND | DGND |
| 32 | Bussed Spare 1 | Bussed Spare 2 | Sync out |

The backplane connector is
part # AMP 535032-4

The mating connector on the
module is part # AMP 650947-5

Slot 21
GPIB Controller
[Crate Front View]
**P/J4**

| Row A | Row B | Row C |
|---|---|---|
| spare | 5 Volts | Trig1- |
| spare | 5 Volts | Trig1+ |
| 5 Volts | 5 Volts | spare |
| 5 Volts | 5 Volts | spare |
| DGND | DGND | DGND |
| D0 | DGND | D8 |
| D1 | DGND | D9 |
| D2 | DGND | D10 |
| D3 | DGND | D11 |
| D4 | DGND | D12 |
| D5 | DGND | D13 |
| D6 | DGND | D14 |
| D7 | DGND | D15 |
| DGND | DGND | DGND |
| A 0 | DGND | A 8 |
| A 1 | DGND | A 9 |
| A 2 | DGND | A 10 |
| A 3 | DGND | A 11 |
| A 4 | DGND | A 12 |
| A 5 | DGND | A 13 |
| A 6 | DGND | A 14 |
| A 7 | DGND | A 15 |
| DGND | DGND | DGND |
| Read | DGND | Write |
| DGND | DGND | DGND |
| 5 Volts | 5 Volts | 5 Volts |
| 5 Volts | 5 Volts | 5 Volts |
| 5 Volts | 5 Volts | 5 Volts |
| 5 Volts | 5 Volts | 5 Volts |
| DGND | DGND | DGND |
| Bussed Spare 1 | Bussed Spare 2 | Sync out |

## SYMBOL LEDGEND

AGND — ANALOG GROUND PLANE

FEGND — FRONT END GROUND PLANE

GND — DIGITAL GROUND PLANE

V15P V15PFE +10R +5REF +5QD +5Q VCC

CONNECTIONS TO POWER PLANES

V15N V15NFE -10R -5REF -5QD -5Q

INTRA PAGE CONNECTION

EXTERNAL PAGE CONNECTION OUTPUT

EXTERNAL PAGE CONNECTION INPUT

BACKPLANE CONNECTOR PIN

BLOCK — INPUT PIN — OUTPUT PIN

SYMBOL

## PAGE CONNECTOR DESIGNATIONS:

ANALOG CONTROL INPUT — ANALOG CONTROL OUTPUT

ANALOG SIGNAL INPUT — ANALOG SIGNAL OUTPUT

3-3(2C)

SECTION PAGE COORDINATES

## REVISIONS

| REV | DESCRIPTION | DATE | APPROVED |
|---|---|---|---|
| | | | |

| | NAME | DATE |
|---|---|---|
| ORIGINATOR | MERLE HALDEMAN | 12/21/98 |
| DRAWN | BRUCE MERKEL | 12/21/98 |
| CHECKED | TOM CRENNA | 12/21/98 |
| APPROVED | | |

FERMILAB PPD/ETT/ES CDMS (E-891)
ZIP MODULE DRAWING
SYMBOL LEGEND

| SIZE | FSCM NO. | DWG. NO. | REV |
|---|---|---|---|
| A | | | |

SCALE | SHEET COVER PAGE

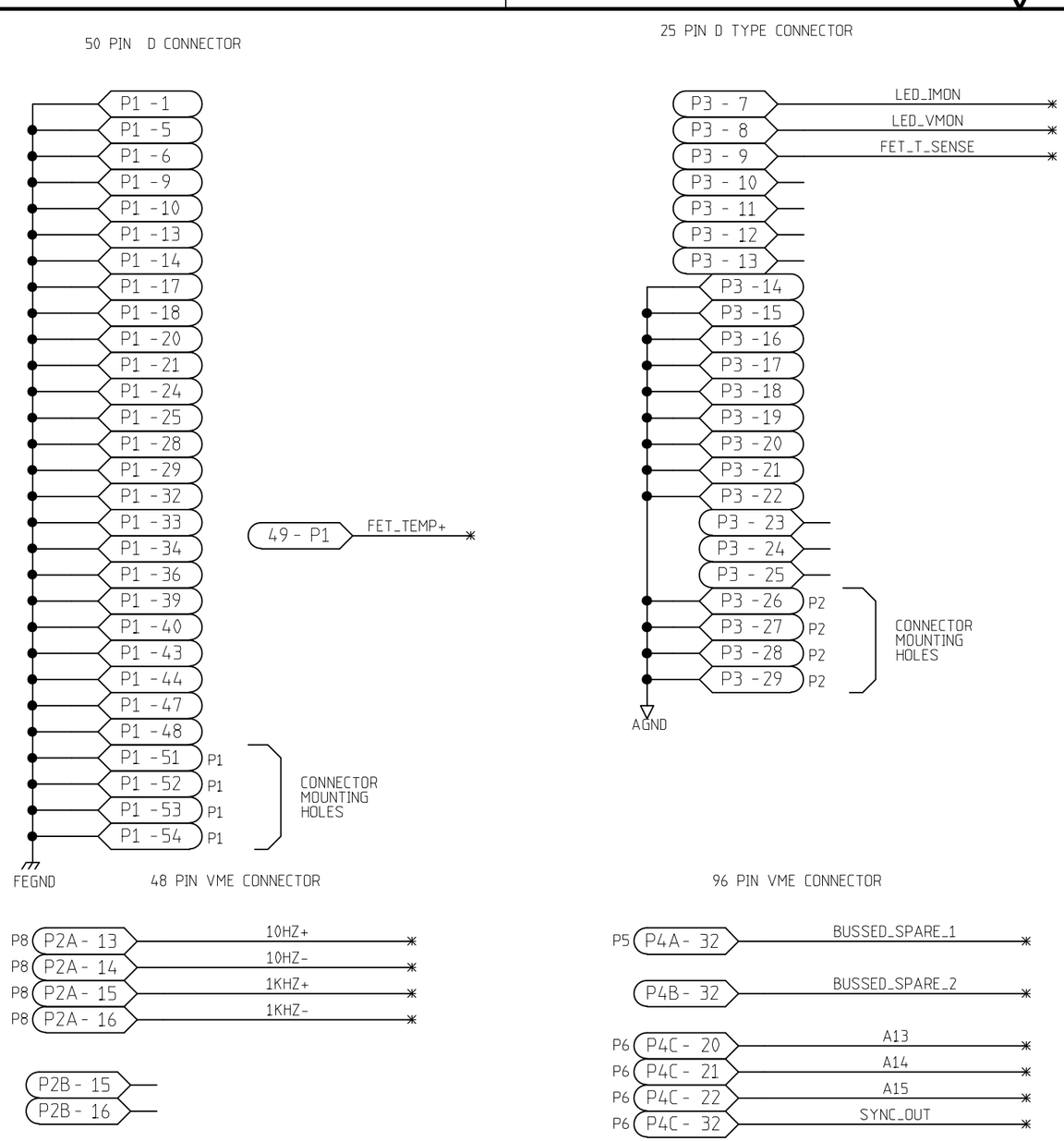


LEGENDS

| REVISIONS | | | |
|---|---|---|---|
| REV | DESCRIPTION | DATE | APPROVED |
| | | | |

| | NAME | DATE |
|---|---|---|
| ORIGINATOR | MERLE HALDEMAN | 11/18/98 |
| DRAWN | BRUCE MERKEL | 11/18/98 |
| CHECKED | TOM CRENNA | 12/9/98 |
| APPROVED | | |

FERMILAB PPD/ETT/ES CDMS (E-891)
ZIP MODULE
MISC. CONNECTORS

| SIZE | FSCM NO. | DWG. NO. | REV |
|---|---|---|---|
| B | | | |
| SCALE | | SHEET 1-1 | |

| REVISIONS | | | |
|---|---|---|---|
| REV | DESCRIPTION | DATE | APPROVED |
| 0 | NAME CHANGE TO MATCH BACKPLANE | 7/27/99 | BDM |

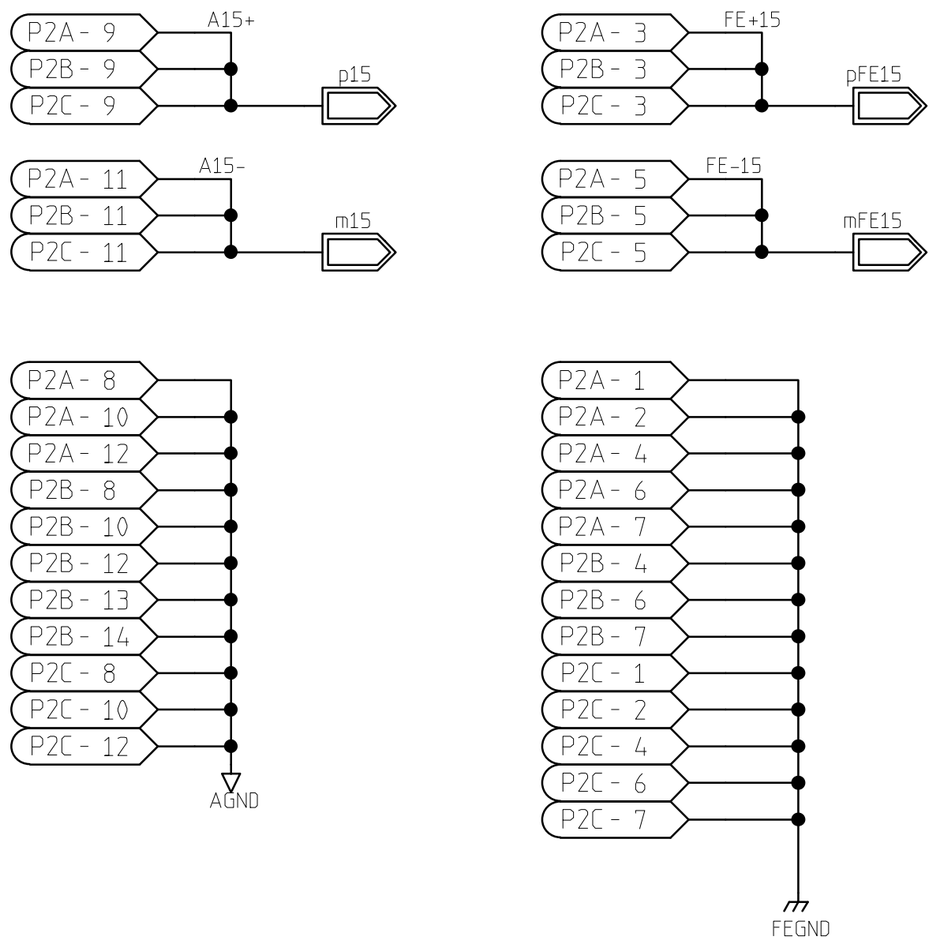


| | NAME | DATE |
|---|---|---|
| ORIGINATOR | MERLE HALDEMAN | 10/8/98 |
| DRAWN | BRUCE MERKEL | 10/8/98 |
| CHECKED | TOM CRENNA | 1/8/99 |
| APPROVED | | |

FERMILAB PPD/ETT/ES CDMS (E-891)
ZIP MODULE
P2 BACKPLANE POWER CONNECTION

| SIZE | FSCM NO. | DWG. NO. | REV |
|---|---|---|---|
| A | | | |

| SCALE | | SHEET 1-2 |
|---|---|---|

# P4
# (96 PIN CONNECTOR)

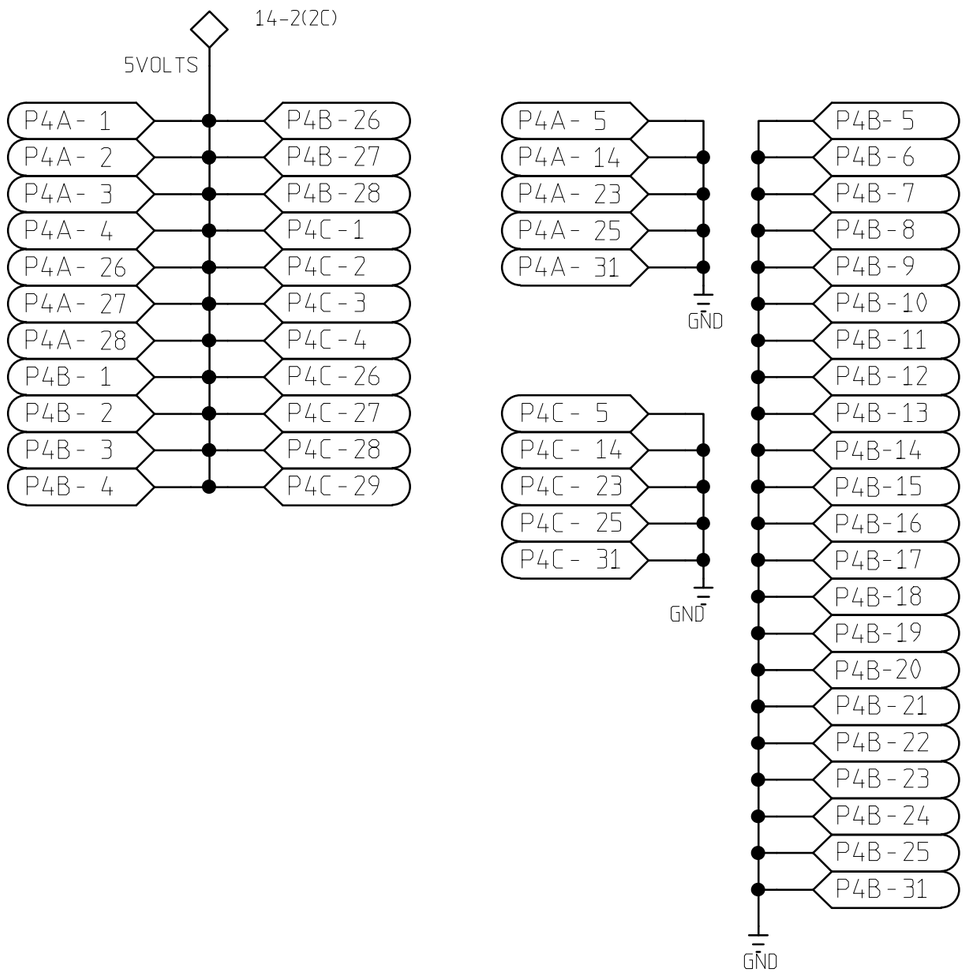


REVISIONS

| REV | DESCRIPTION | DATE | APPROVED |
|---|---|---|---|
| 0 | NAME CHANGED TO MATCH BACKPLANE | 7/27/99 | BDM |

| | NAME | DATE |
|---|---|---|
| ORIGINATOR | MERLE HALDEMAN | 10/8/98 |
| DRAWN | BRUCE MERKEL | 10/8/98 |
| CHECKED | TOM CRENNA | 1/8/99 |
| APPROVED | | |

FERMILAB PPD/ETT/ES CDMS (E-891)
ZIP MODULE
P4 BACKPLANE POWER CONNECTION

| SIZE | FSCM NO. | DWG. NO. | REV |
|---|---|---|---|
| A | | | |

SCALE | SHEET 1-3

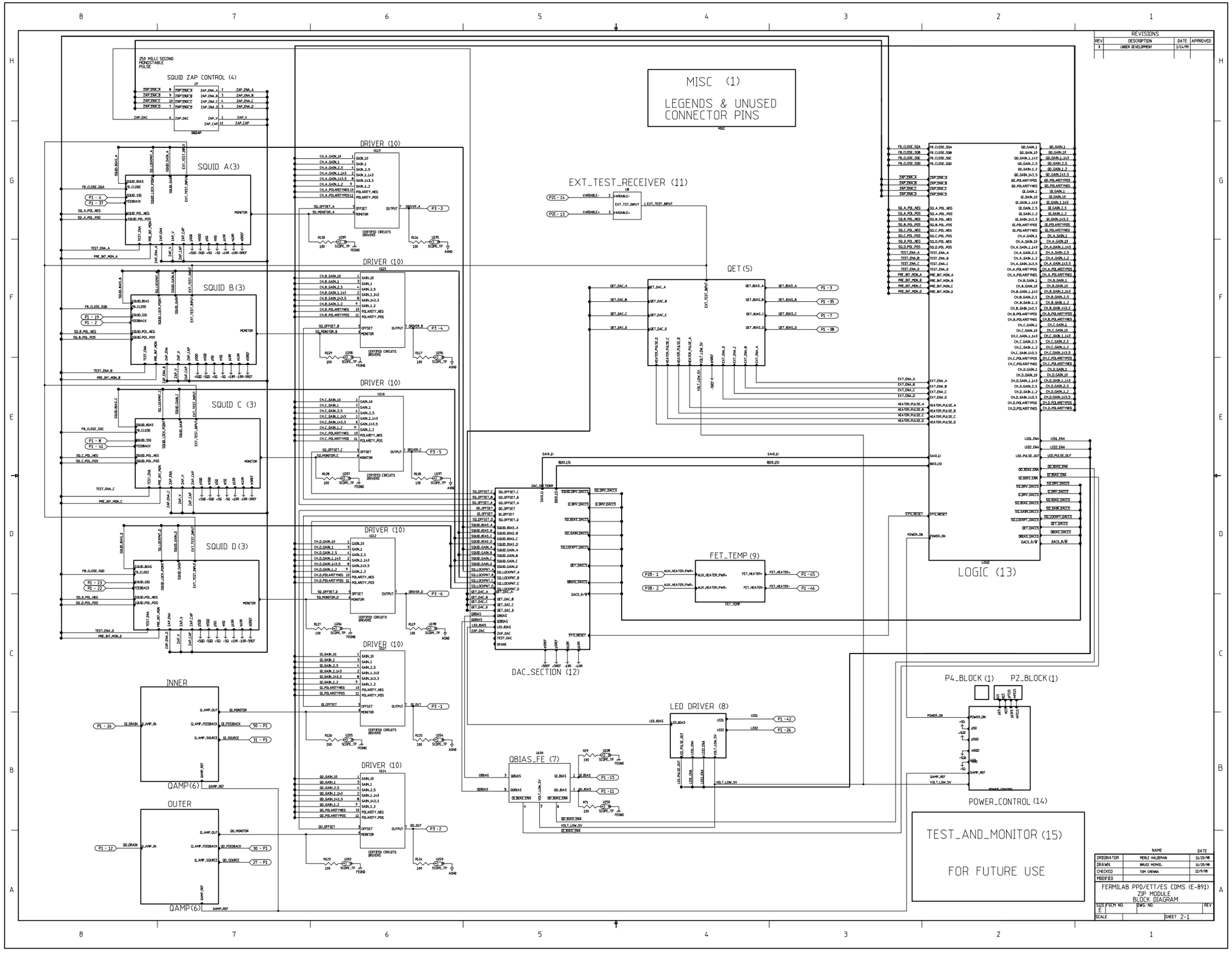


| REVISIONS | | | |
|---|---|---|---|
| REV | DESCRIPTION | DATE | APPROVED |
| 1 | UNDER DEVELOPMENT | 1/16/99 | |

| | NAME | DATE |
|---|---|---|
| ORIGINATOR | MERLE HALDEMAN | 11/20/98 |
| DRAWN | BRUCE MERKEL | 11/20/98 |
| CHECKED | TOM CHEMNA | 12/9/98 |
| MODIFIED | | |

FERMILAB PPD/ETT/ES CDMS (E-891)
ZIP MODULE
BLOCK DIAGRAM

| SIZE | FSCM NO. | DWG. NO. | REV |
|---|---|---|---|
| E | | | |
| SCALE | | SHEET 2-1 | |

| REVISIONS | | | |
|---|---|---|---|
| REV | DESCRIPTION | DATE | APPROVED |
| | | | |

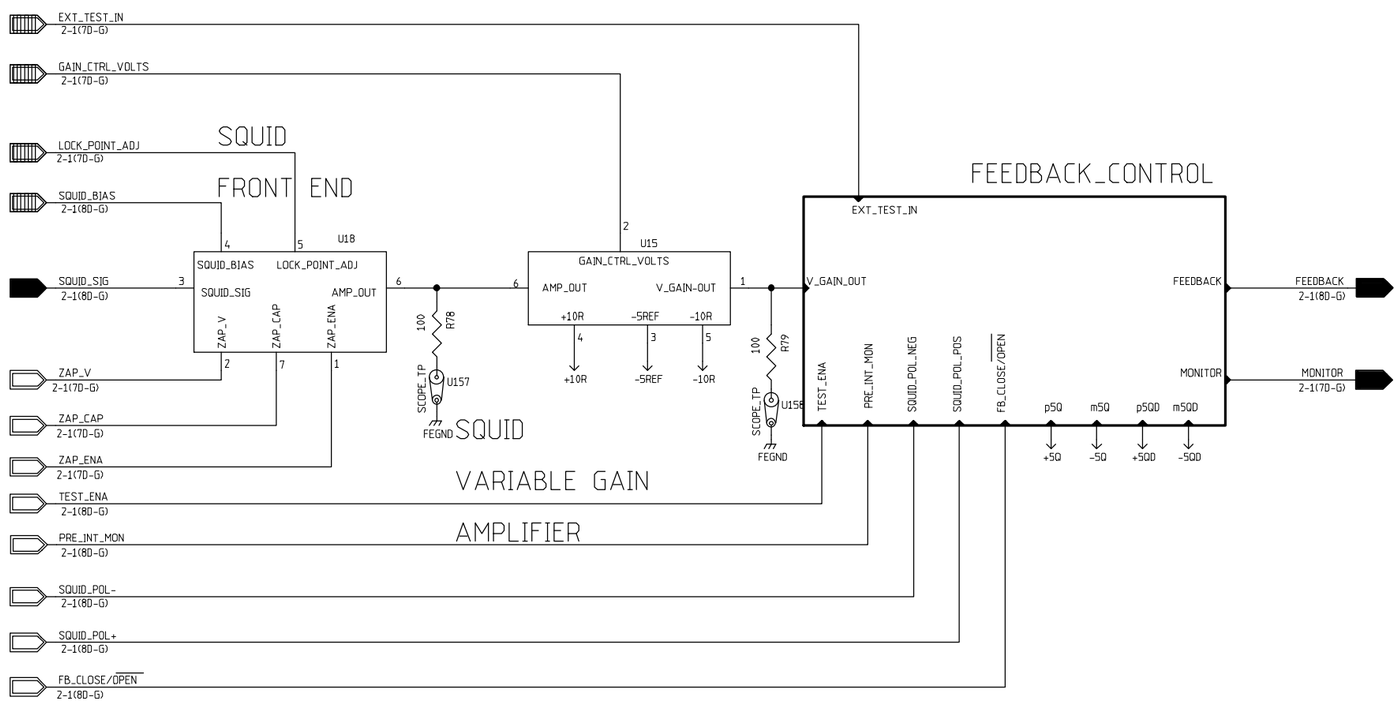


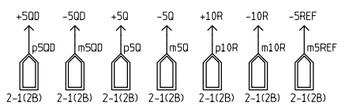


| | NAME | DATE |
|---|---|---|
| ORIGINATOR | MERLE HALDEMAN | 11/17/98 |
| DRAWN | BRUCE MERKEL | 11/17/98 |
| CHECKED | TOM CRENNA | 1/6/99 |
| APPROVED | | |

FERMILAB PPD/ETT/ES CDMS (E-891)
ZIP MODULE
SQUID BLOCK DIAGRAM

| SIZE | FSCM NO. | DWG. NO. | REV |
|---|---|---|---|
| C | | | |
| SCALE | | SHEET 3-1 | |

| REVISIONS | | | |
|---|---|---|---|
| REV | DESCRIPTION | DATE | APPROVED |
| | | | |

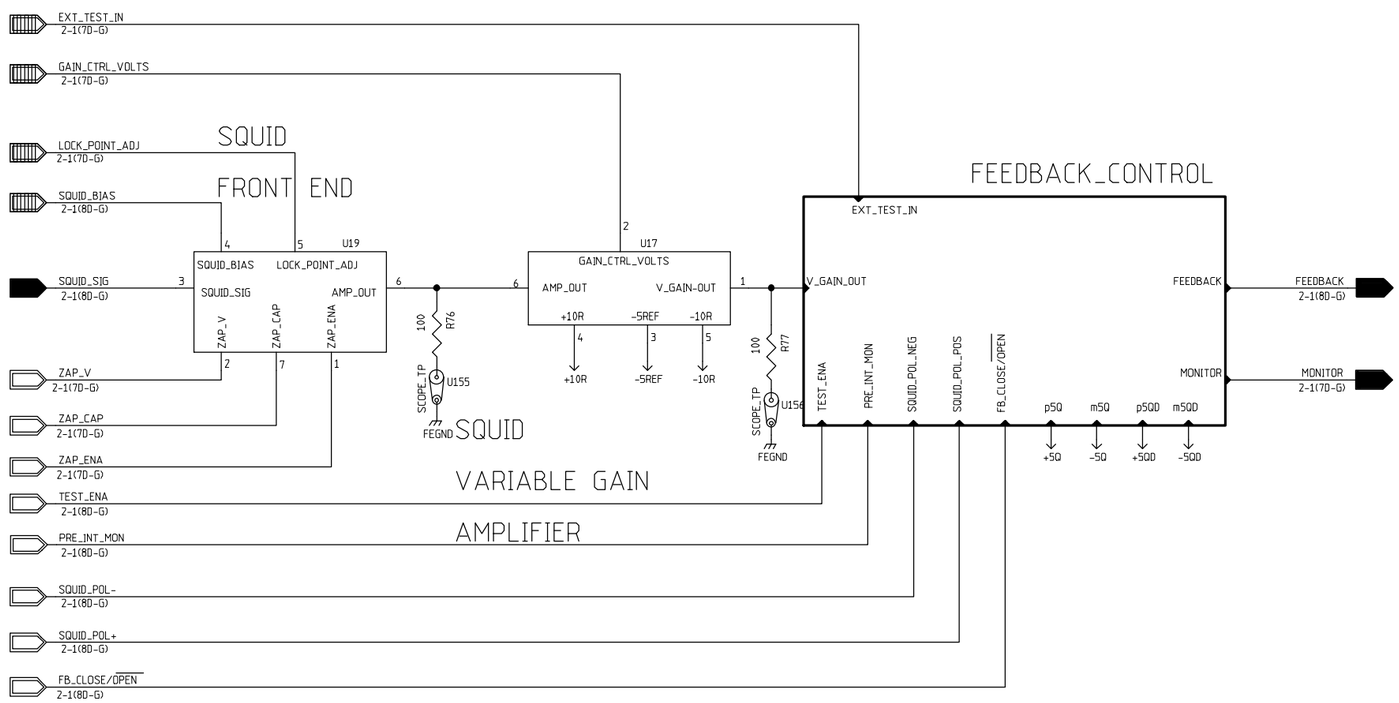


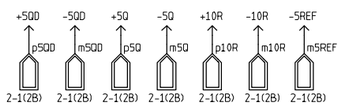


| | NAME | DATE |
|---|---|---|
| ORIGINATOR | MERLE HALDEMAN | 11/17/98 |
| DRAWN | BRUCE MERKEL | 11/17/98 |
| CHECKED | TOM CRENNA | 1/6/99 |
| APPROVED | | |

FERMILAB PPD/ETT/ES CDMS (E-891)
ZIP MODULE
SQUID BLOCK DIAGRAM

| SIZE | FSCM NO. | DWG. NO. | REV |
|---|---|---|---|
| C | | | |
| SCALE | | SHEET 3-1 | |

| REVISIONS | | | |
|---|---|---|---|
| REV | DESCRIPTION | DATE | APPROVED |
| | | | |

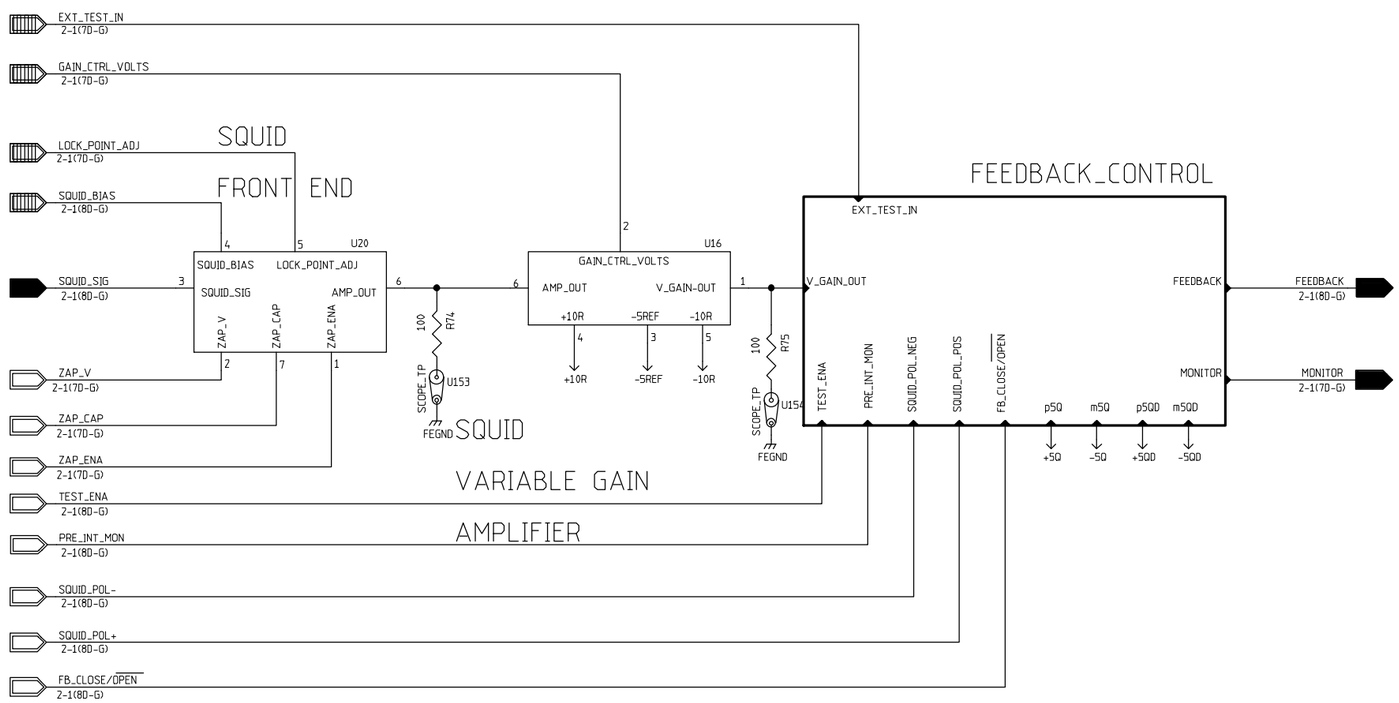


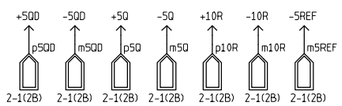


| | NAME | DATE |
|---|---|---|
| ORIGINATOR | MERLE HALDEMAN | 11/17/98 |
| DRAWN | BRUCE MERKEL | 11/17/98 |
| CHECKED | TOM CRENNA | 1/6/99 |
| APPROVED | | |

FERMILAB PPD/ETT/ES CDMS (E-891)
ZIP MODULE
SQUID BLOCK DIAGRAM

| SIZE | FSCM NO. | DWG. NO. | REV |
|---|---|---|---|
| C | | | |
| SCALE | | SHEET 3-1 | |

| REVISIONS | | | |
|---|---|---|---|
| REV | DESCRIPTION | DATE | APPROVED |
| | | | |

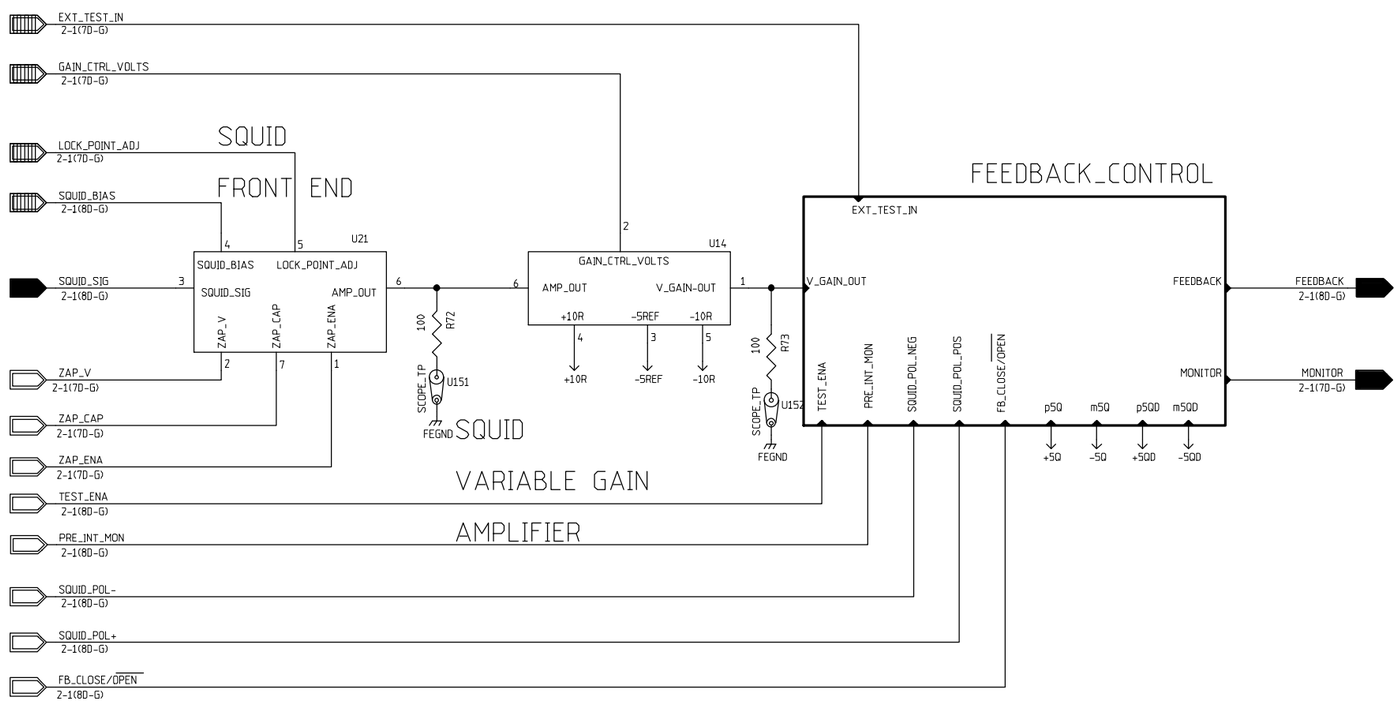


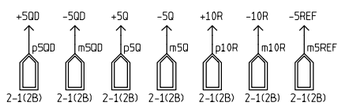


| | NAME | DATE |
|---|---|---|
| ORIGINATOR | MERLE HALDEMAN | 11/17/98 |
| DRAWN | BRUCE MERKEL | 11/17/98 |
| CHECKED | TOM CRENNA | 1/6/99 |
| APPROVED | | |

FERMILAB PPD/ETT/ES CDMS (E-891)
ZIP MODULE
SQUID BLOCK DIAGRAM

| SIZE | FSCM NO. | DWG. NO. | REV |
|---|---|---|---|
| C | | | |
| SCALE | | SHEET 3-1 | |

| REVISIONS | | | |
|---|---|---|---|
| REV | DESCRIPTION | DATE | APPROVED |
| | | | |

RELAY SHOWN IN
DEENERGIZED STATE

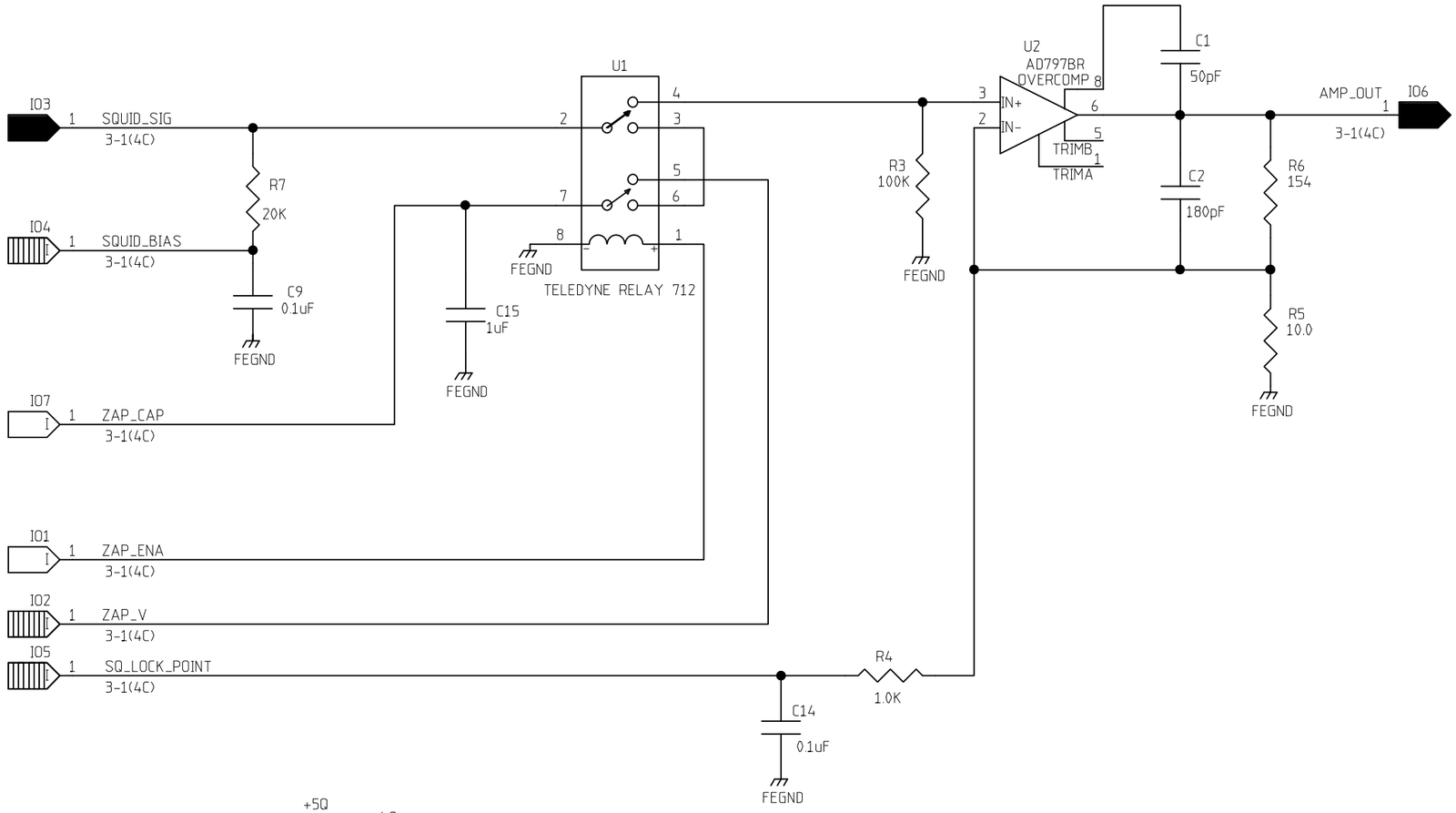


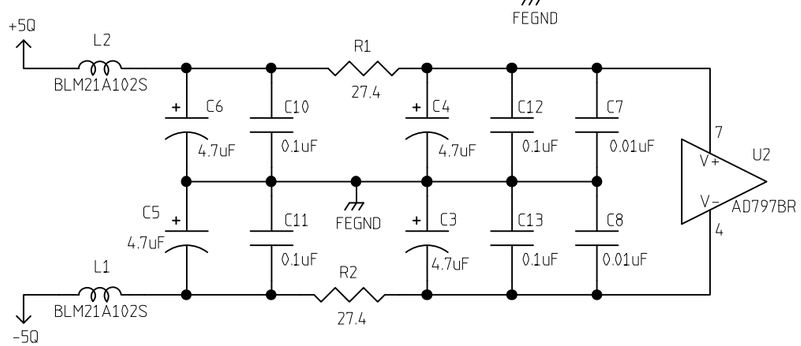


| | NAME | DATE |
|---|---|---|
| ORIGINATOR | MERLE HALDEMAN | 11/11/98 |
| DRAWN | BRUCE MERKEL | 11/11/98 |
| CHECKED | TOM CRENNA | 1/6/99 |
| APPROVED | | |

FERMILAB PPD/ETT/ES CDMS (E-891)
ZIP MODULE
SQUID FRONT END

| SIZE | FSCM NO. | DWG. NO. | REV |
|---|---|---|---|
| B | | | |
| SCALE | | SHEET 3-2 | |

| REVISIONS | | | |
|---|---|---|---|
| REV | DESCRIPTION | DATE | APPROVED |
| 1 | MODIFIED TO REMOVE OSCILLATIONS | 5/19/99 | BDM |

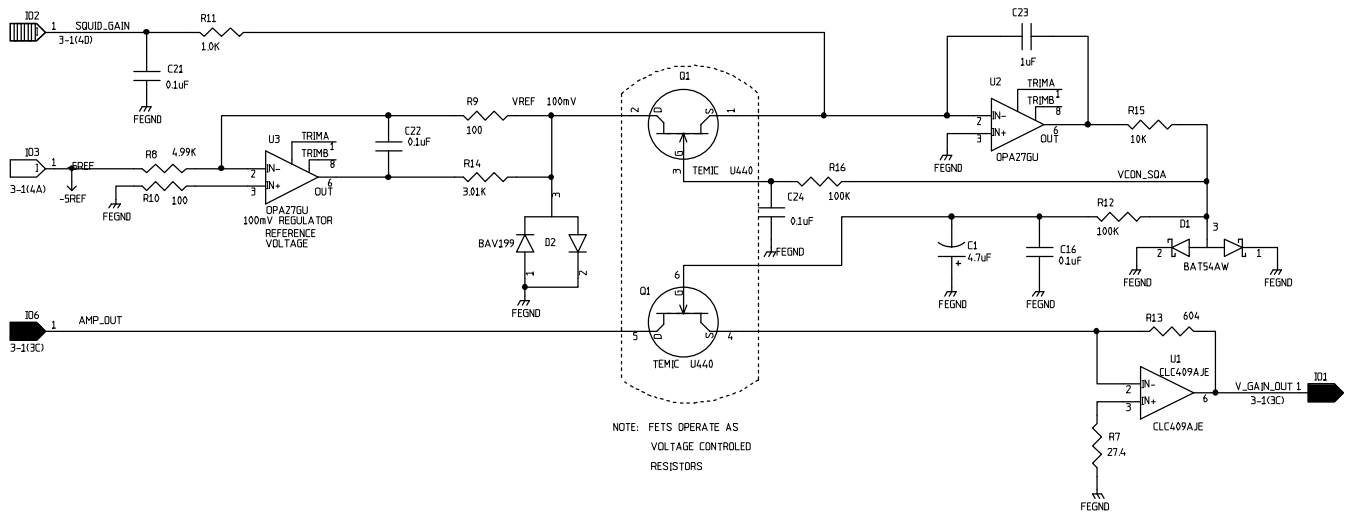


NOTE: FETS OPERATE AS VOLTAGE CONTROLED RESISTORS

VARIABLE GAIN AMPLIFIER

$GAIN = R13 \times \frac{GVC}{100}$

GCV = GAIN_CONTROL_VOLTAGE IN VOLTS

R13 IN OHMS

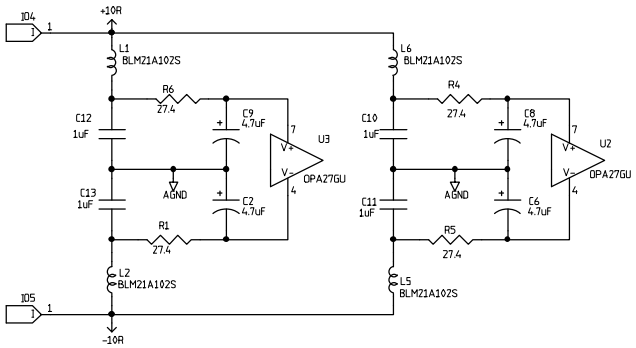


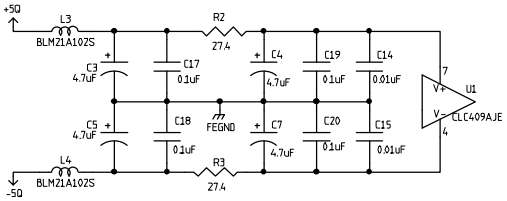


| | NAME | DATE |
|---|---|---|
| ORIGINATOR | MERLE HALDEMAN | 11/13/98 |
| DRAWN | BRUCE MERKEL | 11/13/98 |
| CHECKED | TOM CRENNA | 1/6/99 |
| APPROVED | | |

FERMILAB PPD/ETT/ES CDMS (E-891)
ZIP MODULE
SQUID VARIABLE GAIN AMP

| SIZE | FSCM NO. | DWG. NO. | REV |
|---|---|---|---|
| C | | | |
| SCALE | | SHEET 3-3 | |

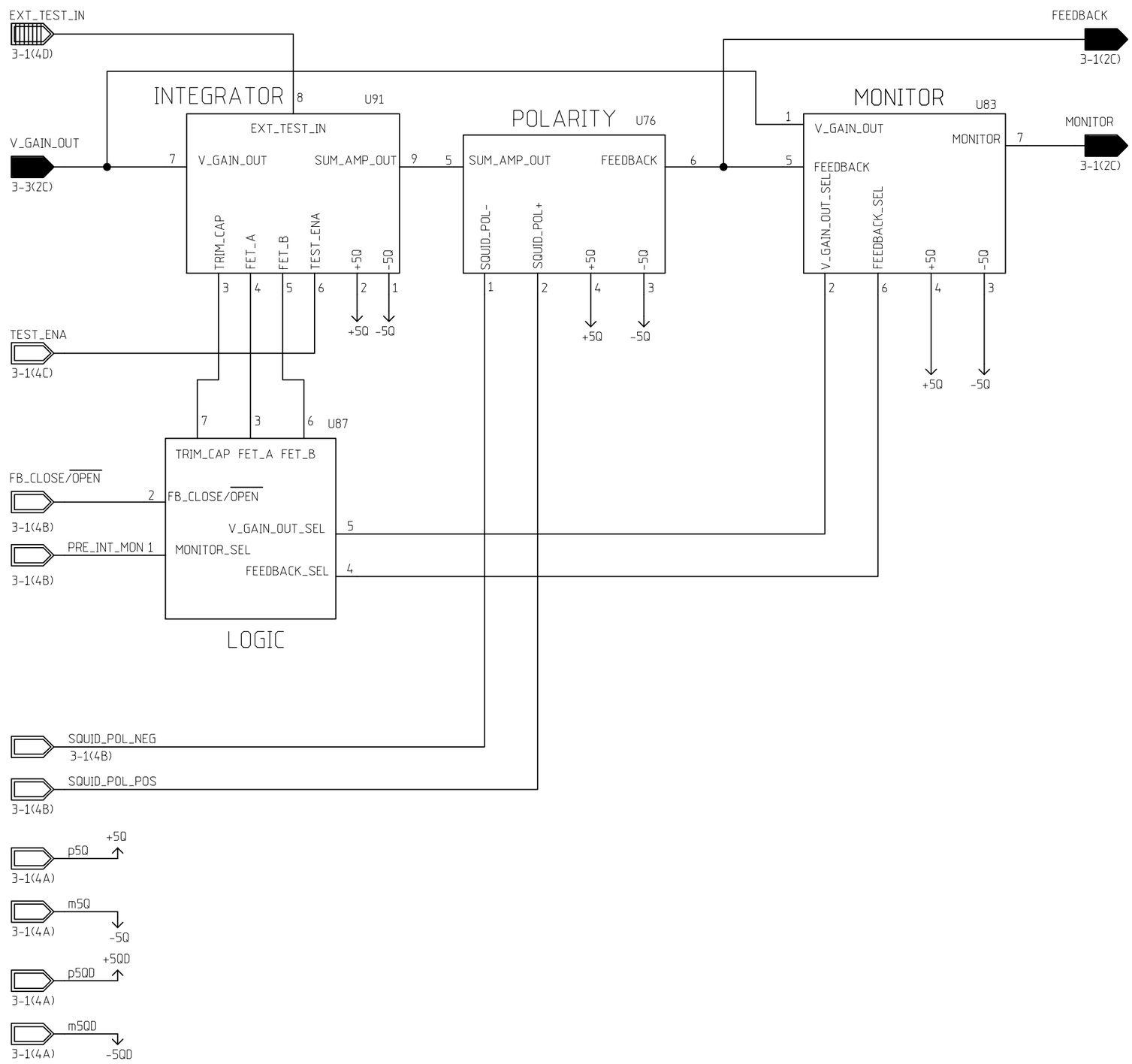


REVISIONS

| REV | DESCRIPTION | DATE | APPROVED |
|---|---|---|---|
| | | | |

| | NAME | DATE |
|---|---|---|
| ORIGINATOR | MERLE HALDEMAN | 11/13/98 |
| DRAWN | BRUCE MERKEL | 11/13/98 |
| CHECKED | TOM CRENNA | 1/6/99 |
| APPROVED | | |

FERMILAB PPD/ETT/ES CDMS (E-891)
ZIP MODULE
SQUID FEEDBACK CONTROL

| SIZE | FSCM NO. | DWG. NO. | REV |
|---|---|---|---|
| B | | | |

SCALE | SHEET 3-4

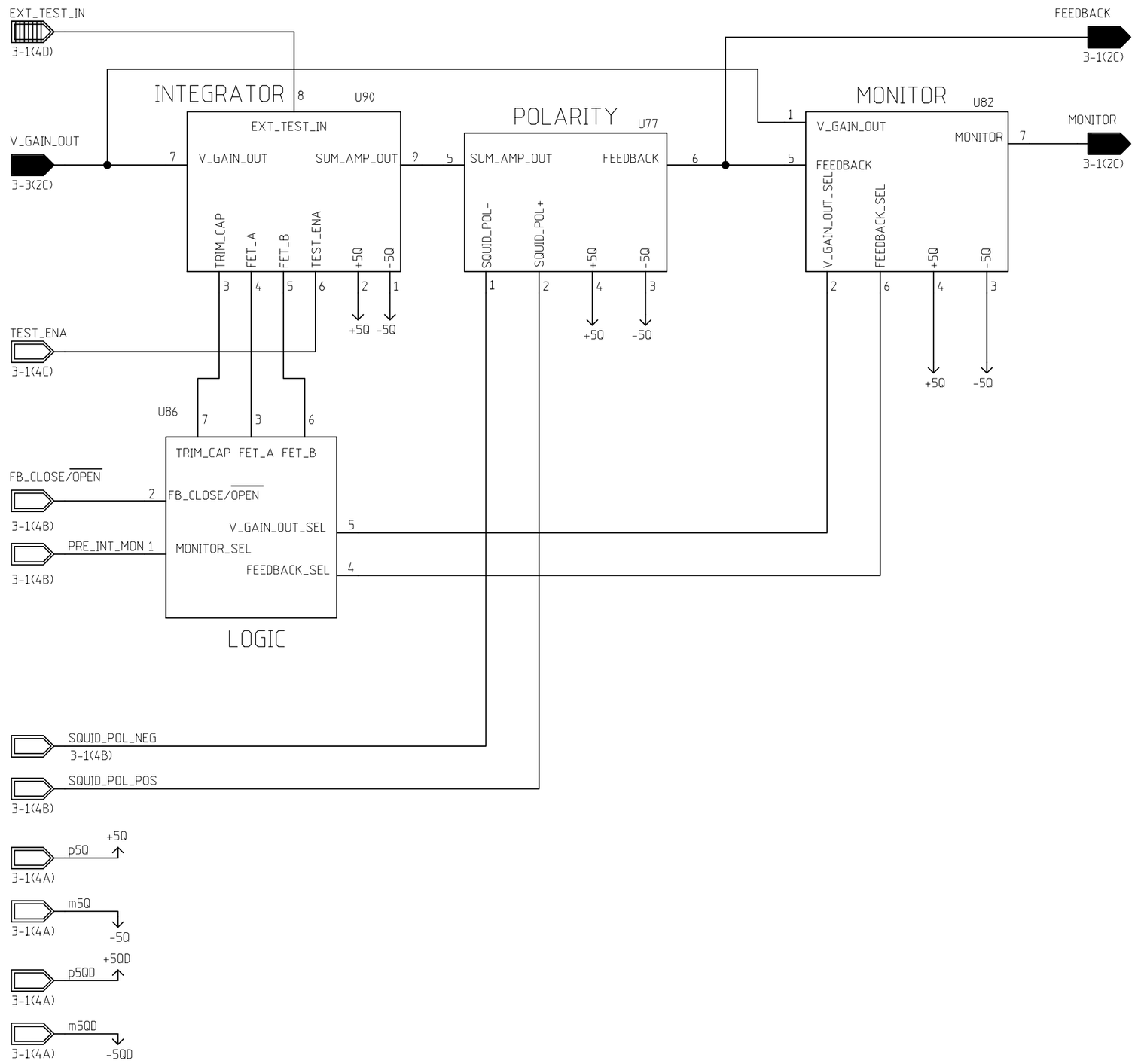


REVISIONS

| REV | DESCRIPTION | DATE | APPROVED |
|---|---|---|---|
| | | | |

| | NAME | DATE |
|---|---|---|
| ORIGINATOR | MERLE HALDEMAN | 11/13/98 |
| DRAWN | BRUCE MERKEL | 11/13/98 |
| CHECKED | TOM CRENNA | 1/6/99 |
| APPROVED | | |

FERMILAB PPD/ETT/ES CDMS (E-891)
ZIP MODULE
SQUID FEEDBACK CONTROL

| SIZE | FSCM NO. | DWG. NO. | REV |
|---|---|---|---|
| B | | | |

SCALE | SHEET 3-4

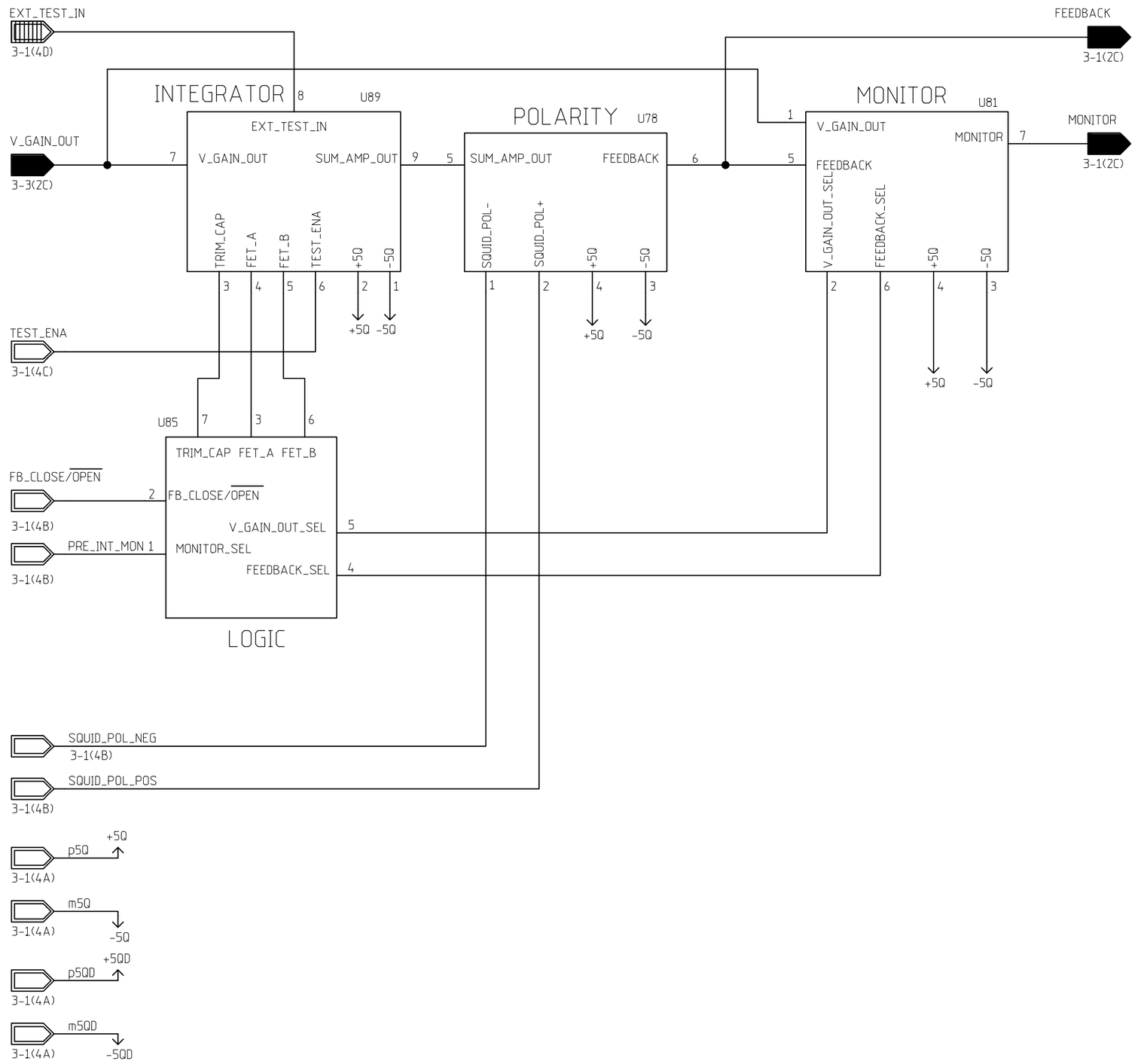


| REVISIONS | | | |
|---|---|---|---|
| REV | DESCRIPTION | DATE | APPROVED |
| | | | |

| | NAME | DATE |
|---|---|---|
| ORIGINATOR | MERLE HALDEMAN | 11/13/98 |
| DRAWN | BRUCE MERKEL | 11/13/98 |
| CHECKED | TOM CRENNA | 1/6/99 |
| APPROVED | | |

FERMILAB PPD/ETT/ES CDMS (E-891)
ZIP MODULE
SQUID FEEDBACK CONTROL

| SIZE | FSCM NO. | DWG. NO. | REV |
|---|---|---|---|
| B | | | |

SCALE | SHEET 3-4

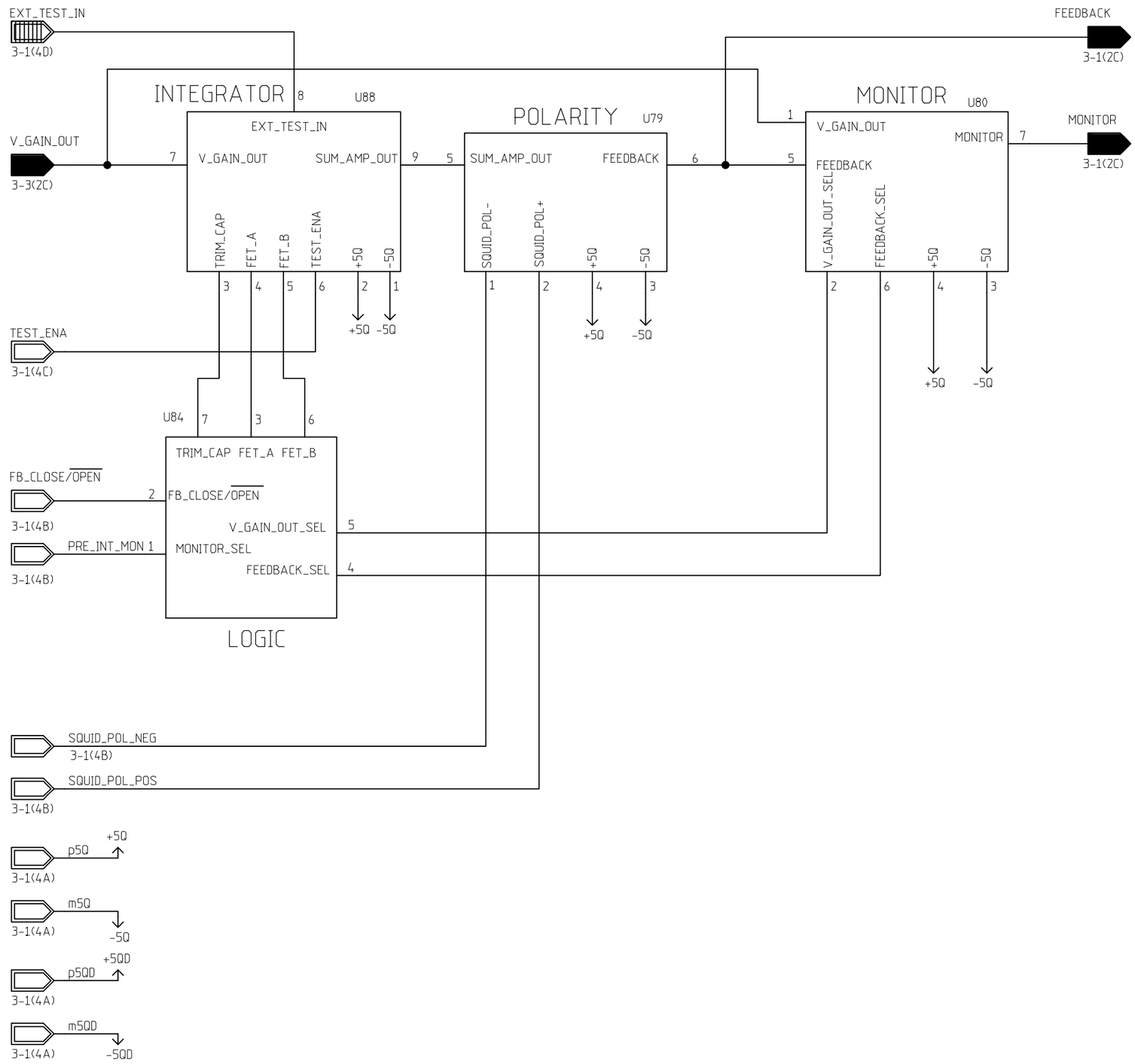


| REVISIONS | | | |
|---|---|---|---|
| REV | DESCRIPTION | DATE | APPROVED |
| | | | |

| | NAME | DATE |
|---|---|---|
| ORIGINATOR | MERLE HALDEMAN | 11/13/98 |
| DRAWN | BRUCE MERKEL | 11/13/98 |
| CHECKED | TOM CRENNA | 1/6/99 |
| APPROVED | | |

FERMILAB PPD/ETT/ES CDMS (E-891)
ZIP MODULE
SQUID FEEDBACK CONTROL

| SIZE | FSCM NO. | DWG. NO. | REV |
|---|---|---|---|
| B | | | |

SCALE | SHEET 3-4

| REVISIONS | | | |
|---|---|---|---|
| REV | DESCRIPTION | DATE | APPROVED |
| | | | |

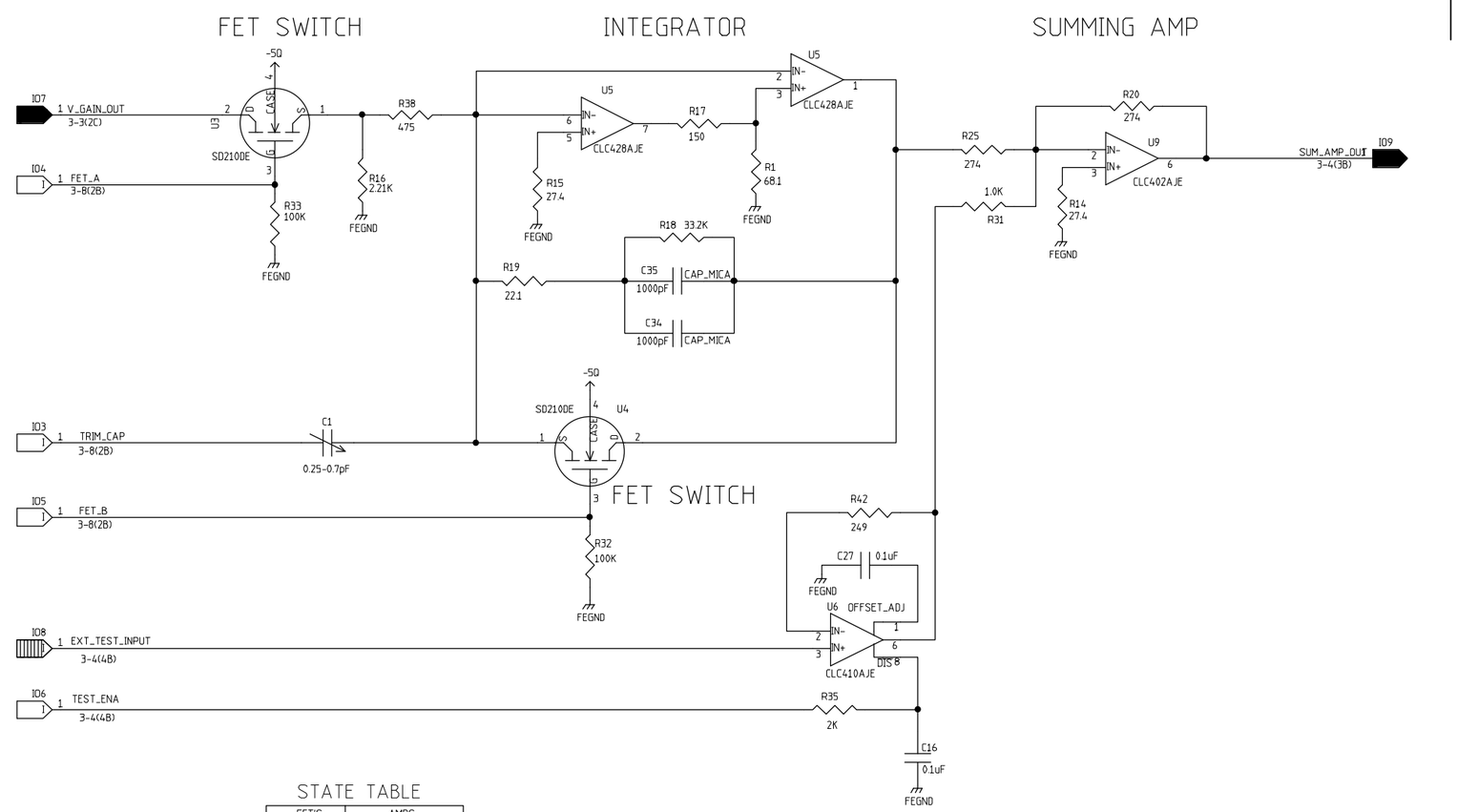


## STATE TABLE

| | FET'S | | AMPS | | |
|---|---|---|---|---|---|
| FB_O/C | U3 | U4 | U6 | U7 | U8 |
| LOW | O | C | E | D | E |
| HI | C | O | D | E | D |

O = OPEN C = CLOSED
E = ENABLE D = DISABLE

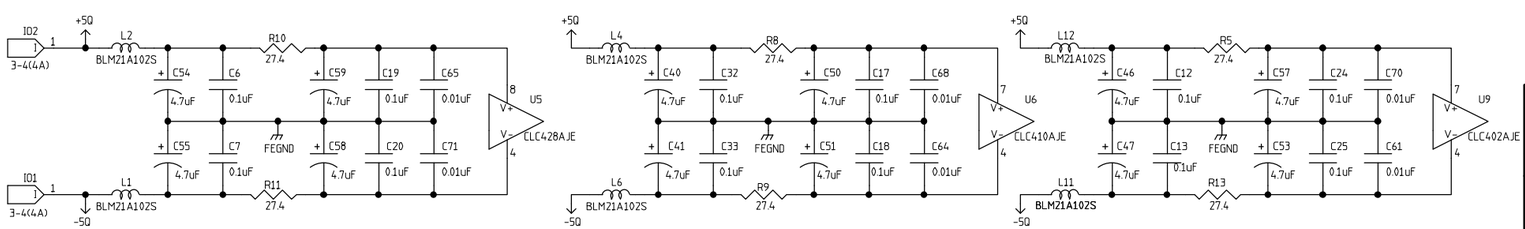


| | NAME | DATE |
|---|---|---|
| ORIGINATOR | MERLE HALDEMAN | 11/13/98 |
| DRAWN | BRUCE MERKEL | 11/13/98 |
| CHECKED | TOM CRENNA | 1/6/99 |
| APPROVED | | |

FERMILAB PPD/ETT/ES CDMS (E-891)
ZIP MODULE
SQUID FEEDBACK INTEGRATOR

| SIZE | FSCM NO. | DWG. NO. | REV |
|---|---|---|---|
| C | | | |
| SCALE | | SHEET 3-5 | |

| REVISIONS | | | |
|---|---|---|---|
| REV | DESCRIPTION | DATE | APPROVED |
| | | | |

# POLARITY SELECTION

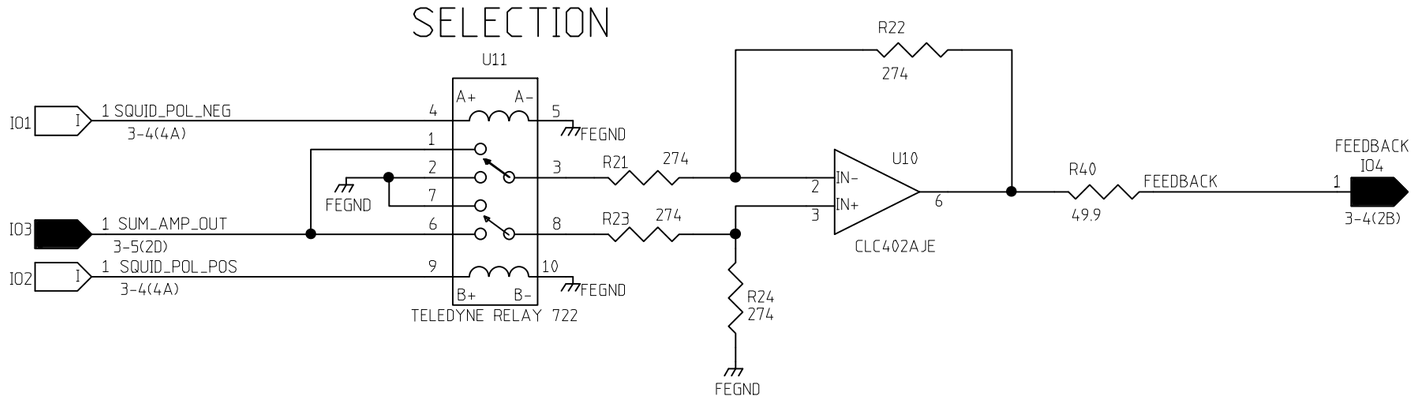


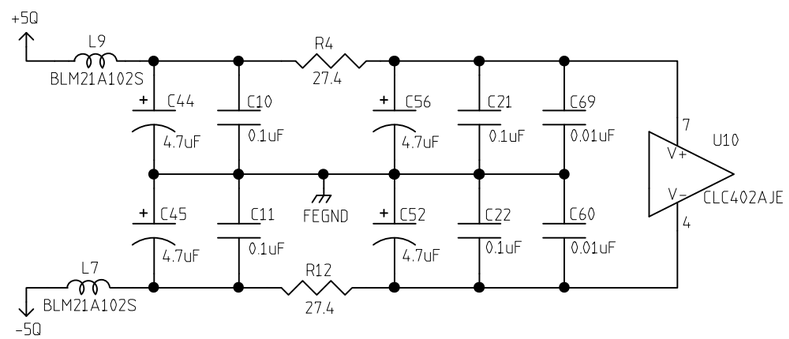


| | NAME | DATE |
|---|---|---|
| ORIGINATOR | MERLE HALDEMAN | 11/13/98 |
| DRAWN | BRUCE MERKEL | 11/13/98 |
| CHECKED | TOM CRENNA | 1/6/99 |
| APPROVED | | |

FERMILAB PPD/ETT/ES CDMS (E-891)
ZIP MODULE
SQUID FEEDBACK POLARITY

| SIZE | FSCM NO. | DWG. NO. | REV |
|---|---|---|---|
| B | | | |

SCALE | SHEET 3-6

| REVISIONS | | | |
|---|---|---|---|
| REV | DESCRIPTION | DATE | APPROVED |
| | | | |

# MONITOR SELECTION

## AMPLIFIERS

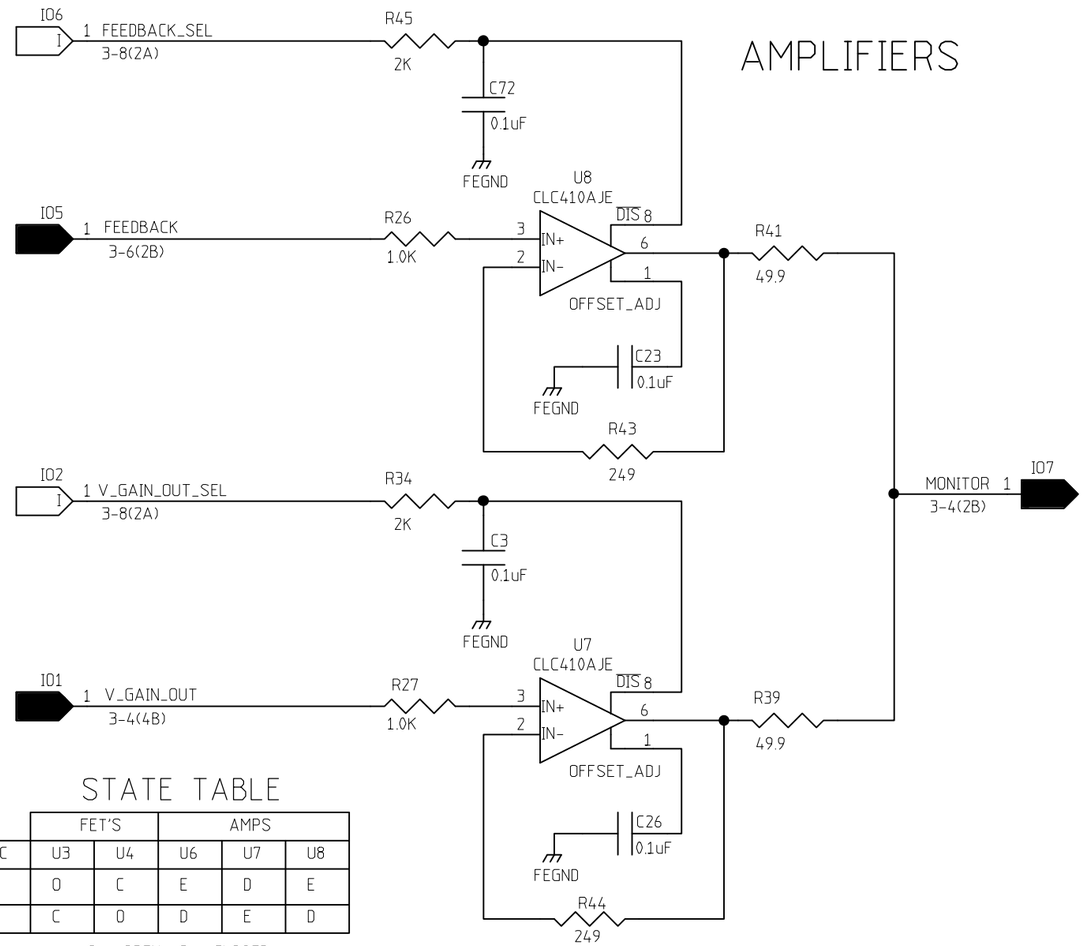


## STATE TABLE

| | FET'S | | AMPS | | |
|---|---|---|---|---|---|
| FB_O/C | U3 | U4 | U6 | U7 | U8 |
| LOW | O | C | E | D | E |
| HI | C | O | D | E | D |

O = OPEN C = CLOSED
E = ENABLE D = DISABLE

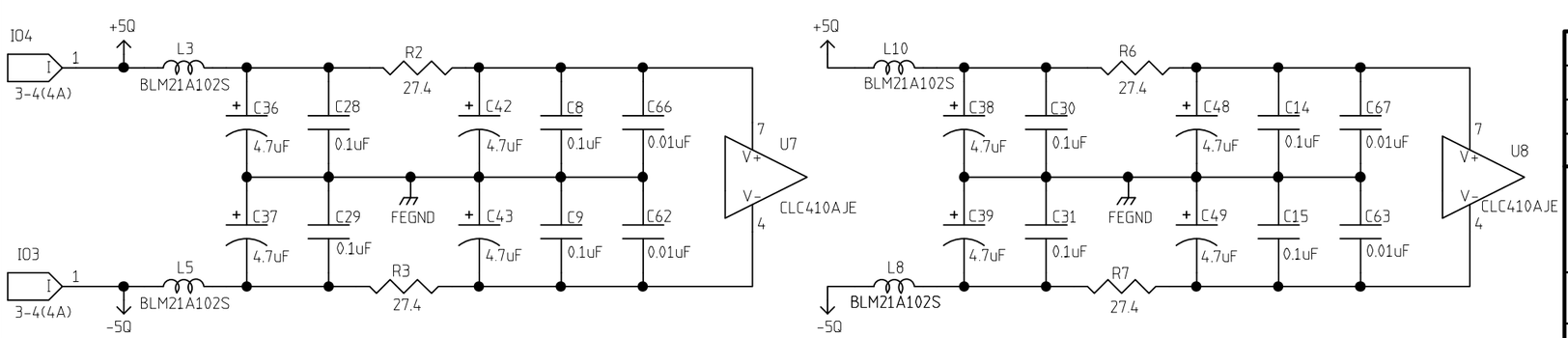


| | NAME | DATE |
|---|---|---|
| ORIGINATOR | MERLE HALDEMAN | 11/13/98 |
| DRAWN | BRUCE MERKEL | 11/13/98 |
| CHECKED | TOM CRENNA | 1/6/99 |
| APPROVED | | |

FERMILAB PPD/ETT/ES CDMS (E-891)
ZIP MODULE
SQUID FEEDBACK MONITOR

| SIZE | FSCM NO. | DWG. NO. | REV |
|---|---|---|---|
| B | | | |
| SCALE | | SHEET 3-7 | |

| REVISIONS | | | |
|---|---|---|---|
| REV | DESCRIPTION | DATE | APPROVED |
| | | | |

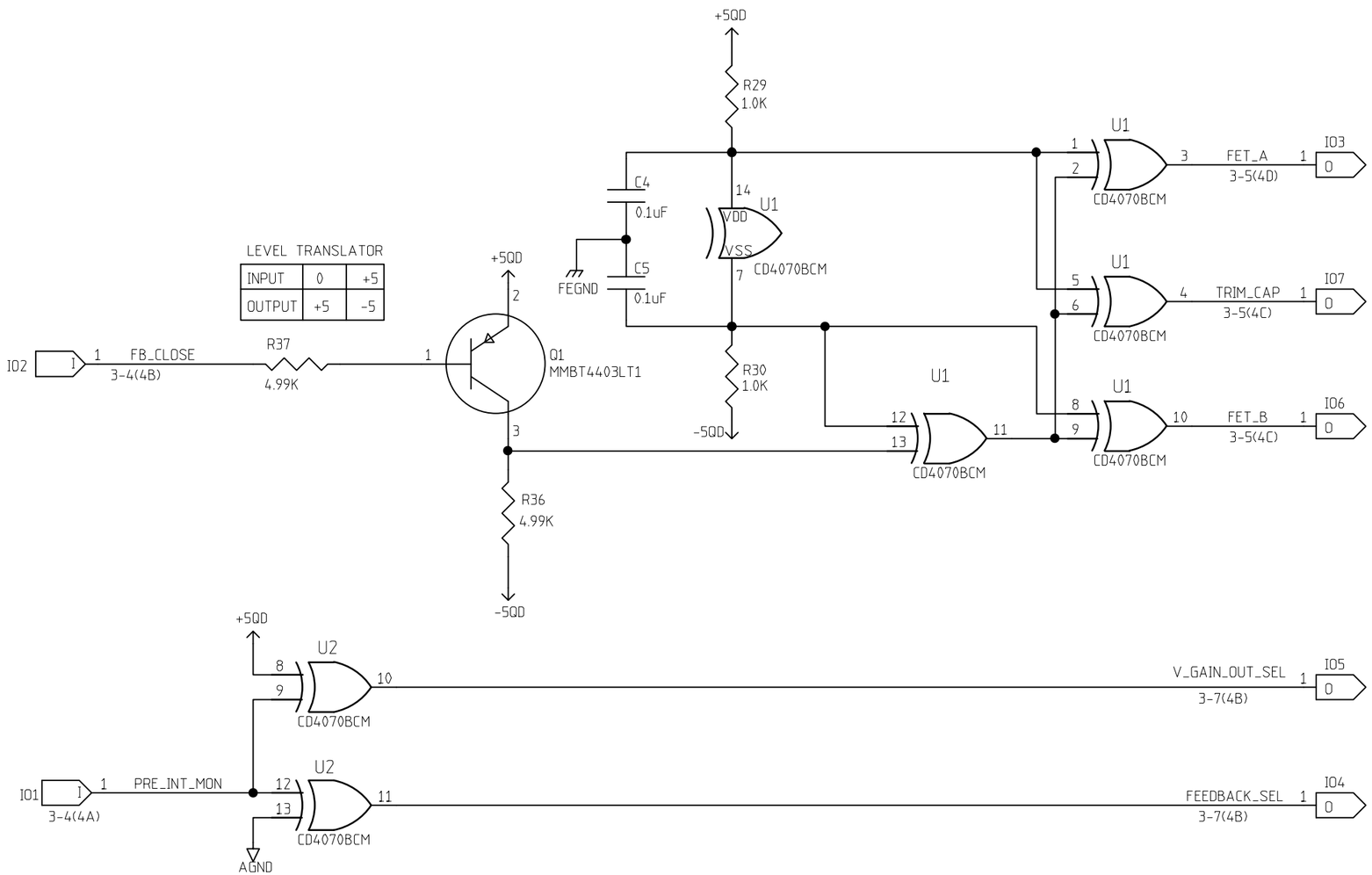


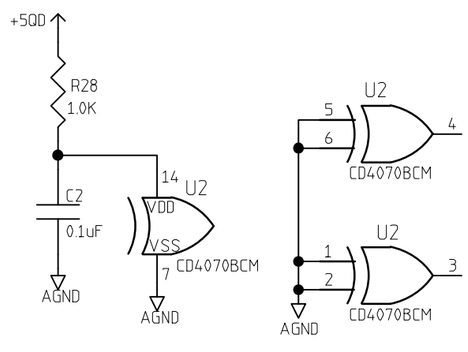


NOTE: U1 POWER SHOWN ABOVE

| | NAME | DATE |
|---|---|---|
| ORIGINATOR | MERLE HALDEMAN | 11/16/98 |
| DRAWN | BRUCE MERKEL | 11/16/98 |
| CHECKED | TOM CRENNA | 1/6/99 |
| APPROVED | | |

FERMILAB PPD/ETT/ES CDMS (E-891)
ZIP MODULE
SQUID FEEDBACK LOGIC

| SIZE | FSCM NO. | DWG. NO. | REV |
|---|---|---|---|
| B | | | |
| SCALE | | SHEET 3-8 | |

| REVISIONS | | | |
|---|---|---|---|
| REV | DESCRIPTION | DATE | APPROVED |
| | | | |

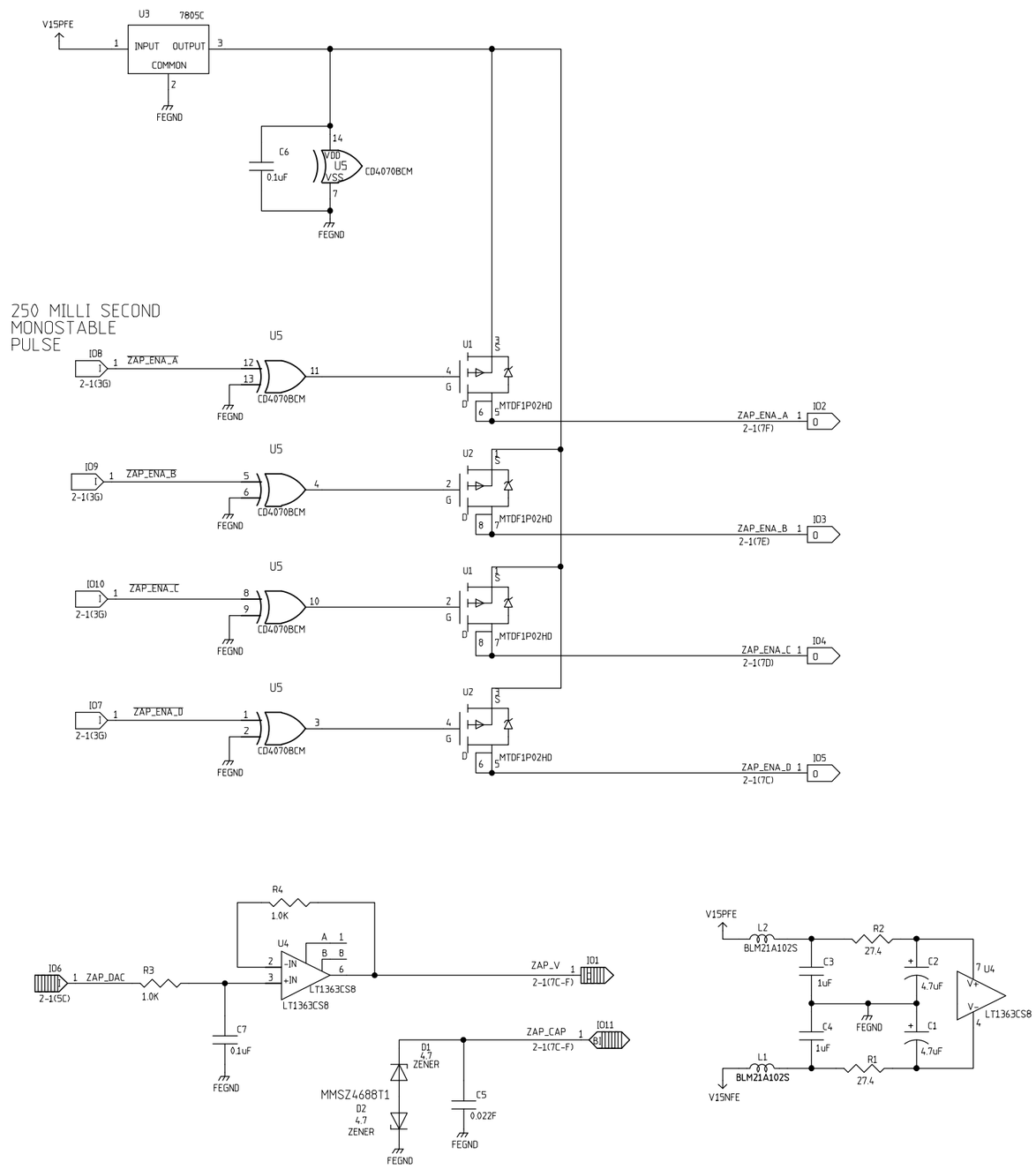


REVISED 1/11/99 BRUCE MERKEL

| | NAME | DATE |
|---|---|---|
| ORIGINATOR | MERLE HALDEMAN | 11/17/98 |
| DRAWN | BRUCE MERKEL | 11/17/98 |
| CHECKED | TOM CRENNA | 1/6/99 |
| APPROVED | | |

FERMILAB PPD/ETT/ES CDMS (E-891)
ZIP MODULE
SQUID ZAP CONTROL

| SIZE | FSCM NO. | DWG. NO. | REV |
|---|---|---|---|
| C | | | |
| SCALE | | SHEET 4-1 | |

| REVISIONS | | | |
|---|---|---|---|
| REV | DESCRIPTION | DATE | APPROVED |
| 0 | UNDER DEVELOPMENT | 1-20-99 | |

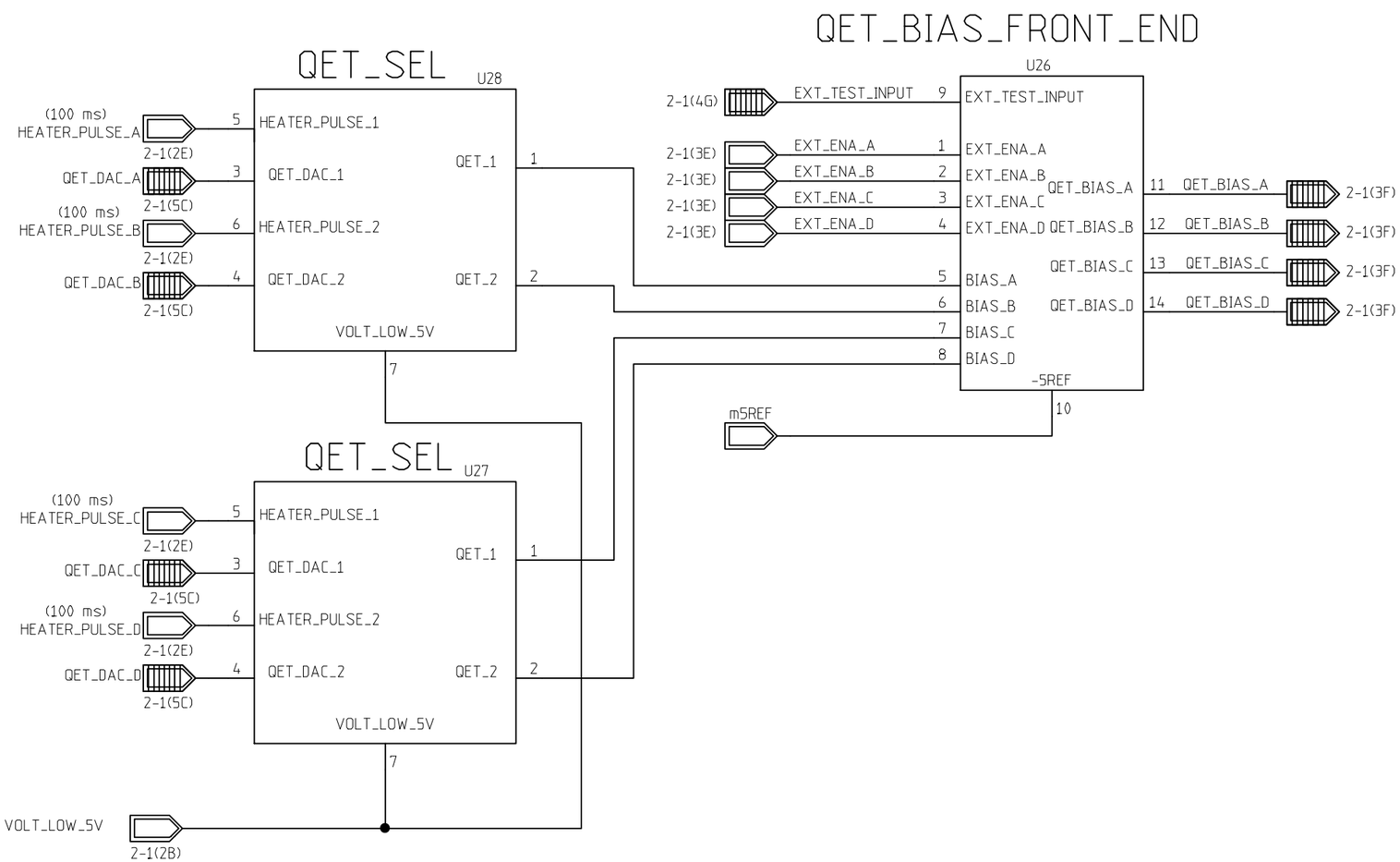


| | NAME | DATE |
|---|---|---|
| ORIGINATOR | MERLE HALDEMAN | 11/16/98 |
| DRAWN | BRUCE MERKEL | 11/16/98 |
| CHECKED | TOM CRENNA | 1/6/99 |
| APPROVED | | |

FERMILAB PPD/ETT/ES CDMS (E-891)
ZIP MODULE
QET BLOCK DIAGRAM

| SIZE | FSCM NO. | DWG. NO. | REV |
|---|---|---|---|
| B | | | |

SCALE | SHEET 5-1

| REVISIONS | | | |
|---|---|---|---|
| REV | DESCRIPTION | DATE | APPROVED |
| | | | |

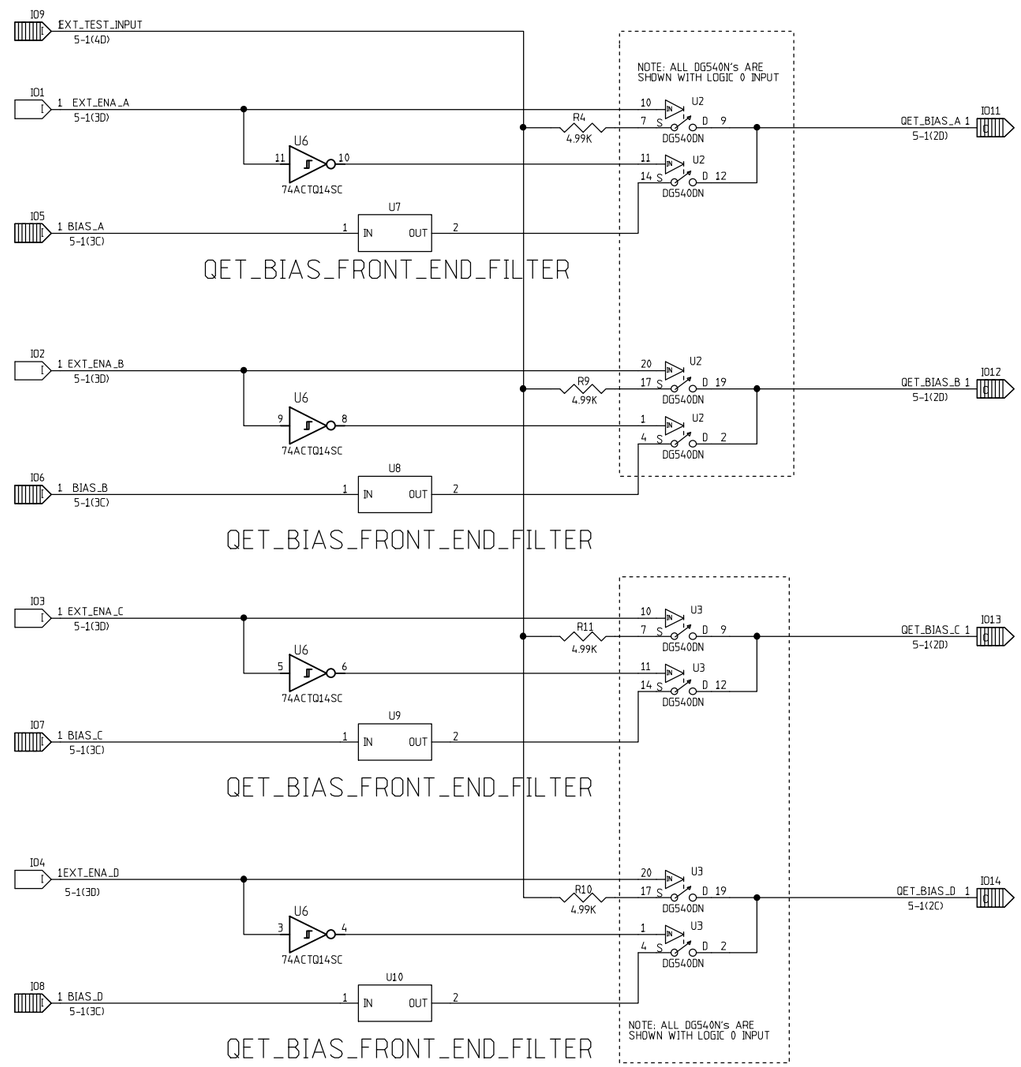


| | NAME | DATE |
|---|---|---|
| ORIGINATOR | MERLE HALDEMAN | 11/16/98 |
| DRAWN | BRUCE MERKEL | 11/19/98 |
| CHECKED | TOM CRENNA | 1/6/99 |
| APPROVED | | |

FERMILAB PPD/EET/ES CDMS (E-891)

# ZIP MODULE

QET_BIAS_FRONT_END

| SIZE | FSCM NO. | DWG. NO. | REV |
|---|---|---|---|
| C | | | |
| SCALE | | SHEET 5-2 | |

| REVISIONS | | | |
|---|---|---|---|
| REV | DESCRIPTION | DATE | APPROVED |
| | | | |

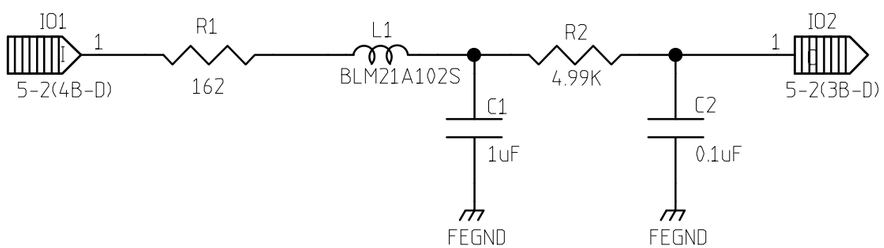


| | NAME | DATE |
|---|---|---|
| ORIGINATOR | MERLE HALDEMAN | 11/16/98 |
| DRAWN | BRUCE MERKEL | 11/19/98 |
| CHECKED | TOM CRENNA | 1/6/99 |
| APPROVED | | |

FERMILAB PPD/EET/ES CDMS (E-891)

# ZIP MODULE

QET_BIAS_FRONT_END FILTER

| SIZE | FSCM NO. | DWG. NO. | REV |
|---|---|---|---|
| A | | | |

| SCALE | | SHEET 5-3 |
|---|---|---|

| REVISIONS | | | |
|---|---|---|---|
| REV | DESCRIPTION | DATE | APPROVED |
| | | | |

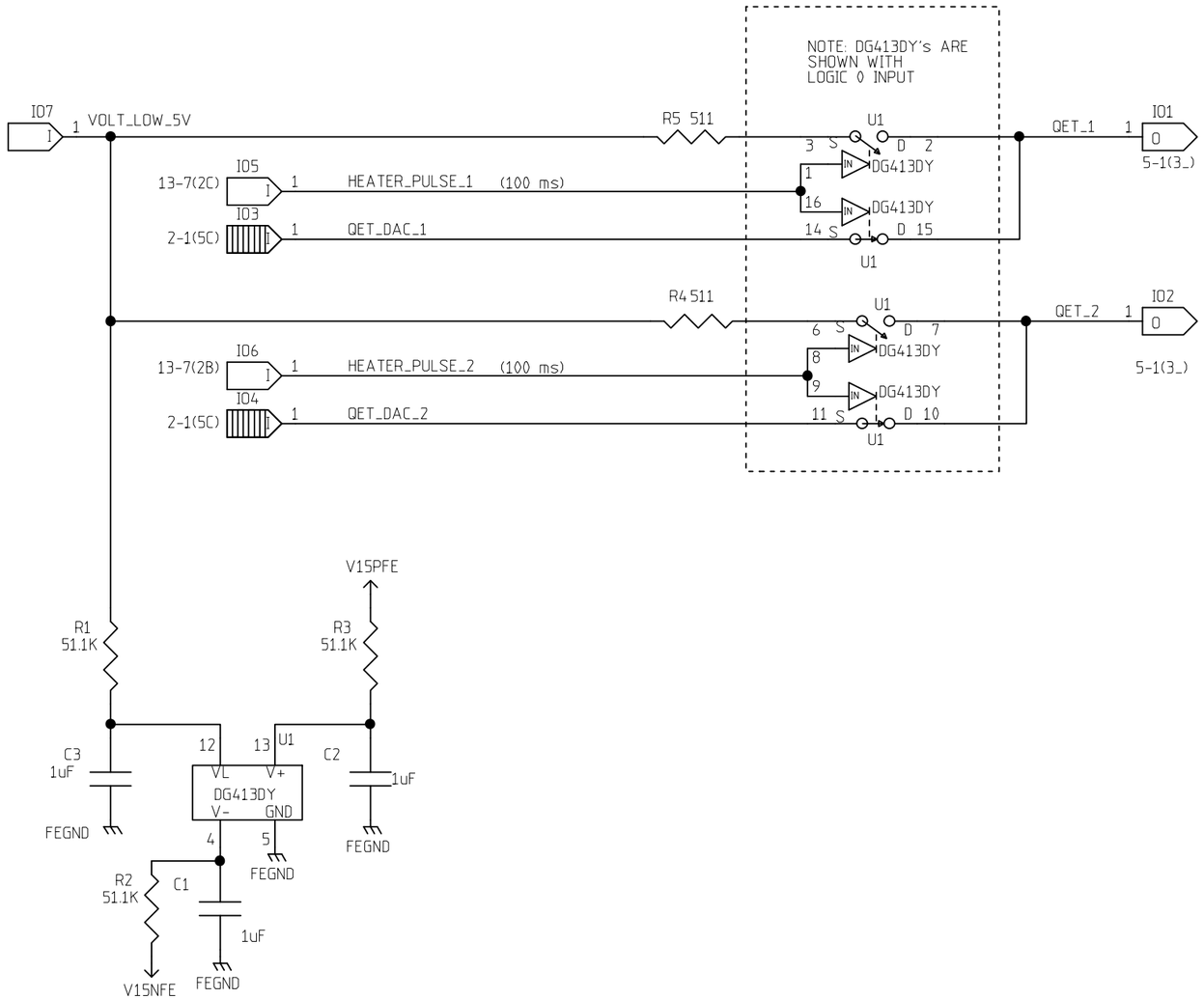


| | NAME | DATE |
|---|---|---|
| ORIGINATOR | MERLE HALDEMAN | 11/16/98 |
| DRAWN | BRUCE MERKEL | 11/16/98 |
| CHECKED | TOM CRENNA | 1/6/99 |
| APPROVED | | |

FERMILAB PPD/ETT/ES CDMS (E-891)
ZIP MODULE
QET_SEL

| SIZE | FSCM NO. | DWG. NO. | REV |
|---|---|---|---|
| B | | | |
| SCALE | | SHEET 5-4 | |

| REVISIONS | | | |
|---|---|---|---|
| REV | DESCRIPTION | DATE | APPROVED |
| | | | |

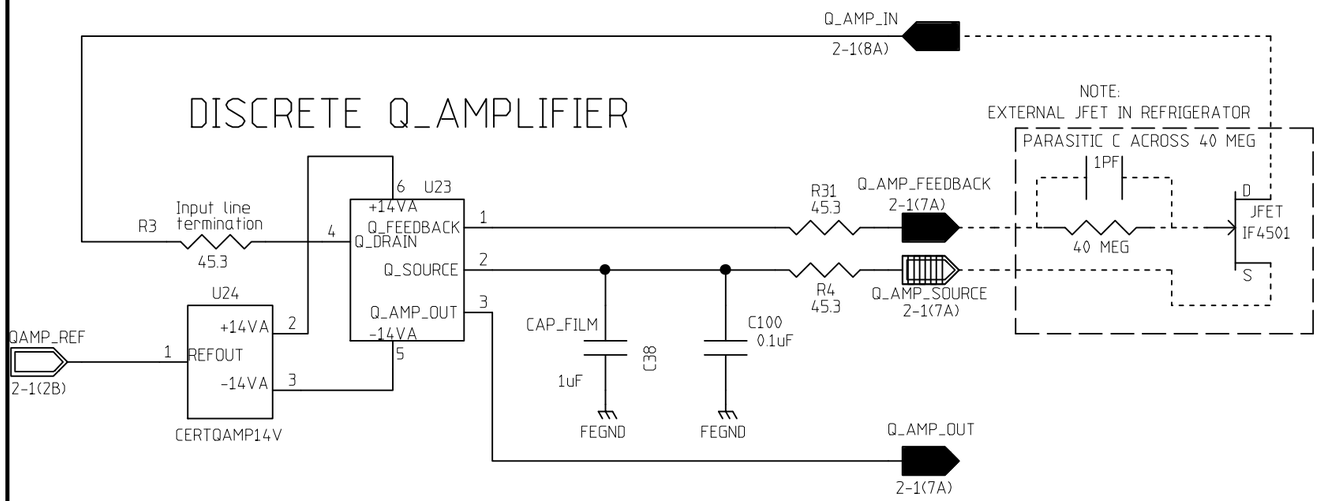


| | NAME | DATE |
|---|---|---|
| ORIGINATOR | MERLE HALDEMAN | 11/16/98 |
| DRAWN | BRUCE MERKEL | 11/16/98 |
| CHECKED | TOM CRENNA | 1/6/99 |
| APPROVED | | |

FERMILAB PPD/ETT/ES CDMS (E-891)
ZIP MODULE
QAMP BLOCK DIAGRAM

| SIZE | FSCM NO. | DWG. NO. | REV |
|---|---|---|---|
| B | | | |
| SCALE | | SHEET 6-1 | |

| REVISIONS | | | |
|---|---|---|---|
| REV | DESCRIPTION | DATE | APPROVED |
| | | | |

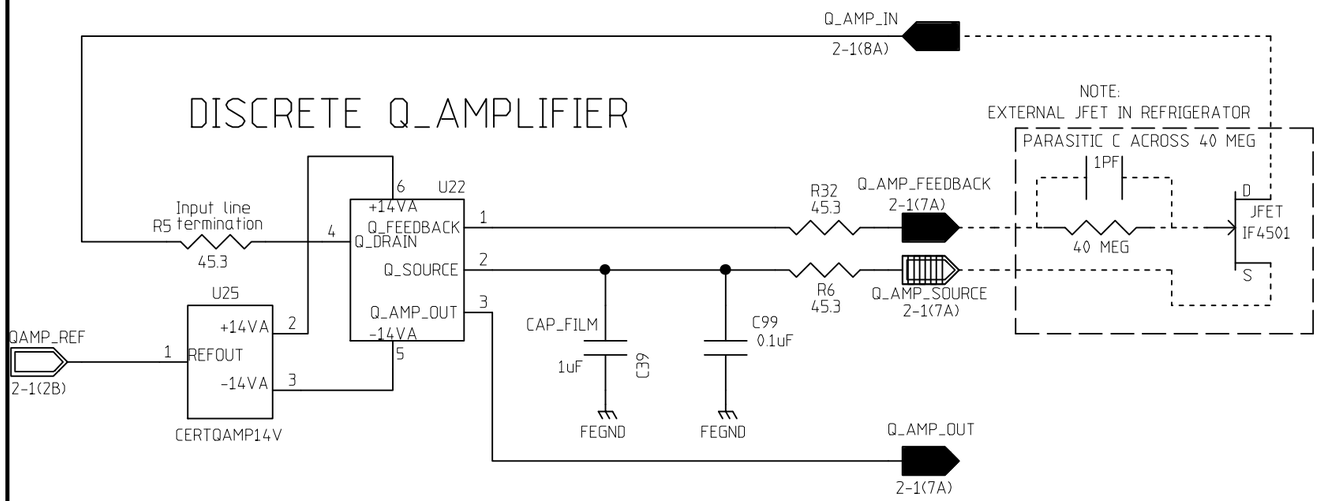


| | NAME | DATE |
|---|---|---|
| ORIGINATOR | MERLE HALDEMAN | 11/16/98 |
| DRAWN | BRUCE MERKEL | 11/16/98 |
| CHECKED | TOM CRENNA | 1/6/99 |
| APPROVED | | |

FERMILAB PPD/ETT/ES CDMS (E-891)
ZIP MODULE
QAMP BLOCK DIAGRAM

| SIZE | FSCM NO. | DWG. NO. | REV |
|---|---|---|---|
| B | | | |
| SCALE | | SHEET 6-1 | |

| REVISIONS | | | |
|---|---|---|---|
| REV | DESCRIPTION | DATE | APPROVED |
| | | | |

# DISCRETE Q_AMPLIFIER

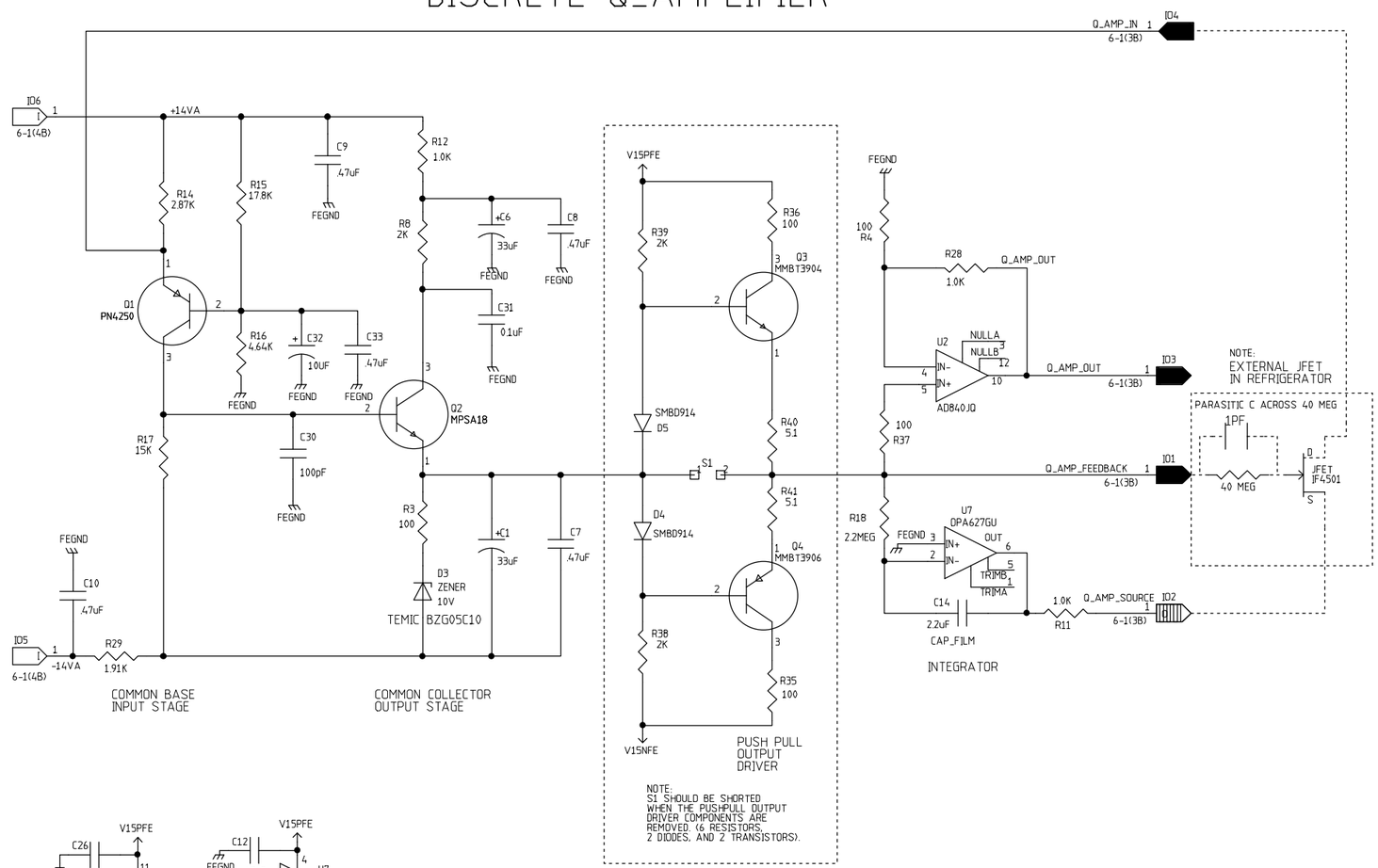


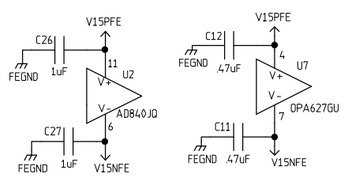


| | NAME | DATE |
|---|---|---|
| ORIGINATOR | MERLE HALDEMAN | 11/16/98 |
| DRAWN | BRUCE MERKEL | 11/16/98 |
| CHECKED | TOM CRENNA | 1/6/99 |
| APPROVED | | |

FERMILAB PPD/EET/ES CDMS (E-891)
ZIP MODULE
DISCRETE Q AMPLIFIER

| SIZE | FSCM NO. | DWG. NO. | REV |
|---|---|---|---|
| C | | | |
| SCALE | | SHEET 6-2 | |

| REVISIONS | | | |
|---|---|---|---|
| REV | DESCRIPTION | DATE | APPROVED |
| | | | |

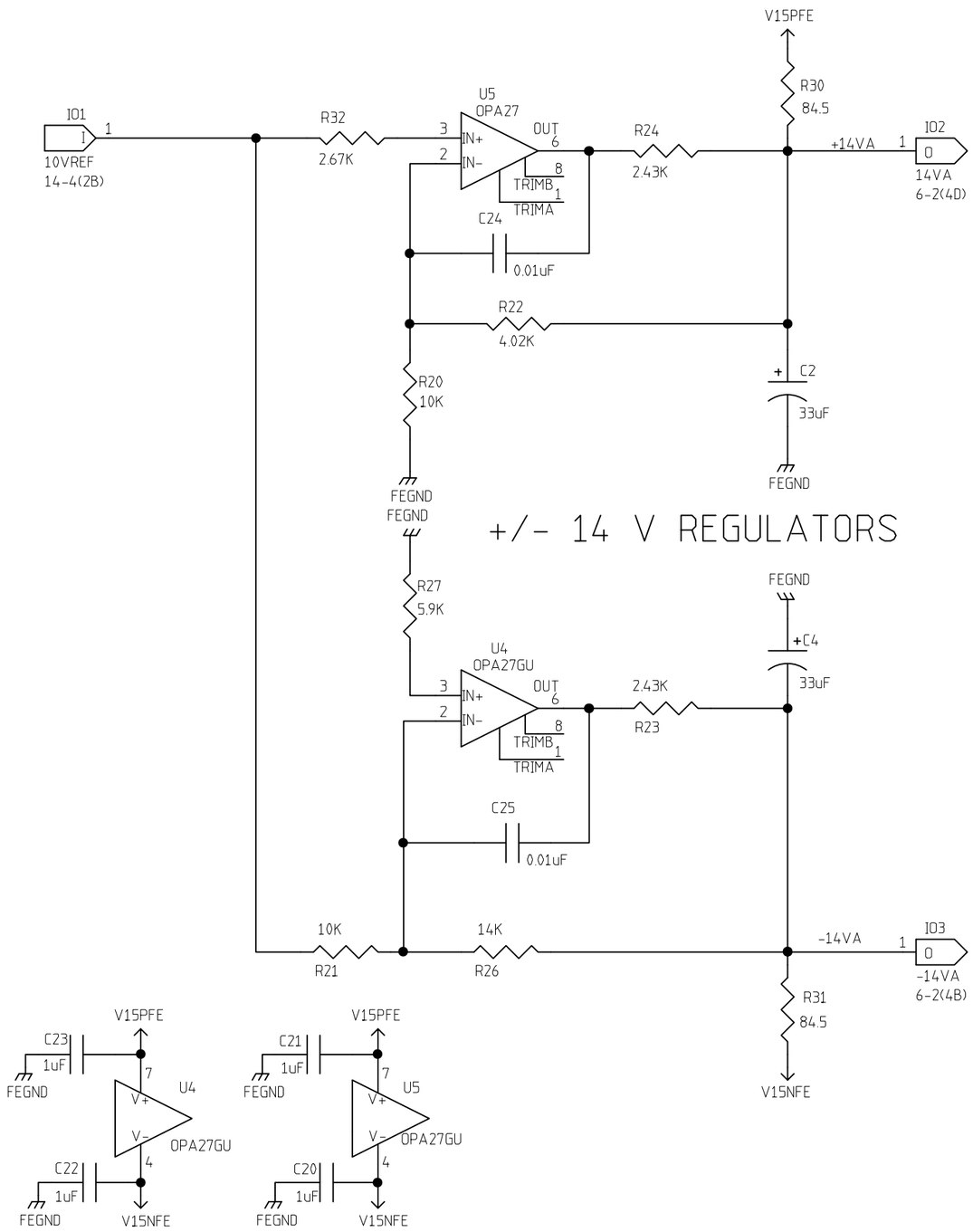


| | NAME | DATE |
|---|---|---|
| ORIGINATOR | MERLE HALDEMAN | 11/16/98 |
| DRAWN | BRUCE MERKEL | 11/16/98 |
| CHECKED | TOM CRENNA | 1/6/99 |
| APPROVED | | |

FERMILAB PPD/ ETT/ ES CDMS (E-891)

ZIP MODULE

Q AMP 14V

| SIZE | FSCM NO. | DWG. NO. | REV |
|---|---|---|---|
| B | | | |

SCALE | SHEET 6-3

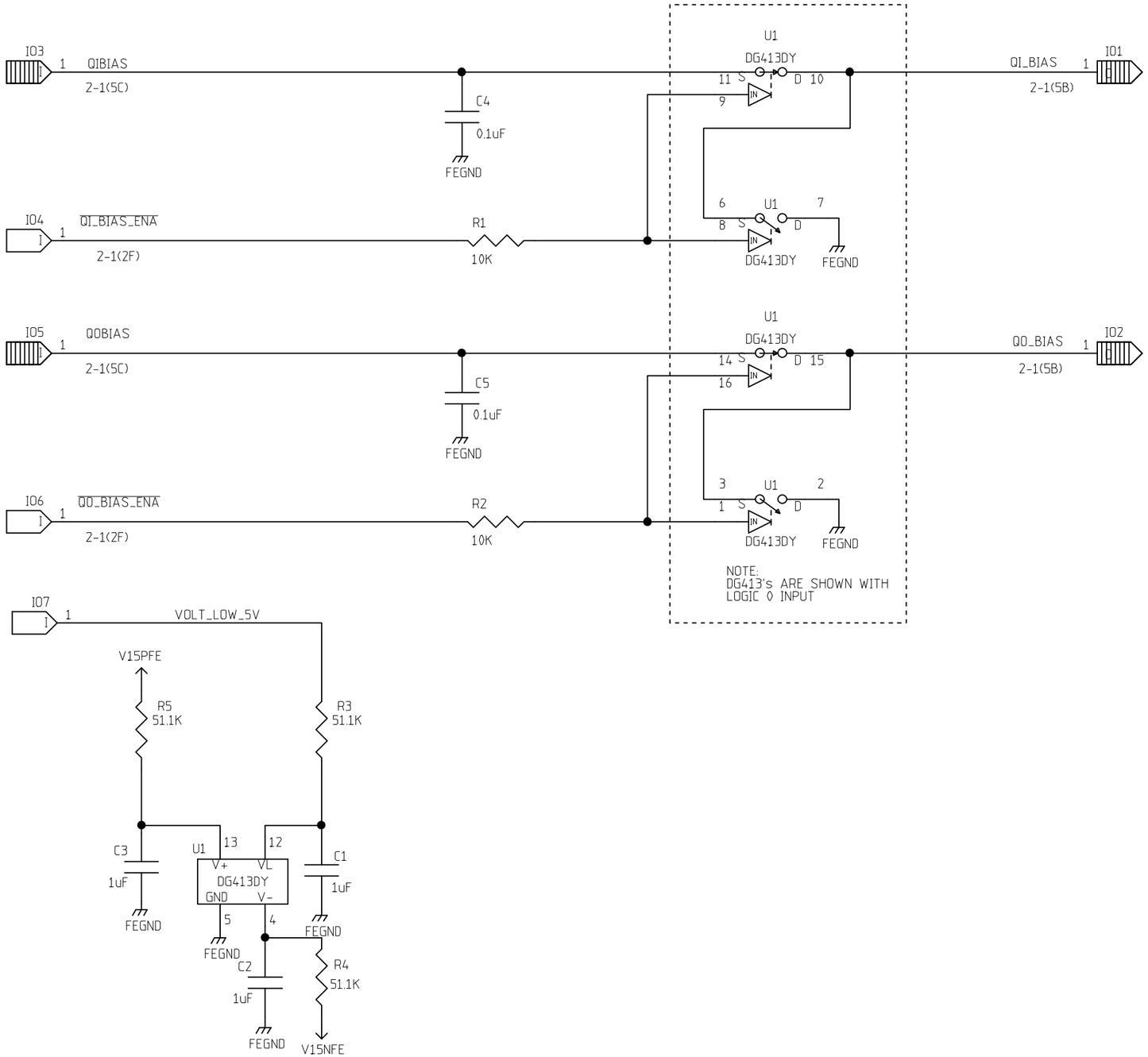


| REVISIONS | | | |
|---|---|---|---|
| REV | DESCRIPTION | DATE | APPROVED |
| | | | |

| | NAME | DATE |
|---|---|---|
| ORIGINATOR | MERLE HALDEMAN | 11/16/98 |
| DRAWN | BRUCE MERKEL | 12/08/98 |
| CHECKED | TOM CRENNA | 1/6/99 |
| APPROVED | | |

FERMILAB PPD/ETT/ES CDMS (E-891)
ZIP MODULE
QBIAS FRONT END

| SIZE | FSCM NO. | DWG. NO. | REV |
|---|---|---|---|
| B | | | |
| SCALE | | SHEET 7-1 | |

| REVISIONS | | | |
|---|---|---|---|
| REV | DESCRIPTION | DATE | APPROVED |
| 0 | MOVED DIGITAL OUT OF ANALOG AREA | 3/24/99 | B MERKEL |

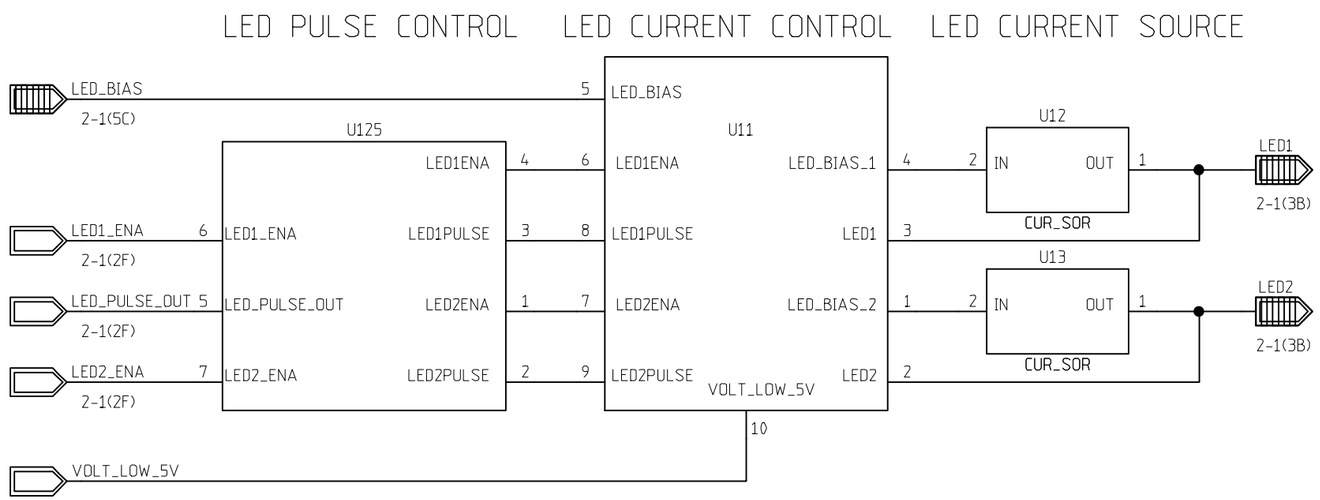


| | NAME | DATE |
|---|---|---|
| ORIGINATOR | MERLE HALDEMAN | 11/16/98 |
| DRAWN | BRUCE MERKEL | 3/24/99 |
| CHECKED | | |
| APPROVED | | |

FERMILAB PPD/ETT/ES CDMS (E-891)
ZIP MODULE
LED BLOCK DIAGRAM

| SIZE | FSCM NO. | DWG. NO. | REV |
|---|---|---|---|
| B | | | |
| SCALE | | SHEET 8-1 | |

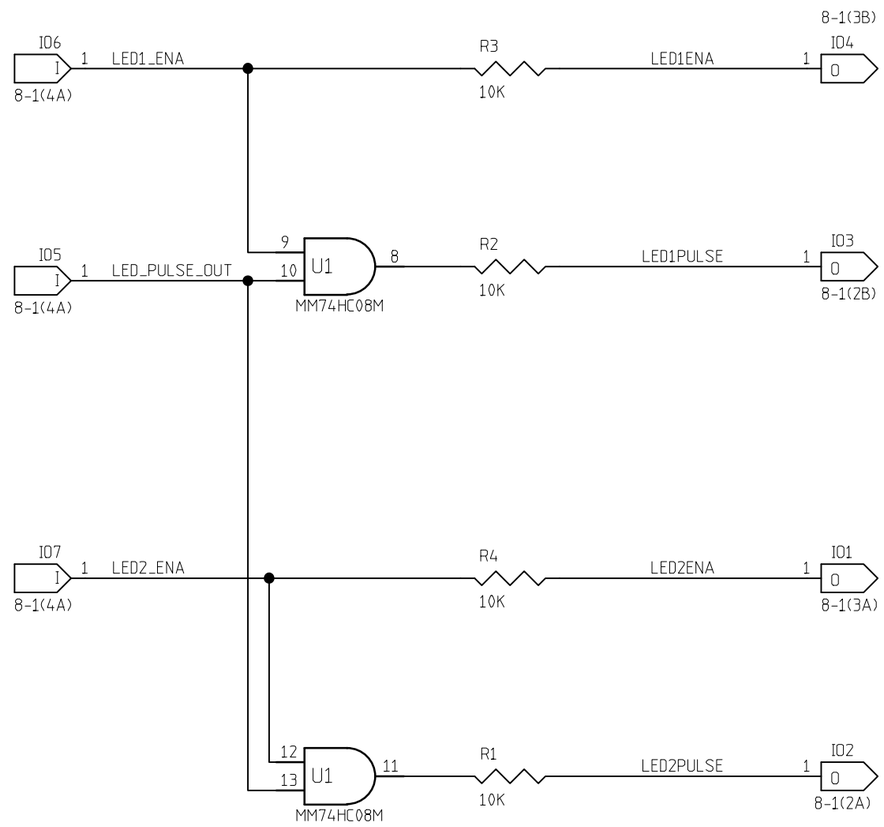


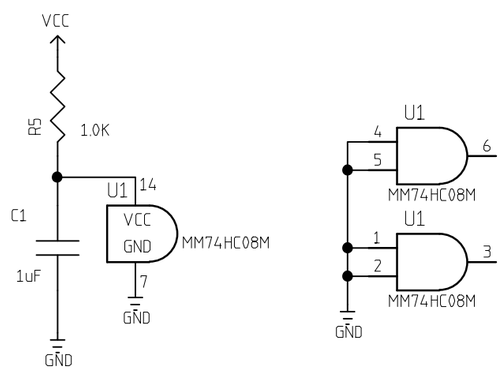


REVISIONS

| REV | DESCRIPTION | DATE | APPROVED |
|---|---|---|---|
| | | | |

| | NAME | DATE |
|---|---|---|
| ORIGINATOR | MERLE HALDEMAN | 3/24/99 |
| DRAWN | BRUCE MERKEL | 3/24/99 |
| CHECKED | | |
| APPROVED | | |

FERMILAB PPD/ ETT/ ES CDMS(E-891)
ZIP MODULE
LED PULSE CONTROL

| SIZE | FSCM NO. | DWG. NO. | REV |
|---|---|---|---|
| B | | | |

SCALE | SHEET 8-3

| REVISIONS | | | |
|---|---|---|---|
| REV | DESCRIPTION | DATE | APPROVED |
| 0 | ADDED A 5V OUTSIDE SOURCE AND REMOVED THE DIGITAL LOGIC TO THE DIGITAL SECTION | 3/24/99 | B MERKEL |

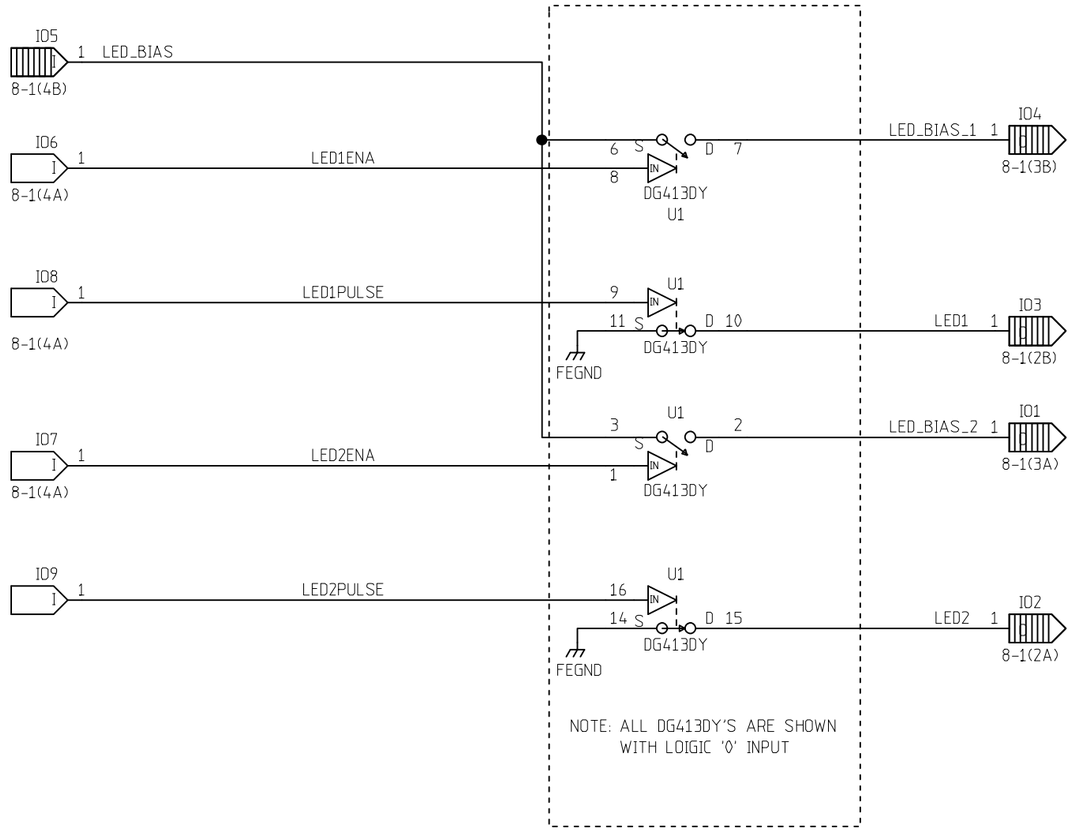


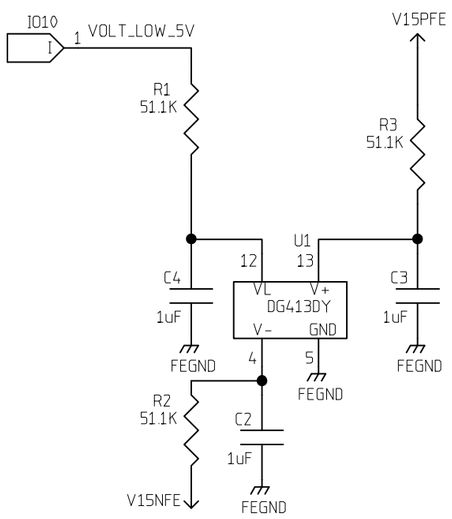


| | NAME | DATE |
|---|---|---|
| ORIGINATOR | MERLE HALDEMAN | 11/16/98 |
| DRAWN | BRUCE MERKEL | 12/17/98 |
| CHECKED | TOM CRENNA | 1/6/99 |
| APPROVED | | |

FERMILAB PPD/ ETT/ ES CDMS(E-891)
ZIP MODULE
LED CURRENT CONTROL

| SIZE | FSCM NO. | DWG. NO. | REV |
|---|---|---|---|
| B | | | |
| SCALE | | SHEET 8-4 | |

| REVISIONS | | | |
|---|---|---|---|
| REV | DESCRIPTION | DATE | APPROVED |
| | | | |

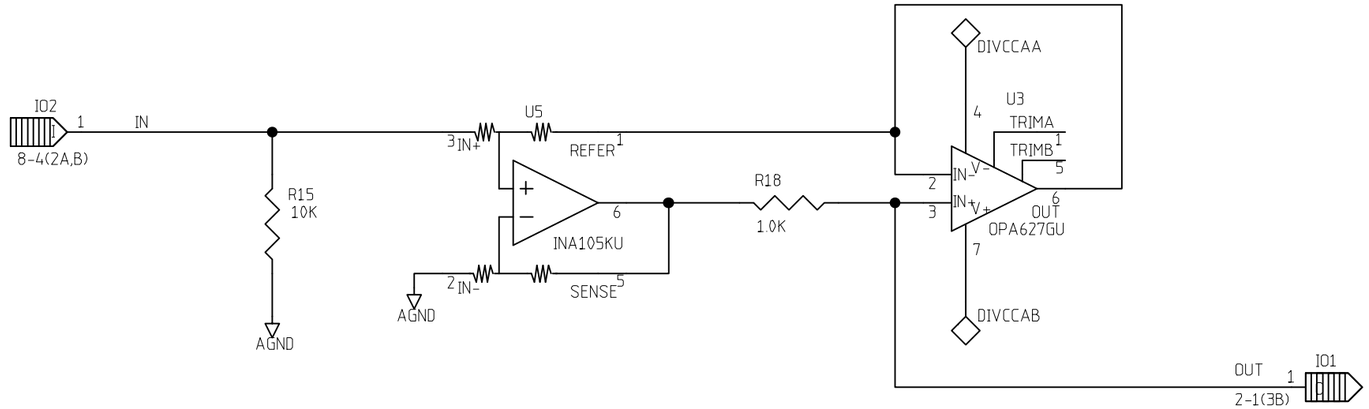


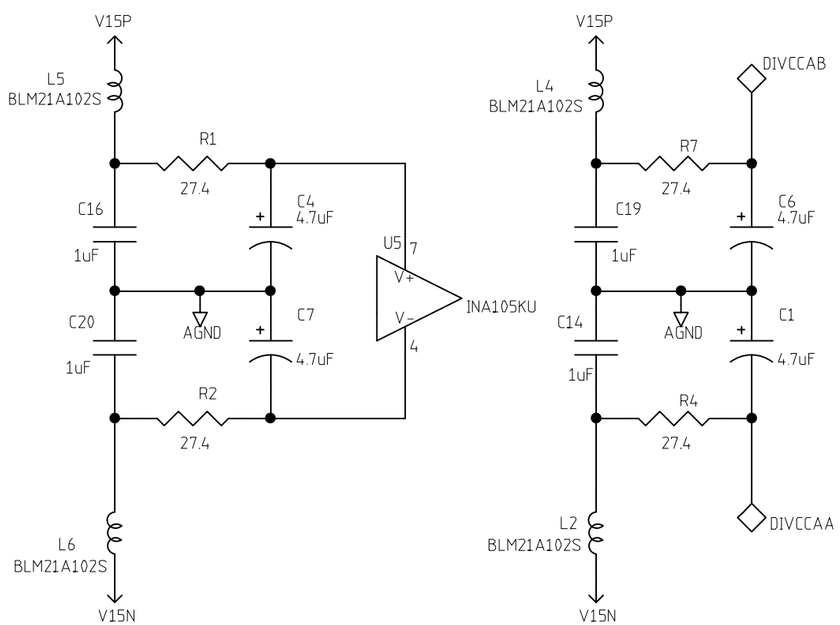


| | NAME | DATE |
|---|---|---|
| ORIGINATOR | MERLE HALDEMAN | 11/16/98 |
| DRAWN | BRUCE MERKEL | 12/09/98 |
| CHECKED | TOM CRENNA | 1/6/99 |
| APPROVED | | |

FERMILAB PPD/ ETT/ ES CDMS(E-891)
ZIP MODULE
LED CURRENT SOURCE

| SIZE | FSCM NO. | DWG. NO. | REV |
|---|---|---|---|
| B | | | |
| SCALE | | SHEET 8-5 | |

# MONENTARY PUSH BUTTON
# FRONT PANEL MOUNT SWITCH

| REVISIONS | | | |
|---|---|---|---|
| REV | DESCRIPTION | DATE | APPROVED |
| | | | |

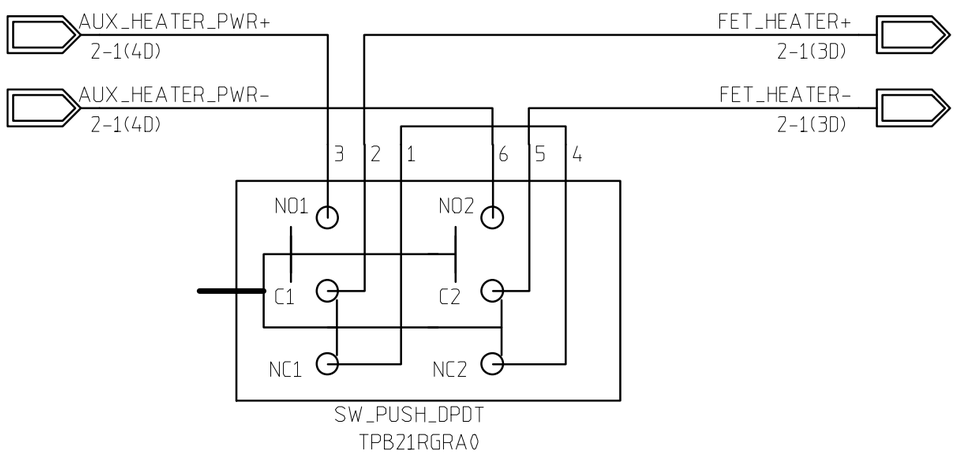


# FETTEMP

| | NAME | DATE |
|---|---|---|
| ORIGINATOR | MERLE HALDEMAN | 11/16/98 |
| DRAWN | BRUCE MERKEL | 11/16/98 |
| CHECKED | TOM CRENNA | 1/6/99 |
| APPROVED | | |

FERMILAB PPD/EET/ES CDMS (E-891)
ZIP MODULE
FETTEMP

| SIZE | FSCM NO. | DWG. NO. | REV |
|---|---|---|---|
| A | | | |

| SCALE | | SHEET 9-1 |
|---|---|---|

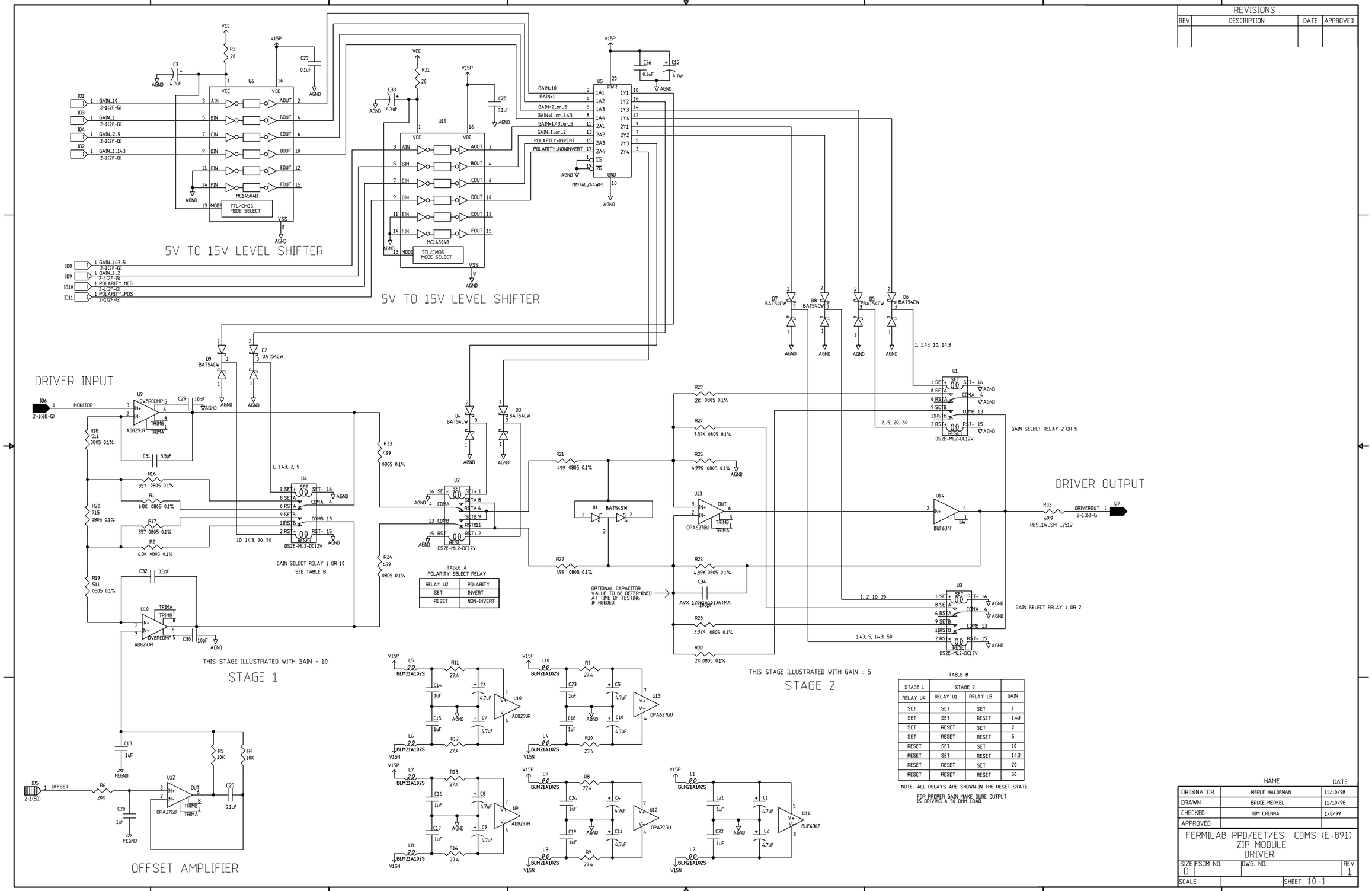
5V TO 15V LEVEL SHIFTER
5V TO 15V LEVEL SHIFTER
DRIVER INPUT
DRIVER OUTPUT
GAIN SELECT RELAY 2 OR 5
GAIN SELECT RELAY 1 OR 2
GAIN SELECT RELAY 1 OR 10
SEE TABLE B
THIS STAGE ILLUSTRATED WITH GAIN = 10
STAGE 1
THIS STAGE ILLUSTRATED WITH GAIN = 5
STAGE 2
OFFSET AMPLIFIER
OPTIONAL CAPACITOR VALUE TO BE DETERMINED AT TIME OF TESTING IF NEEDED.
TABLE A
POLARITY SELECT RELAY
RELAY U2 | POLARITY
SET | INVERT
RESET | NON-INVERT
TABLE B
STAGE 1 | STAGE 2 | |
RELAY U4 | RELAY U1 | RELAY U3 | GAIN
SET | SET | SET | 1
SET | SET | RESET | 1.43
SET | RESET | SET | 2
SET | RESET | RESET | 5
RESET | SET | SET | 10
RESET | SET | RESET | 14.3
RESET | RESET | SET | 20
RESET | RESET | RESET | 50
NOTE: ALL RELAYS ARE SHOWN IN THE RESET STATE
FOR PROPER GAIN MAKE SURE OUTPUT IS DRIVING A 50 OHM LOAD
REVISIONS
REV | DESCRIPTION | DATE | APPROVED
NAME | DATE
ORIGINATOR | MERLE HALDEMAN | 11/10/98
DRAWN | BRUCE MERKEL | 11/10/98
CHECKED | TOM CRENNA | 1/8/99
APPROVED
FERMILAB PPD/EET/ES CDMS (E-891)
ZIP MODULE
DRIVER
SIZE D | FSCM NO. | DWG. NO. | REV 1
SCALE | SHEET 10-1

| REVISIONS | | | |
|---|---|---|---|
| REV | DESCRIPTION | DATE | APPROVED |
| A | CHANGED U1 FROM ANALOG DEVUCES SSM2141S TO LINEAR TECHNOLOGY LT1357CS8 FOR FASTER RESPONSE ALSO ADDED TWO 4.7uF CAPS TO BYPASS | 4/28/99 | M.HALDEMAN |
| | | | |

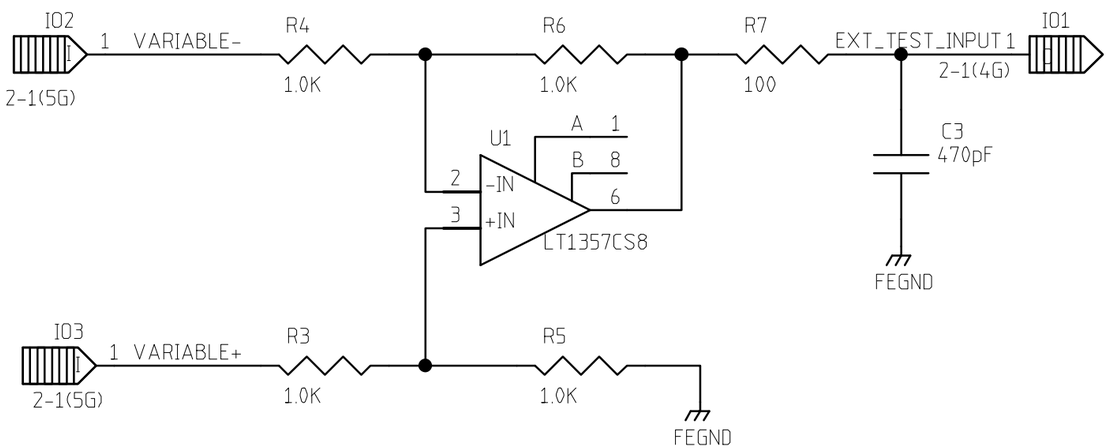


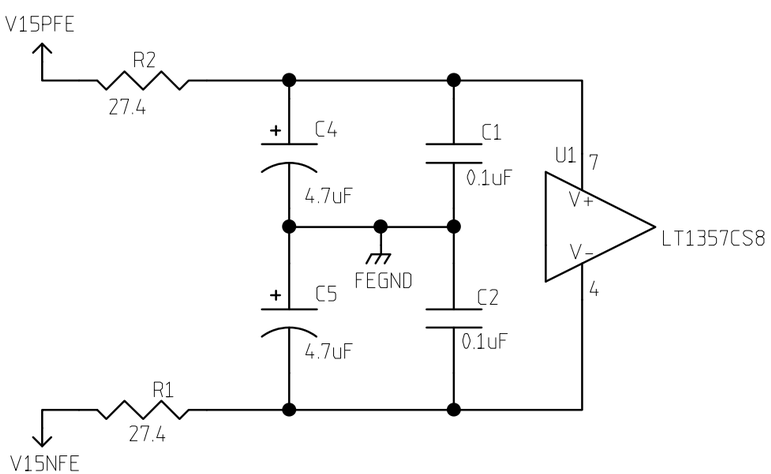


NOTE: FOR HIGHER SPEED USE A LT1363CS8

| | NAME | DATE |
|---|---|---|
| ORIGINATOR | MERLE HALDEMAN | 11/16/98 |
| DRAWN | BRUCE MERKEL | 11/16/98 |
| CHECKED | TOM CRENNA | 1/8/99 |
| APPROVED | | |

FERMILAB PPD/ETT/ES CDMS (E-891)
ZIP MODULE
EXTERNAL TEST RECEIVER

| SIZE | FSCM NO. | DWG. NO. | REV |
|---|---|---|---|
| A | | | A |

SCALE | SHEET 11-1

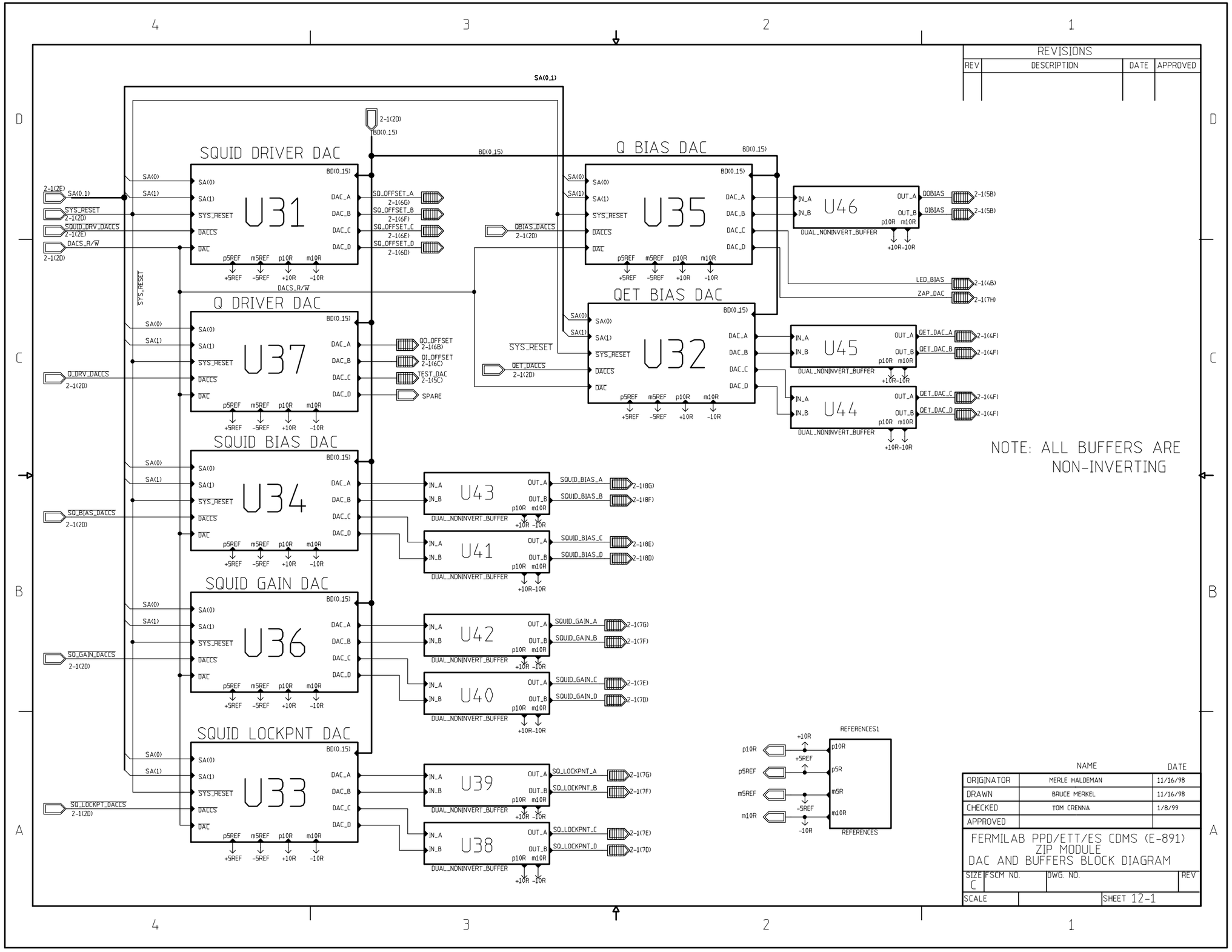


REVISIONS

| REV | DESCRIPTION | DATE | APPROVED |
|---|---|---|---|
| | | | |

| | NAME | DATE |
|---|---|---|
| ORIGINATOR | MERLE HALDEMAN | 11/16/98 |
| DRAWN | BRUCE MERKEL | 11/16/98 |
| CHECKED | TOM CRENNA | 1/8/99 |
| APPROVED | | |

FERMILAB PPD/ETT/ES CDMS (E-891)
ZIP MODULE
DAC AND BUFFERS BLOCK DIAGRAM

| SIZE | FSCM NO. | DWG. NO. | REV |
|---|---|---|---|
| C | | | |
| SCALE | | SHEET 12-1 | |

| REVISIONS | | | |
|---|---|---|---|
| REV | DESCRIPTION | DATE | APPROVED |
| 0 | UNDER DEVELOPMENT | 1-19-99 | |

# DAC 10 VOLT REGULATOR

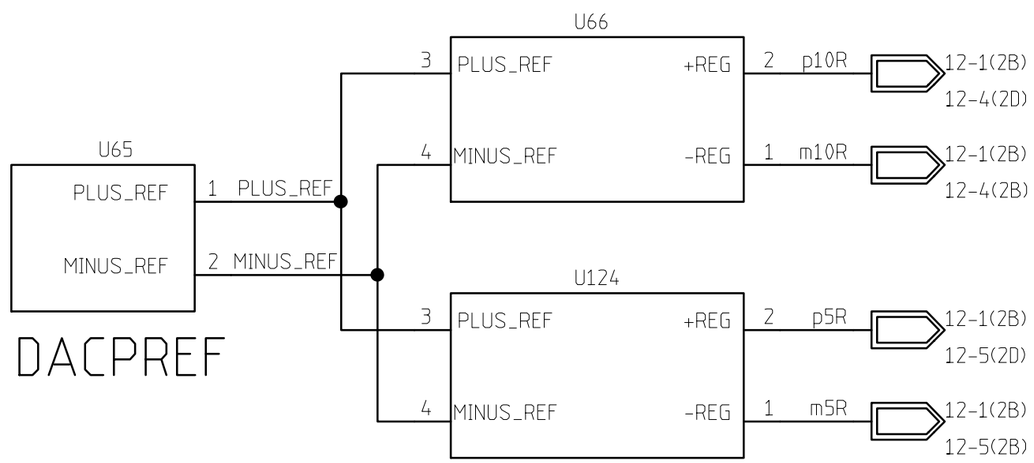


# DAC 5 VOLT REGULATOR

| | NAME | DATE |
|---|---|---|
| ORIGINATOR | MERLE HALDEMAN | 11/16/98 |
| DRAWN | BRUCE MERKEL | 11/16/98 |
| CHECKED | TOM CRENNA | 1/8/99 |
| APPROVED | | |

FERMILAB PPD/ ETT/ ES CDMS(E-891)
ZIP MODULE
DAC REFERENCES

| SIZE | FSCM NO. | DWG. NO. | REV |
|---|---|---|---|
| A | | | |

SCALE | SHEET 12-2

| REVISIONS | | | |
|---|---|---|---|
| REV | DESCRIPTION | DATE | APPROVED |
| | | | |

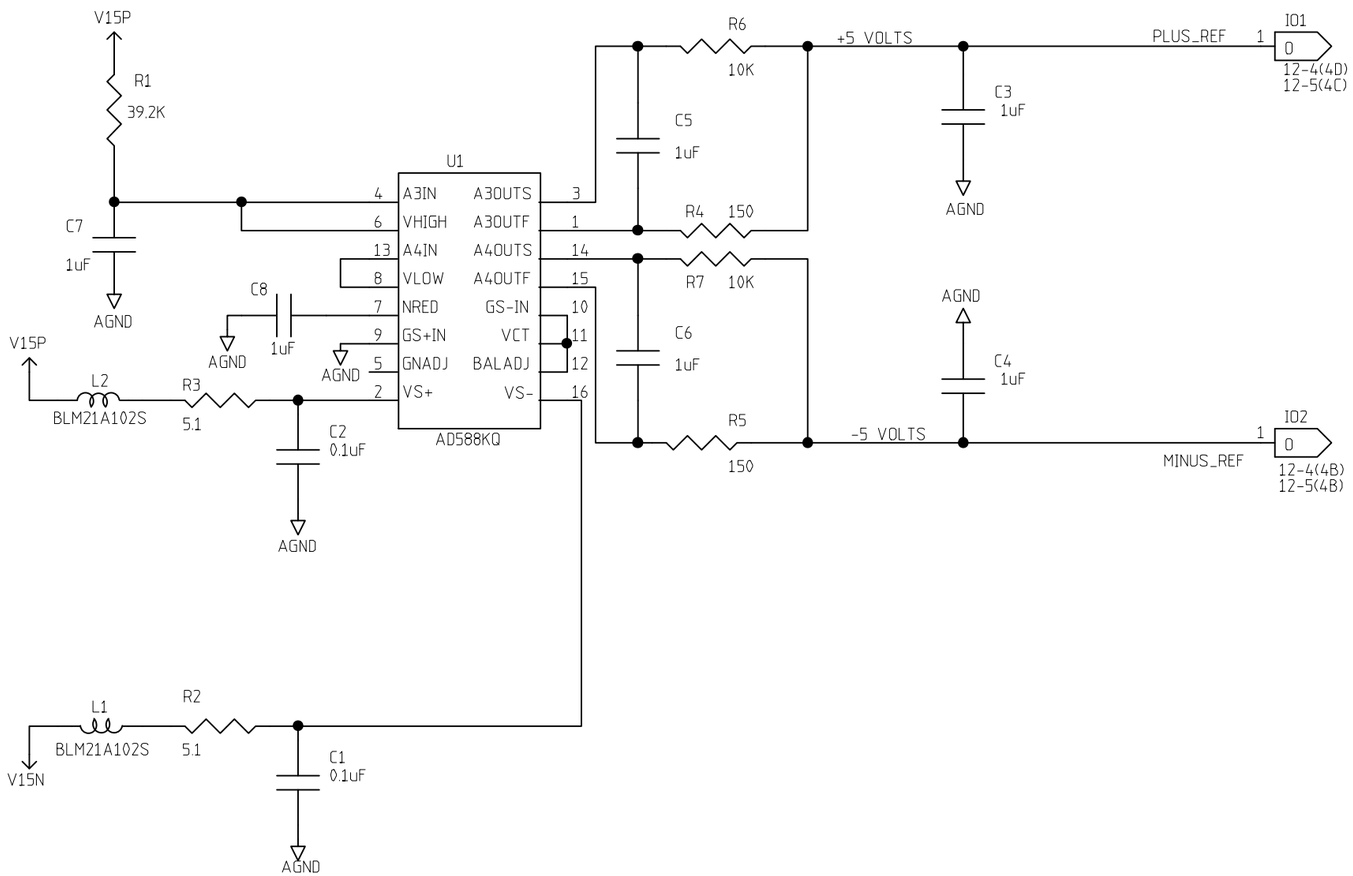


| | NAME | DATE |
|---|---|---|
| ORIGINATOR | MERLE HALDEMAN | 12/01/98 |
| DRAWN | BRUCE MERKEL | 12/01/98 |
| CHECKED | TOM CRENNA | 1/8/99 |
| APPROVED | | |

FERMILAB PPD/ ETT/ ES CDMS(E-891)
ZIP MODULE
DAC PRECISION REFERENCE

| SIZE | FSCM NO. | DWG. NO. | REV |
|---|---|---|---|
| B | | | |

SCALE | SHEET 12-3

| REVISIONS | | | |
|---|---|---|---|
| REV | DESCRIPTION | DATE | APPROVED |
| 0 | USE FOR BOTH 10 & 5 VOLT REFERENCE | 3/23/99 | B. MERKEL |

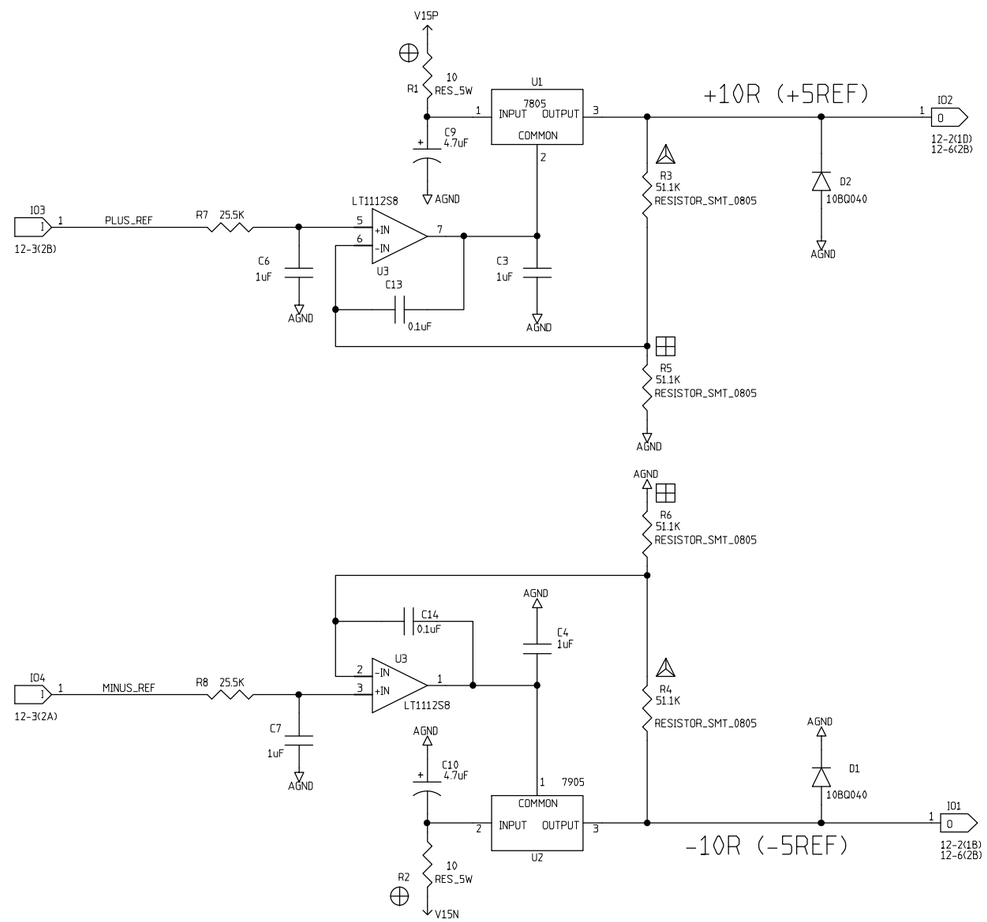


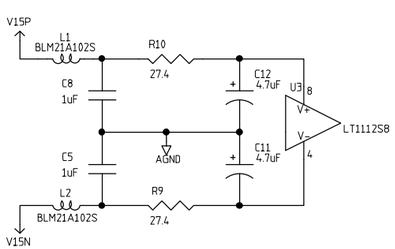


ALL VALUES SHOWN FOR

10 VOLT REFERENCE

USE VALUES BELOW FOR

5 VOLT REFERENCE

⊕ 240 OHM 5W RESISTOR
△ 25.5K OHM RESISTOR
⊞ RESISTOR NOT INSTALLED

| | NAME | DATE |
|---|---|---|
| ORIGINATOR | MERLE HALDEMAN | 12/01/98 |
| DRAWN | BRUCE MERKEL | 12/01/98 |
| CHECKED | TOM CRENNA | 1/8/99 |
| APPROVED | | |

FERMILAB PPD/ ETT/ ES CDMS(E-891)
ZIP MODULE
DAC +/- VOLTAGE REFERENCES

| SIZE | FSCM NO. | DWG. NO. | REV |
|---|---|---|---|
| C | | | |
| SCALE | | SHEET 12-4 | |

| REVISIONS | | | |
|---|---|---|---|
| REV | DESCRIPTION | DATE | APPROVED |
| 0 | UNDER DEVELOPMENT | 1-19-99 | |

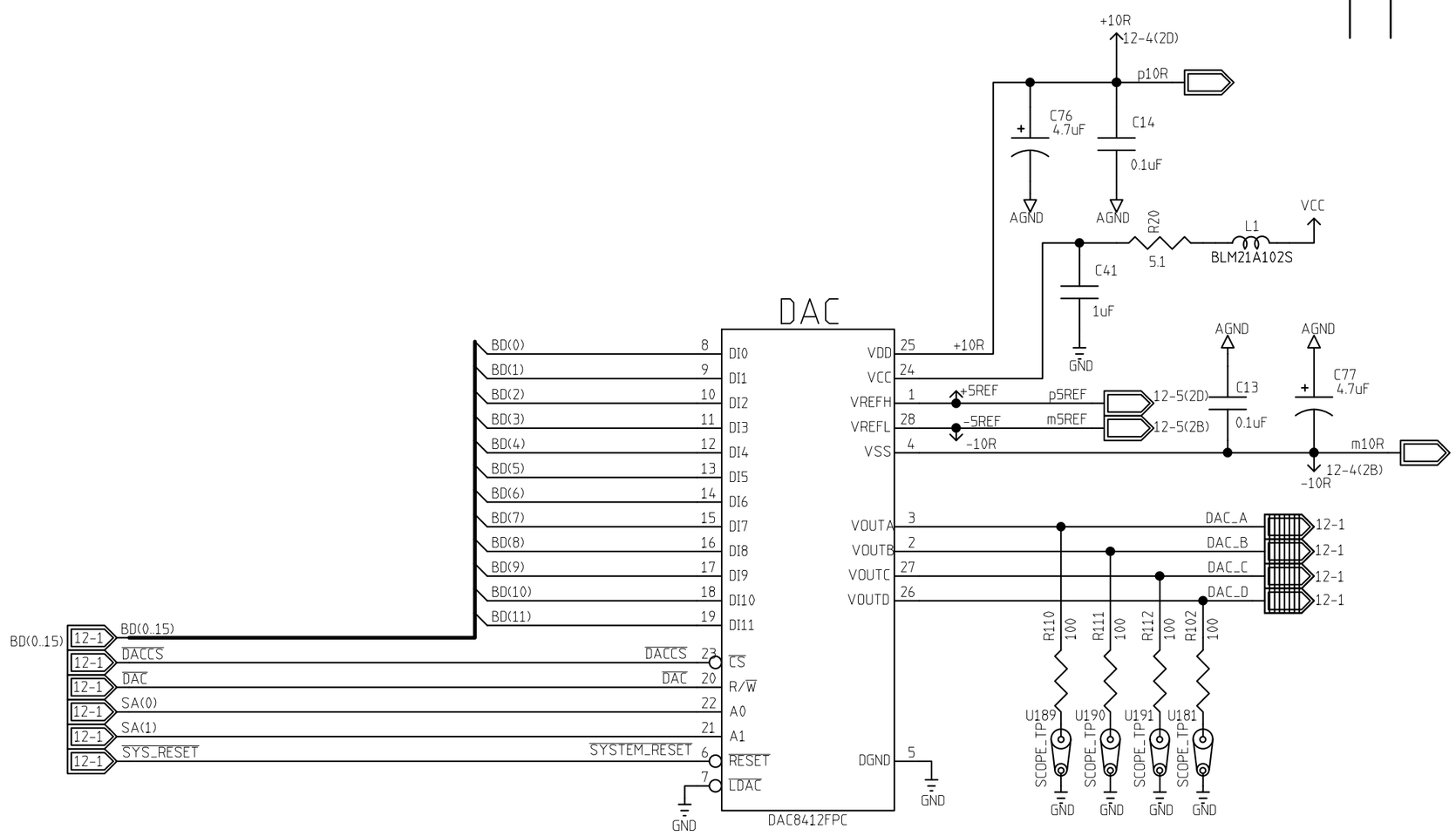


| | NAME | DATE |
|---|---|---|
| ORIGINATOR | MERLE HALDEMAN | 11/17/98 |
| DRAWN | BRUCE MERKEL | 11/17/98 |
| CHECKED | TOM CRENNA | 1/8/99 |
| APPROVED | | |

FERMILAB PPD/ ETT/ ES CDMS(E-891)
ZIP MODULE
U31 DAC'S_1_TO_7

| SIZE | FSCM NO. | DWG. NO. | REV |
|---|---|---|---|
| B | | | |
| SCALE | | SHEET 12-6 | |

| REVISIONS | | | |
|---|---|---|---|
| REV | DESCRIPTION | DATE | APPROVED |
| 0 | UNDER DEVELOPMENT | 1-19-99 | |

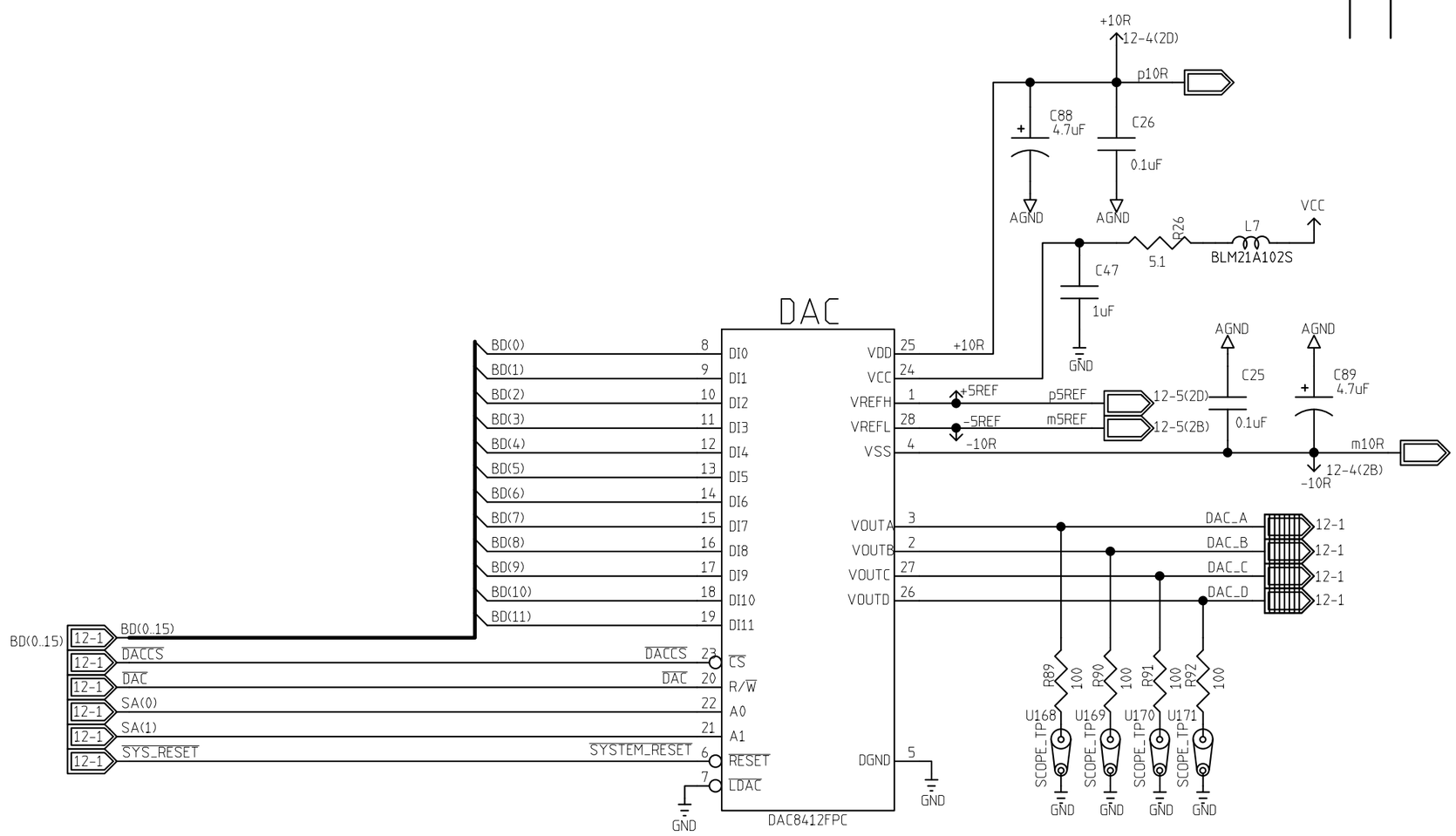


| | NAME | DATE |
|---|---|---|
| ORIGINATOR | MERLE HALDEMAN | 11/17/98 |
| DRAWN | BRUCE MERKEL | 11/17/98 |
| CHECKED | TOM CRENNA | 1/8/99 |
| APPROVED | | |

FERMILAB PPD/ ETT/ ES CDMS(E-891)
ZIP MODULE
U32 DAC'S_1_TO_7

| SIZE | FSCM NO. | DWG. NO. | REV |
|---|---|---|---|
| B | | | |

SCALE | SHEET 12-6

| REVISIONS | | | |
|---|---|---|---|
| REV | DESCRIPTION | DATE | APPROVED |
| 0 | UNDER DEVELOPMENT | 1-19-99 | |

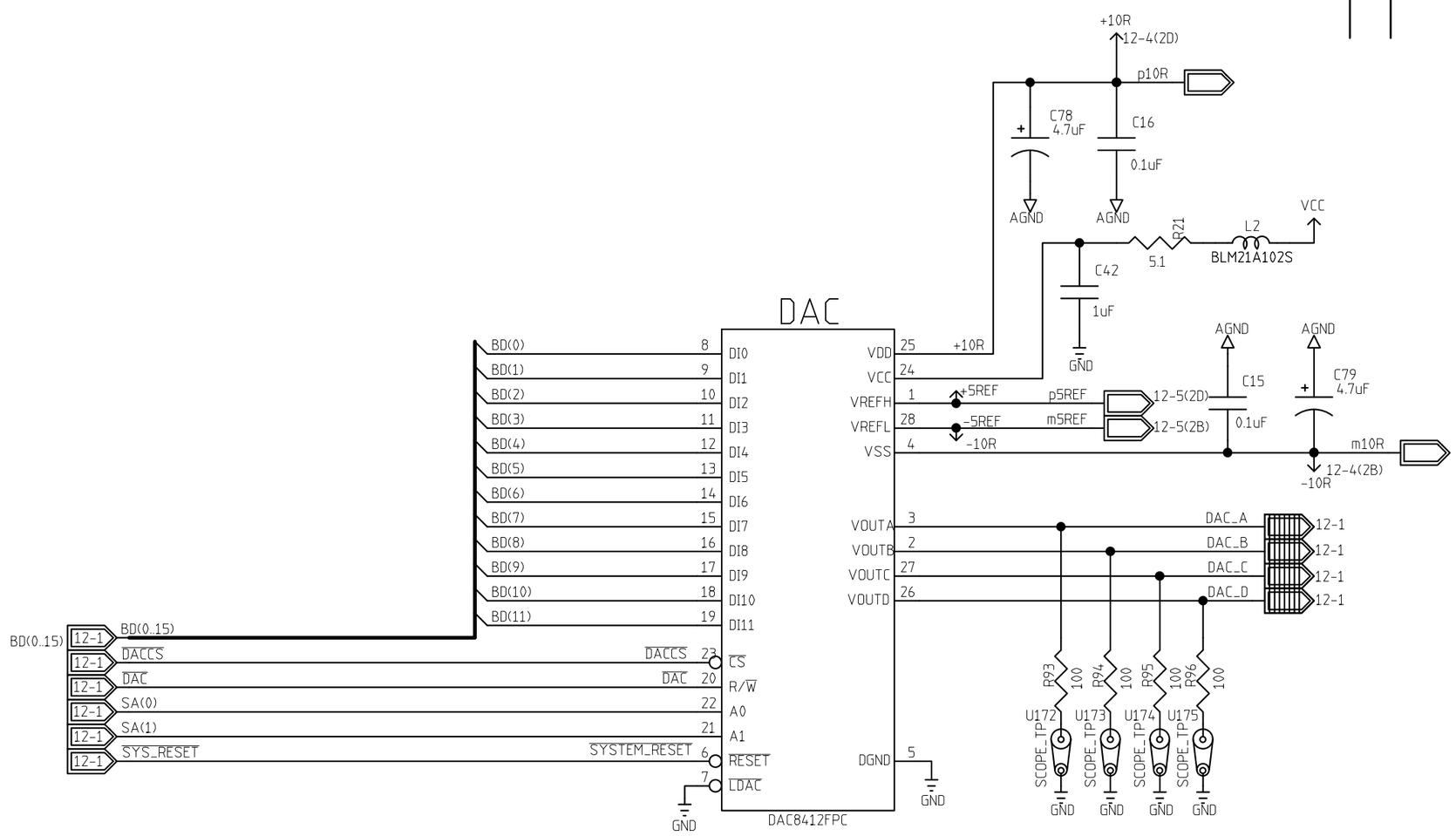


| | NAME | DATE |
|---|---|---|
| ORIGINATOR | MERLE HALDEMAN | 11/17/98 |
| DRAWN | BRUCE MERKEL | 11/17/98 |
| CHECKED | TOM CRENNA | 1/8/99 |
| APPROVED | | |

FERMILAB PPD/ ETT/ ES CDMS(E-891)
ZIP MODULE
U33 DAC'S_1_TO_7

| SIZE | FSCM NO. | DWG. NO. | REV |
|---|---|---|---|
| B | | | |
| SCALE | | SHEET 12-6 | |

| REVISIONS | | | |
|---|---|---|---|
| REV | DESCRIPTION | DATE | APPROVED |
| 0 | UNDER DEVELOPMENT | 1-19-99 | |

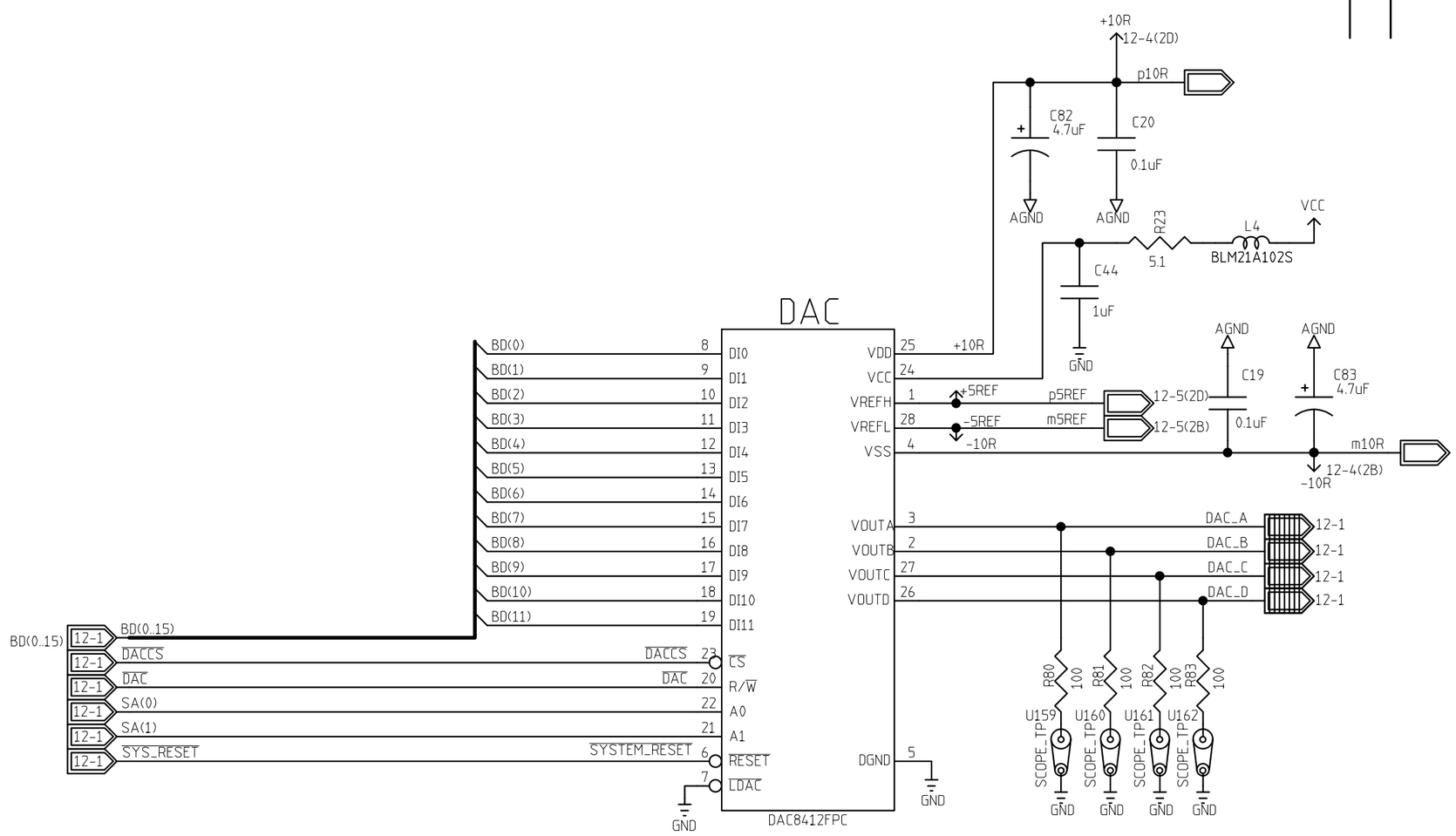


| | NAME | DATE |
|---|---|---|
| ORIGINATOR | MERLE HALDEMAN | 11/17/98 |
| DRAWN | BRUCE MERKEL | 11/17/98 |
| CHECKED | TOM CRENNA | 1/8/99 |
| APPROVED | | |

FERMILAB PPD/ ETT/ ES CDMS(E-891)
ZIP MODULE
U34 DAC'S_1_TO_7

| SIZE | FSCM NO. | DWG. NO. | REV |
|---|---|---|---|
| B | | | |
| SCALE | | SHEET 12-6 | |

| REVISIONS | | | |
|---|---|---|---|
| REV | DESCRIPTION | DATE | APPROVED |
| 0 | UNDER DEVELOPMENT | 1-19-99 | |

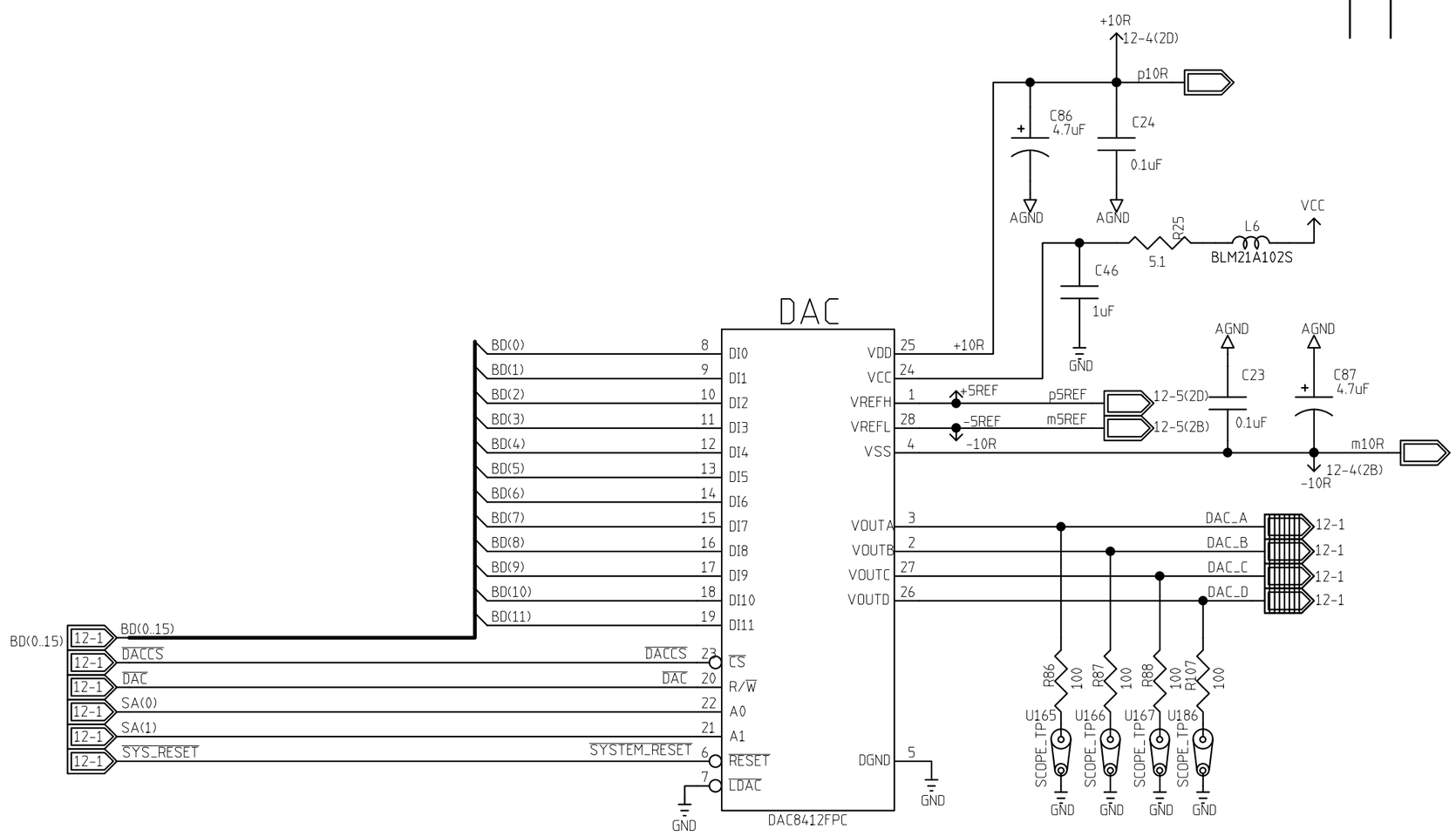


| | NAME | DATE |
|---|---|---|
| ORIGINATOR | MERLE HALDEMAN | 11/17/98 |
| DRAWN | BRUCE MERKEL | 11/17/98 |
| CHECKED | TOM CRENNA | 1/8/99 |
| APPROVED | | |

FERMILAB PPD/ ETT/ ES CDMS(E-891)
ZIP MODULE
U35 DAC'S_1_TO_7

| SIZE | FSCM NO. | DWG. NO. | REV |
|---|---|---|---|
| B | | | |
| SCALE | | SHEET 12-6 | |

| REVISIONS | | | |
|---|---|---|---|
| REV | DESCRIPTION | DATE | APPROVED |
| 0 | UNDER DEVELOPMENT | 1-19-99 | |

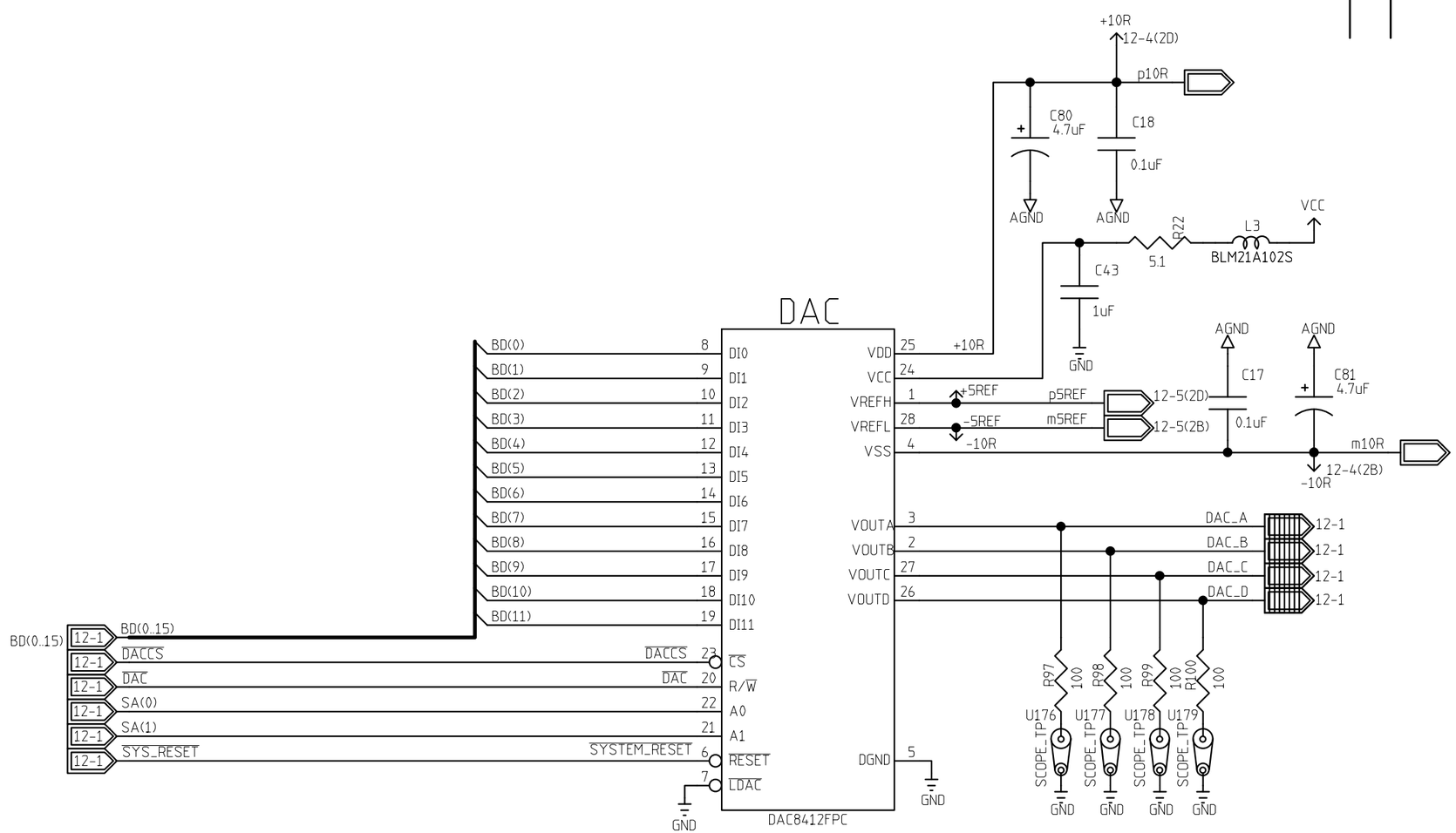


| | NAME | DATE |
|---|---|---|
| ORIGINATOR | MERLE HALDEMAN | 11/17/98 |
| DRAWN | BRUCE MERKEL | 11/17/98 |
| CHECKED | TOM CRENNA | 1/8/99 |
| APPROVED | | |

FERMILAB PPD/ ETT/ ES CDMS(E-891)
ZIP MODULE
U36 DAC'S_1_TO_7

| SIZE | FSCM NO. | DWG. NO. | REV |
|---|---|---|---|
| B | | | |
| SCALE | | SHEET 12-6 | |

| REVISIONS | | | |
|---|---|---|---|
| REV | DESCRIPTION | DATE | APPROVED |
| 0 | UNDER DEVELOPMENT | 1-19-99 | |

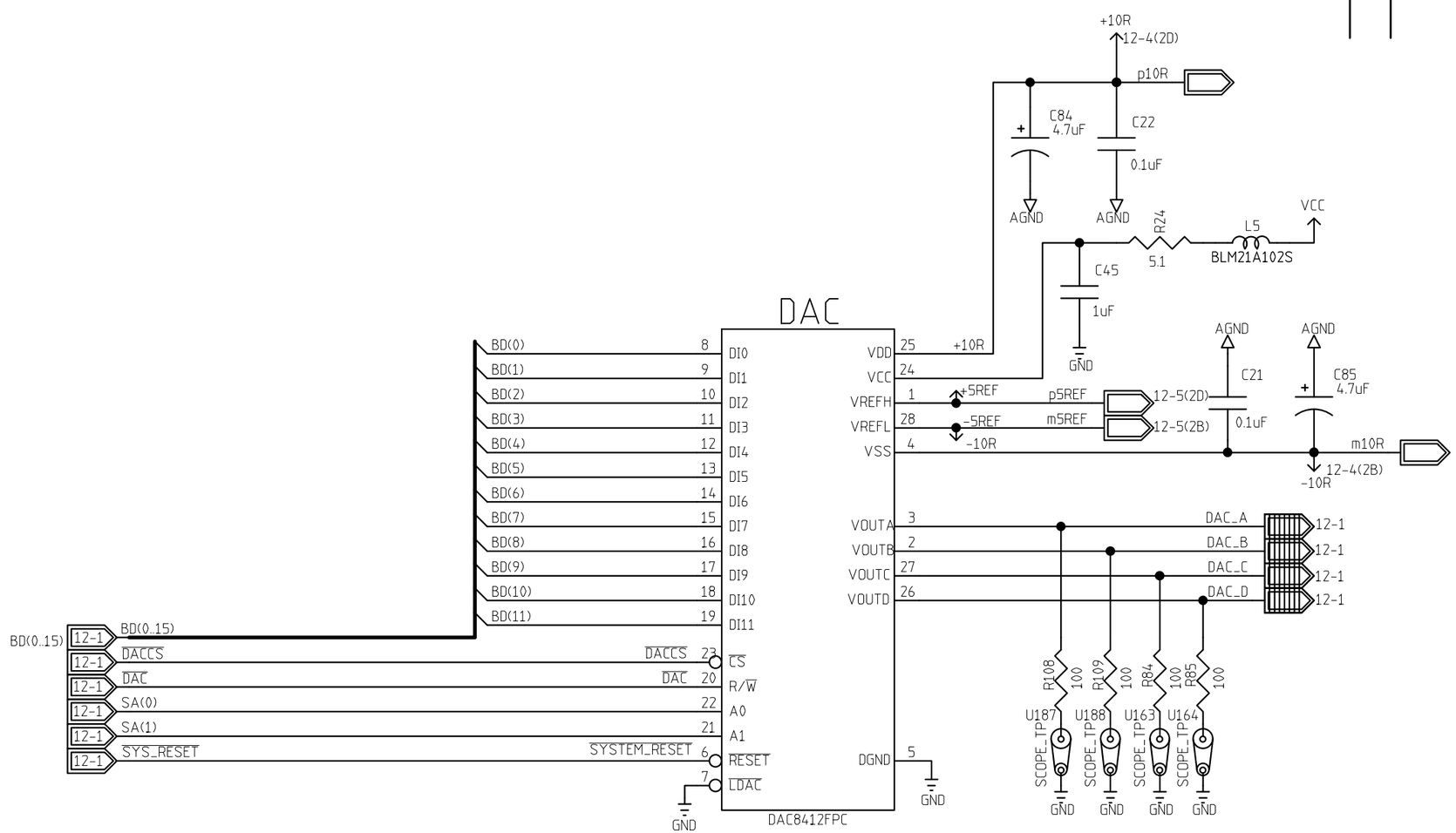


| | NAME | DATE |
|---|---|---|
| ORIGINATOR | MERLE HALDEMAN | 11/17/98 |
| DRAWN | BRUCE MERKEL | 11/17/98 |
| CHECKED | TOM CRENNA | 1/8/99 |
| APPROVED | | |

FERMILAB PPD/ ETT/ ES CDMS(E-891)
ZIP MODULE
U37 DAC'S_1_TO_7

| SIZE | FSCM NO. | DWG. NO. | REV |
|---|---|---|---|
| B | | | |
| SCALE | | SHEET 12-6 | |

| REVISIONS | | | |
|---|---|---|---|
| REV | DESCRIPTION | DATE | APPROVED |
| | | | |

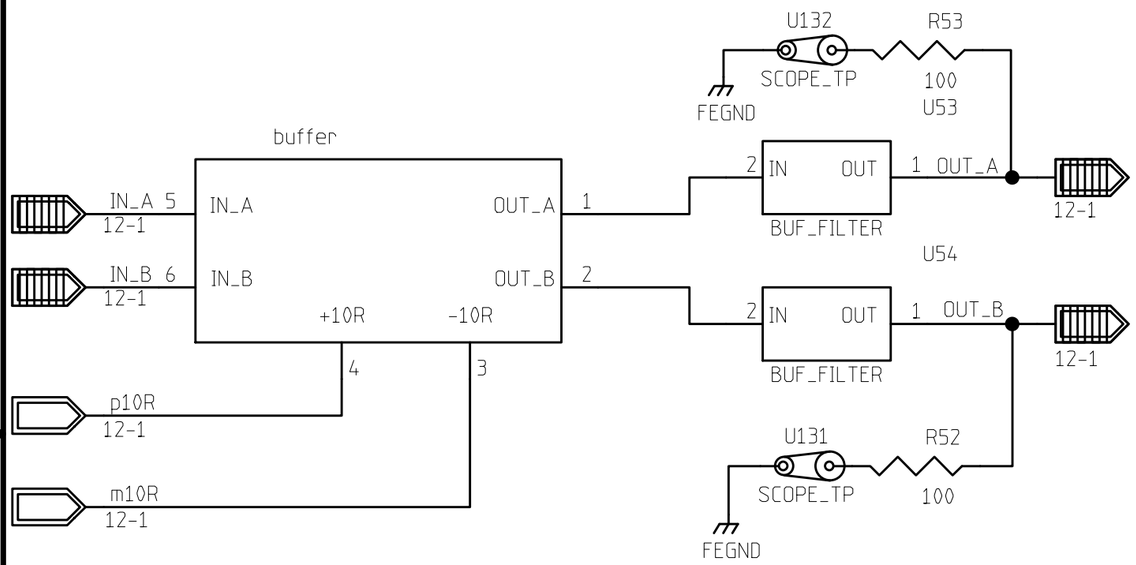


| | NAME | DATE |
|---|---|---|
| ORIGINATOR | MERLE HALDEMAN | 11/17/98 |
| DRAWN | BRUCE MERKEL | 12/10/98 |
| CHECKED | TOM CRENNA | 1/8/99 |
| APPROVED | | |

FERMILAB PPD/ETT/ES CDMS (E-891)
ZIP MODULE
U40 DUAL NON_INVERTING BUFFER BLOCK

| SIZE | FSCM NO. | DWG. NO. | REV |
|---|---|---|---|
| A | | | |

SCALE | SHEET 12-7

| REVISIONS | | | |
|---|---|---|---|
| REV | DESCRIPTION | DATE | APPROVED |
| | | | |

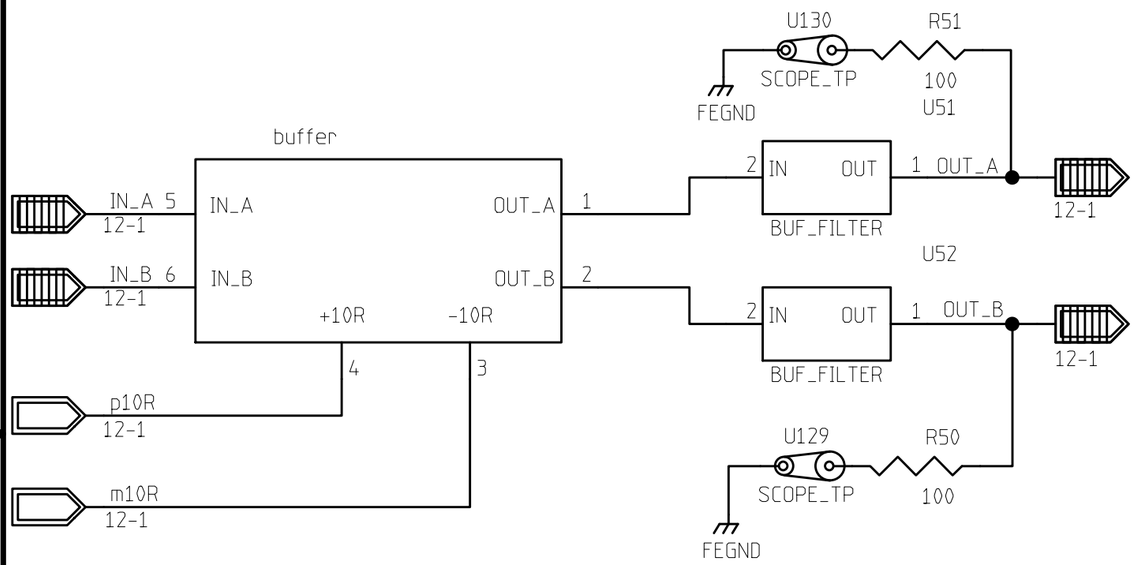


| | NAME | DATE |
|---|---|---|
| ORIGINATOR | MERLE HALDEMAN | 11/17/98 |
| DRAWN | BRUCE MERKEL | 12/10/98 |
| CHECKED | TOM CRENNA | 1/8/99 |
| APPROVED | | |

FERMILAB PPD/ETT/ES CDMS (E-891)
ZIP MODULE
U39 DUAL NON_INVERTING BUFFER BLOCK

| SIZE | FSCM NO. | DWG. NO. | REV |
|---|---|---|---|
| A | | | |

SCALE | SHEET 12-7

| REVISIONS | | | |
|---|---|---|---|
| REV | DESCRIPTION | DATE | APPROVED |
| | | | |

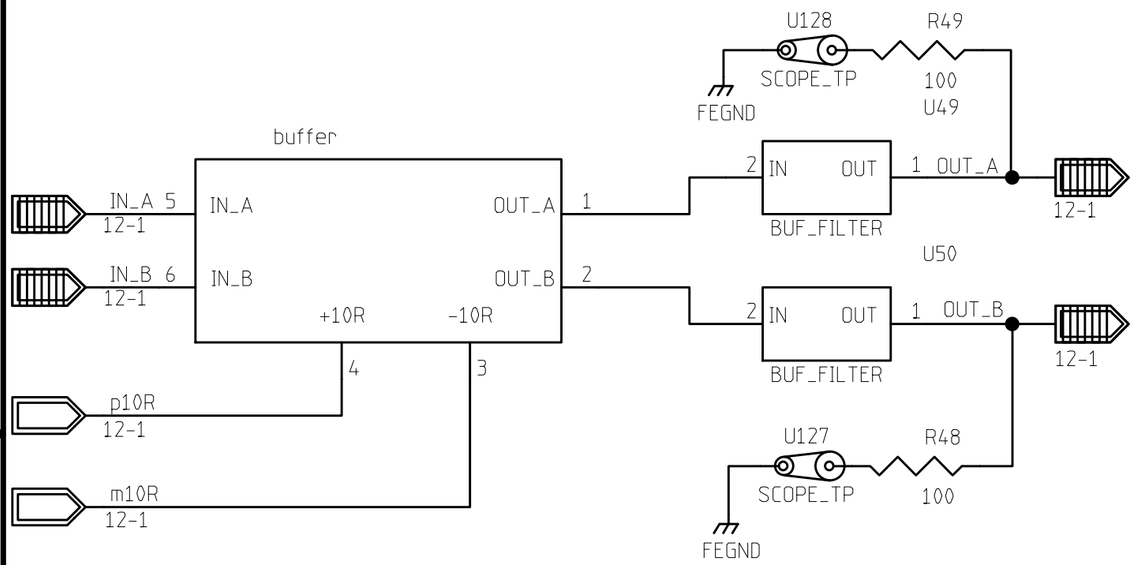


| | NAME | DATE |
|---|---|---|
| ORIGINATOR | MERLE HALDEMAN | 11/17/98 |
| DRAWN | BRUCE MERKEL | 12/10/98 |
| CHECKED | TOM CRENNA | 1/8/99 |
| APPROVED | | |

FERMILAB PPD/ETT/ES CDMS (E-891)
ZIP MODULE
U38 DUAL NON_INVERTING BUFFER BLOCK

| SIZE | FSCM NO. | DWG. NO. | REV |
|---|---|---|---|
| A | | | |

SCALE | SHEET 12-7

| REVISIONS | | | |
|---|---|---|---|
| REV | DESCRIPTION | DATE | APPROVED |
| | | | |

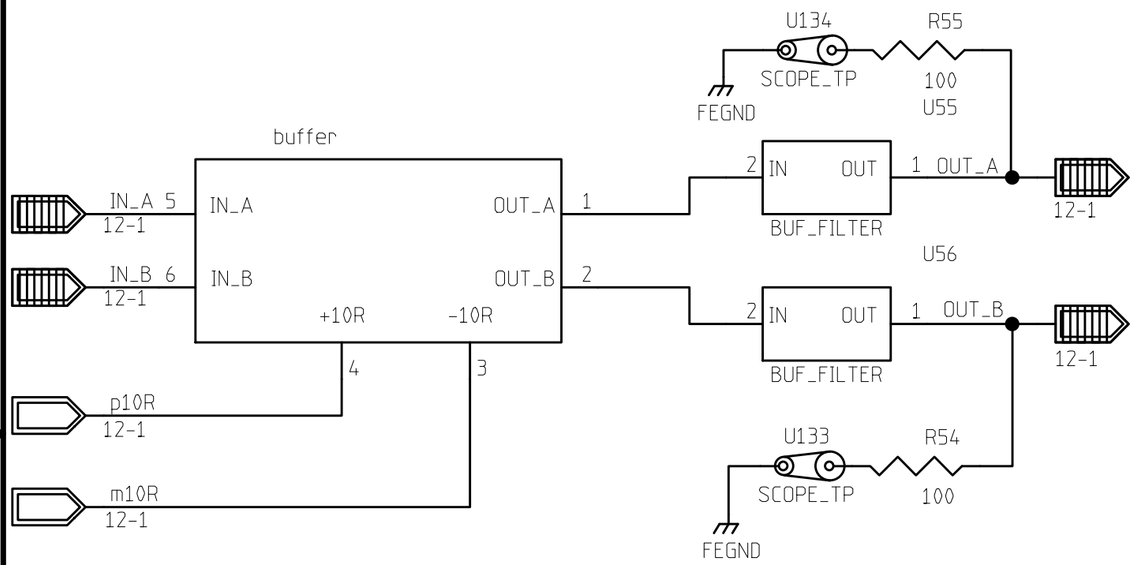


| | NAME | DATE |
|---|---|---|
| ORIGINATOR | MERLE HALDEMAN | 11/17/98 |
| DRAWN | BRUCE MERKEL | 12/10/98 |
| CHECKED | TOM CRENNA | 1/8/99 |
| APPROVED | | |

FERMILAB PPD/ETT/ES CDMS (E-891)
ZIP MODULE
U41 DUAL NON_INVERTING BUFFER BLOCK

| SIZE | FSCM NO. | DWG. NO. | REV |
|---|---|---|---|
| A | | | |

SCALE | SHEET 12-7

| REVISIONS | | | |
|---|---|---|---|
| REV | DESCRIPTION | DATE | APPROVED |
| | | | |

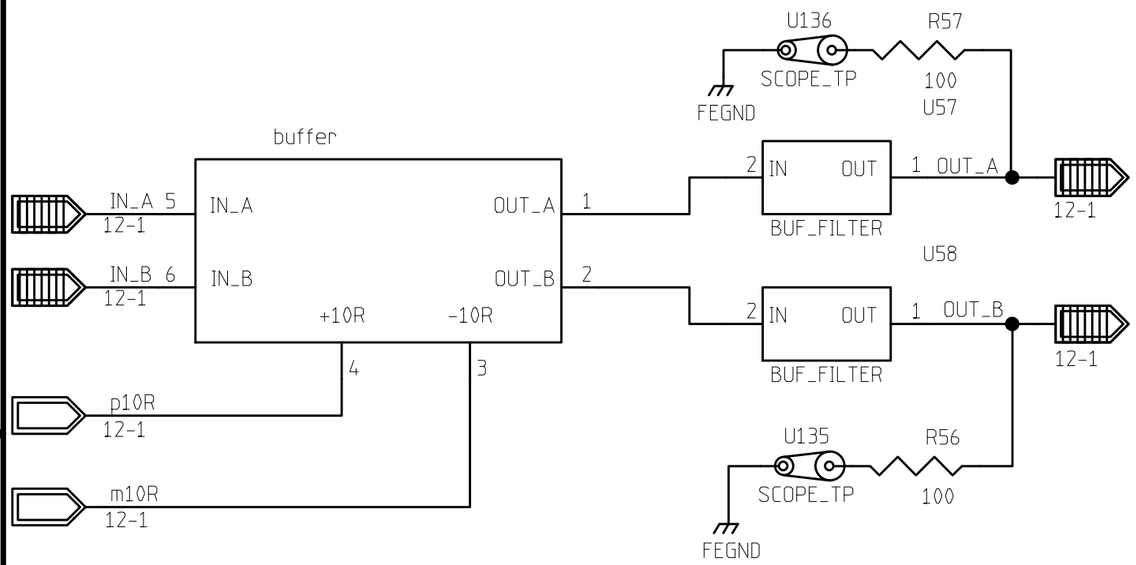


| | NAME | DATE |
|---|---|---|
| ORIGINATOR | MERLE HALDEMAN | 11/17/98 |
| DRAWN | BRUCE MERKEL | 12/10/98 |
| CHECKED | TOM CRENNA | 1/8/99 |
| APPROVED | | |

FERMILAB PPD/ETT/ES CDMS (E-891)
ZIP MODULE
U42 DUAL NON_INVERTING BUFFER BLOCK

| SIZE | FSCM NO. | DWG. NO. | REV |
|---|---|---|---|
| A | | | |

SCALE | SHEET 12-7

| REVISIONS | | | |
|---|---|---|---|
| REV | DESCRIPTION | DATE | APPROVED |
| | | | |

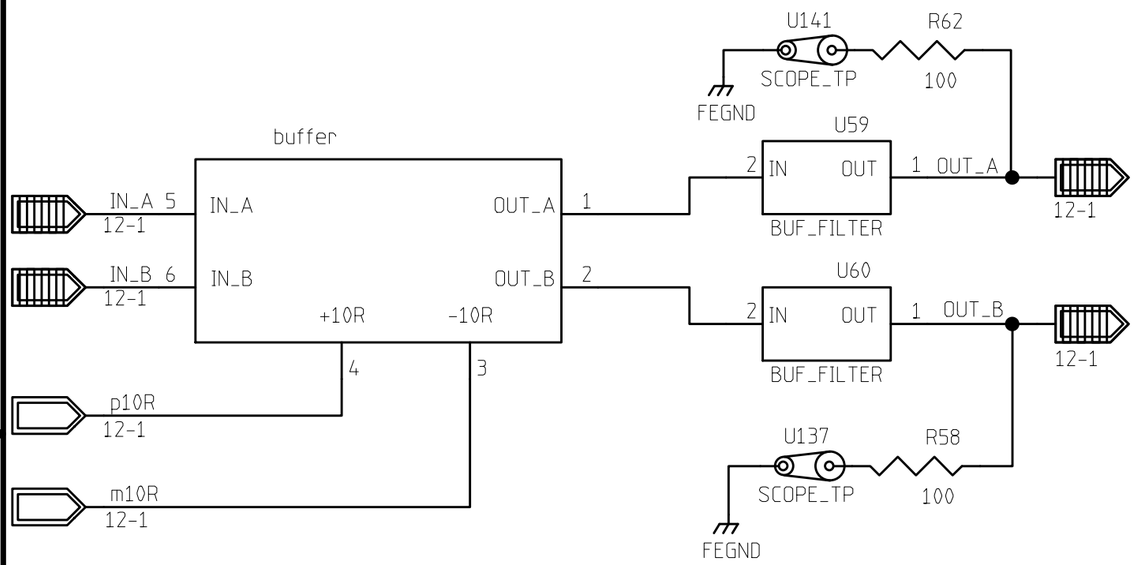


| | NAME | DATE |
|---|---|---|
| ORIGINATOR | MERLE HALDEMAN | 11/17/98 |
| DRAWN | BRUCE MERKEL | 12/10/98 |
| CHECKED | TOM CRENNA | 1/8/99 |
| APPROVED | | |

FERMILAB PPD/ETT/ES CDMS (E-891)
ZIP MODULE
U43 DUAL NON_INVERTING BUFFER BLOCK

| SIZE | FSCM NO. | DWG. NO. | REV |
|---|---|---|---|
| A | | | |

SCALE | SHEET 12-7

| REVISIONS | | | |
|---|---|---|---|
| REV | DESCRIPTION | DATE | APPROVED |
| | | | |

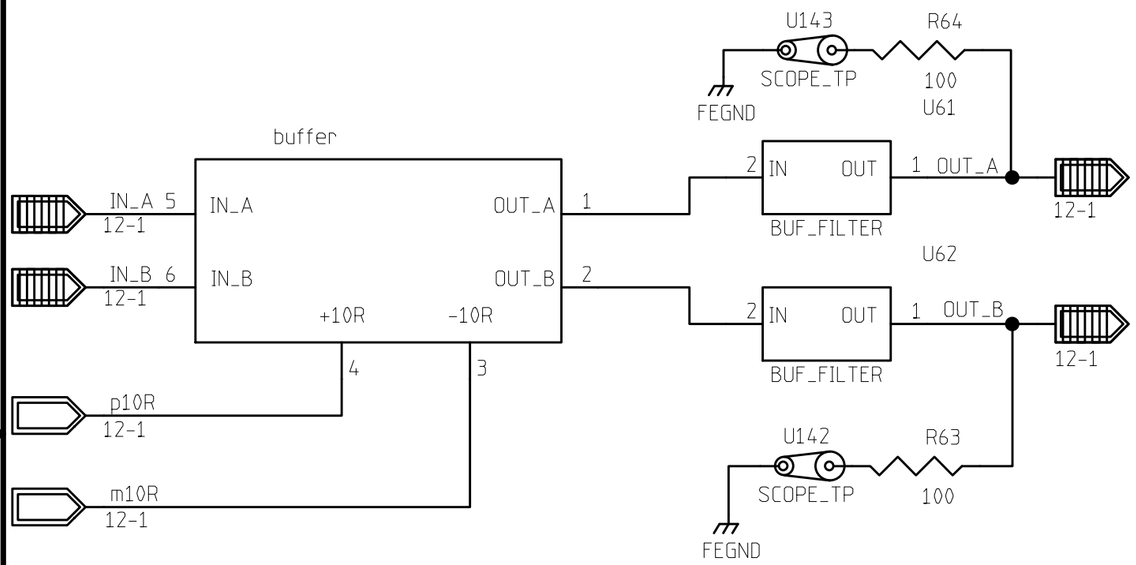


| | NAME | DATE |
|---|---|---|
| ORIGINATOR | MERLE HALDEMAN | 11/17/98 |
| DRAWN | BRUCE MERKEL | 12/10/98 |
| CHECKED | TOM CRENNA | 1/8/99 |
| APPROVED | | |

FERMILAB PPD/ETT/ES CDMS (E-891)
ZIP MODULE
U44 DUAL NON_INVERTING BUFFER BLOCK

| SIZE | FSCM NO. | DWG. NO. | REV |
|---|---|---|---|
| A | | | |

SCALE | SHEET 12-7

| REVISIONS | | | |
|---|---|---|---|
| REV | DESCRIPTION | DATE | APPROVED |
| | | | |

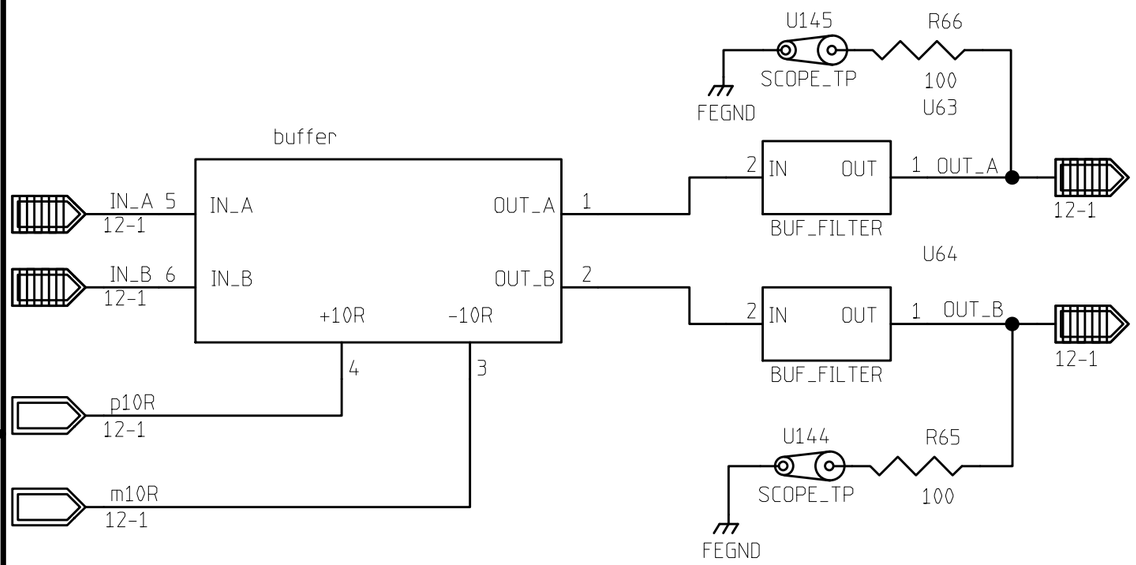


| | NAME | DATE |
|---|---|---|
| ORIGINATOR | MERLE HALDEMAN | 11/17/98 |
| DRAWN | BRUCE MERKEL | 12/10/98 |
| CHECKED | TOM CRENNA | 1/8/99 |
| APPROVED | | |

FERMILAB PPD/ETT/ES CDMS (E-891)
ZIP MODULE
U45 DUAL NON_INVERTING BUFFER BLOCK

| SIZE | FSCM NO. | DWG. NO. | REV |
|---|---|---|---|
| A | | | |

SCALE | SHEET 12-7

| REVISIONS | | | |
|---|---|---|---|
| REV | DESCRIPTION | DATE | APPROVED |
| | | | |

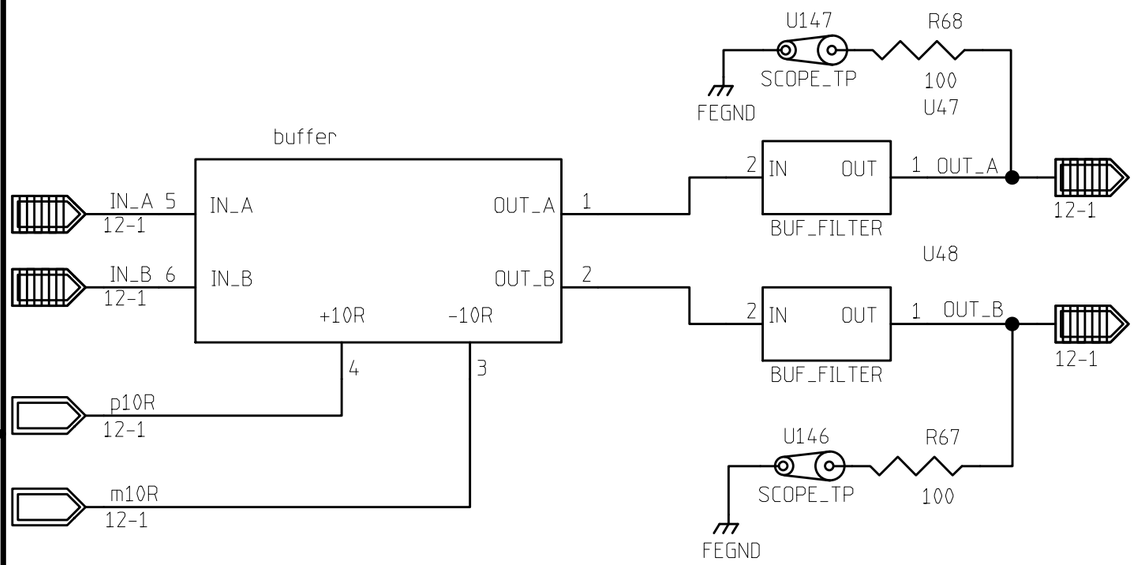


| | NAME | DATE |
|---|---|---|
| ORIGINATOR | MERLE HALDEMAN | 11/17/98 |
| DRAWN | BRUCE MERKEL | 12/10/98 |
| CHECKED | TOM CRENNA | 1/8/99 |
| APPROVED | | |

FERMILAB PPD/ETT/ES CDMS (E-891)
ZIP MODULE
U46 DUAL NON_INVERTING BUFFER BLOCK

| SIZE | FSCM NO. | DWG. NO. | REV |
|---|---|---|---|
| A | | | |

SCALE | SHEET 12-7

| REVISIONS | | | |
|---|---|---|---|
| REV | DESCRIPTION | DATE | APPROVED |
| | | | |

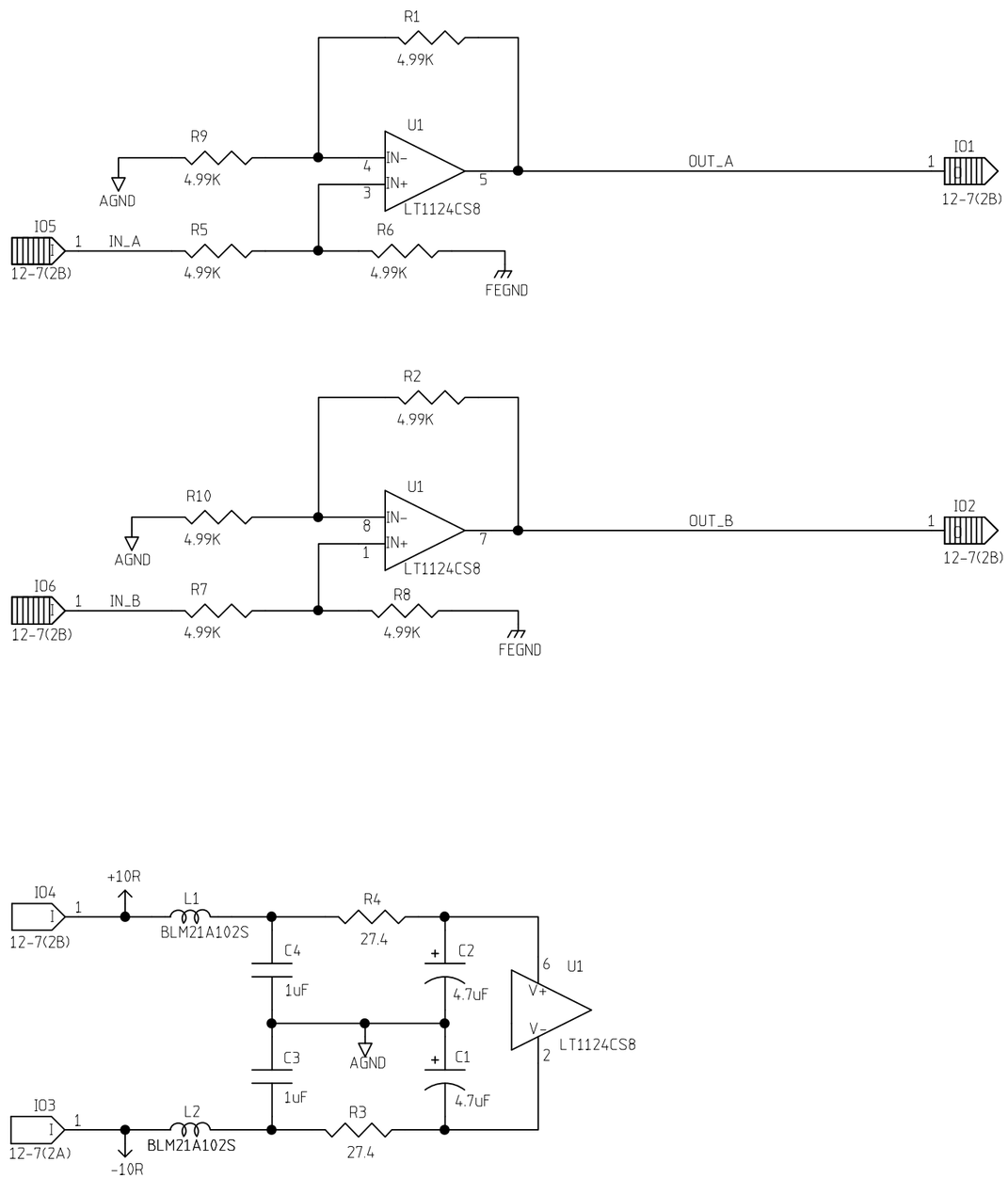


| | NAME | DATE |
|---|---|---|
| ORIGINATOR | MERLE HALDEMAN | 11/17/98 |
| DRAWN | BRUCE MERKEL | 11/17/98 |
| CHECKED | TOM CRENNA | 1/8/99 |
| APPROVED | | |

FERMILAB PPD/ETT/ES CDMS (E-891)
ZIP MODULE
DUAL NON-INVERTING BUFFERS

| SIZE | FSCM NO. | DWG. NO. | REV |
|---|---|---|---|
| B | | | |

SCALE | SHEET 12-8

| REVISIONS | | | |
|---|---|---|---|
| REV | DESCRIPTION | DATE | APPROVED |
| | | | |

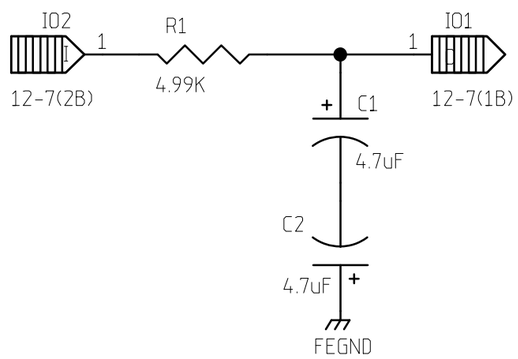


| | NAME | DATE |
|---|---|---|
| ORIGINATOR | MERLE HALDEMAN | 12/09/98 |
| DRAWN | BRUCE MERKEL | 12/09/98 |
| CHECKED | TOM CRENNA | 1/8/99 |
| APPROVED | | |

FERMILAB PPD/ETT/ES CDMS (E-891)
ZIP MODULE
BUFFER FILTER

| SIZE | FSCM NO. | DWG. NO. | REV |
|---|---|---|---|
| A | | | |

| SCALE | | SHEET 12-9 |
|---|---|---|

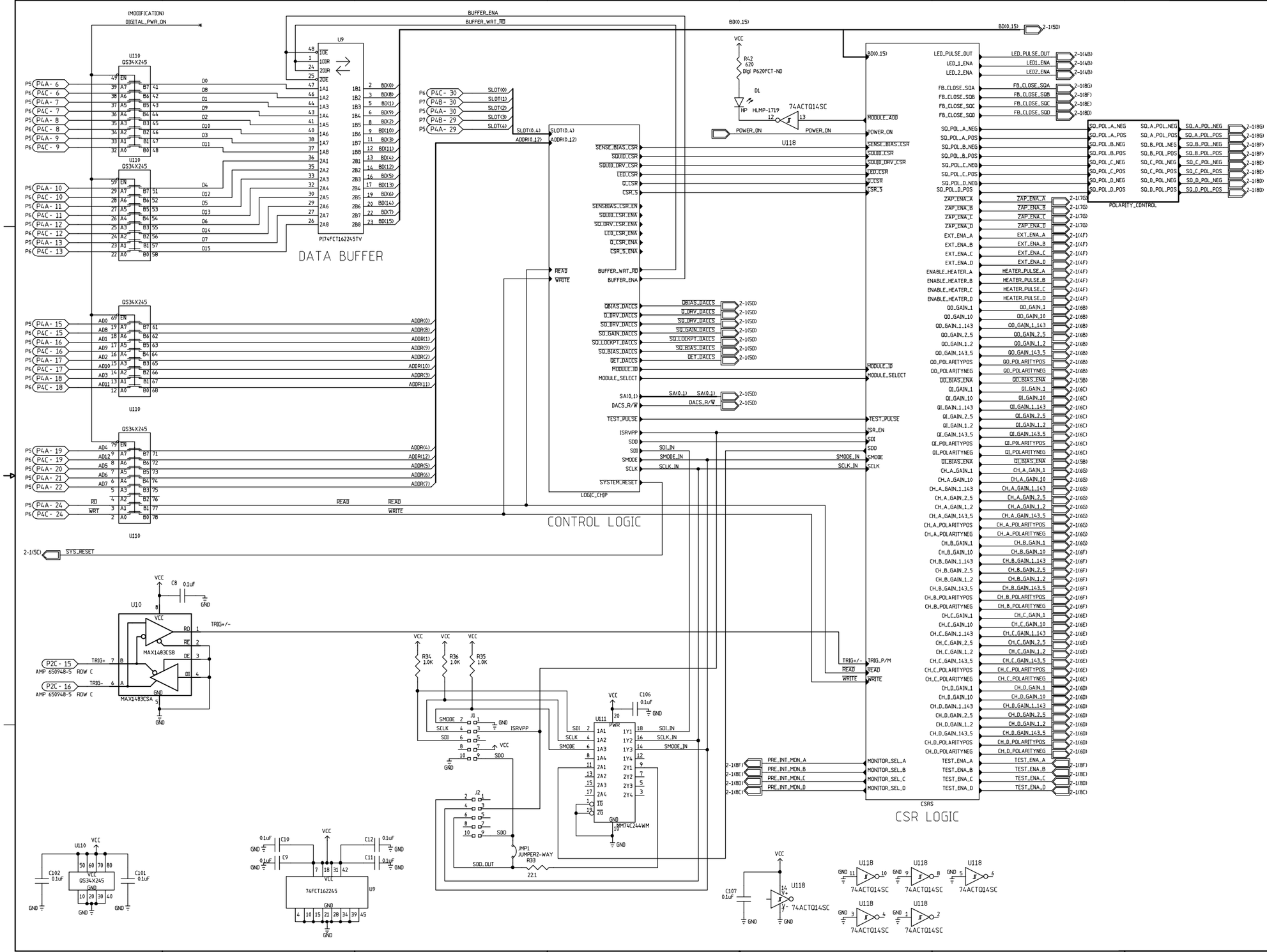


| REVISIONS | | | |
|---|---|---|---|
| REV | DESCRIPTION | DATE | APPROVED |
| | | | |

| | NAME | DATE |
|---|---|---|
| ORIGINATOR | MERLE HALDEMAN | 11/18/98 |
| DRAWN | BRUCE MERKEL | 11/18/98 |
| CHECKED | TOM CRENNA | 12/9/98 |
| APPROVED | | |

FERMILAB PPD/ EET/ ES CDMS(E-891)
ZIP MODULE
LOGIC BLOCK DIAGRAM

| SIZE | FSCM NO. | DWG. NO. | REV |
|---|---|---|---|
| D | | | |
| SCALE | | SHEET 13-1 | |

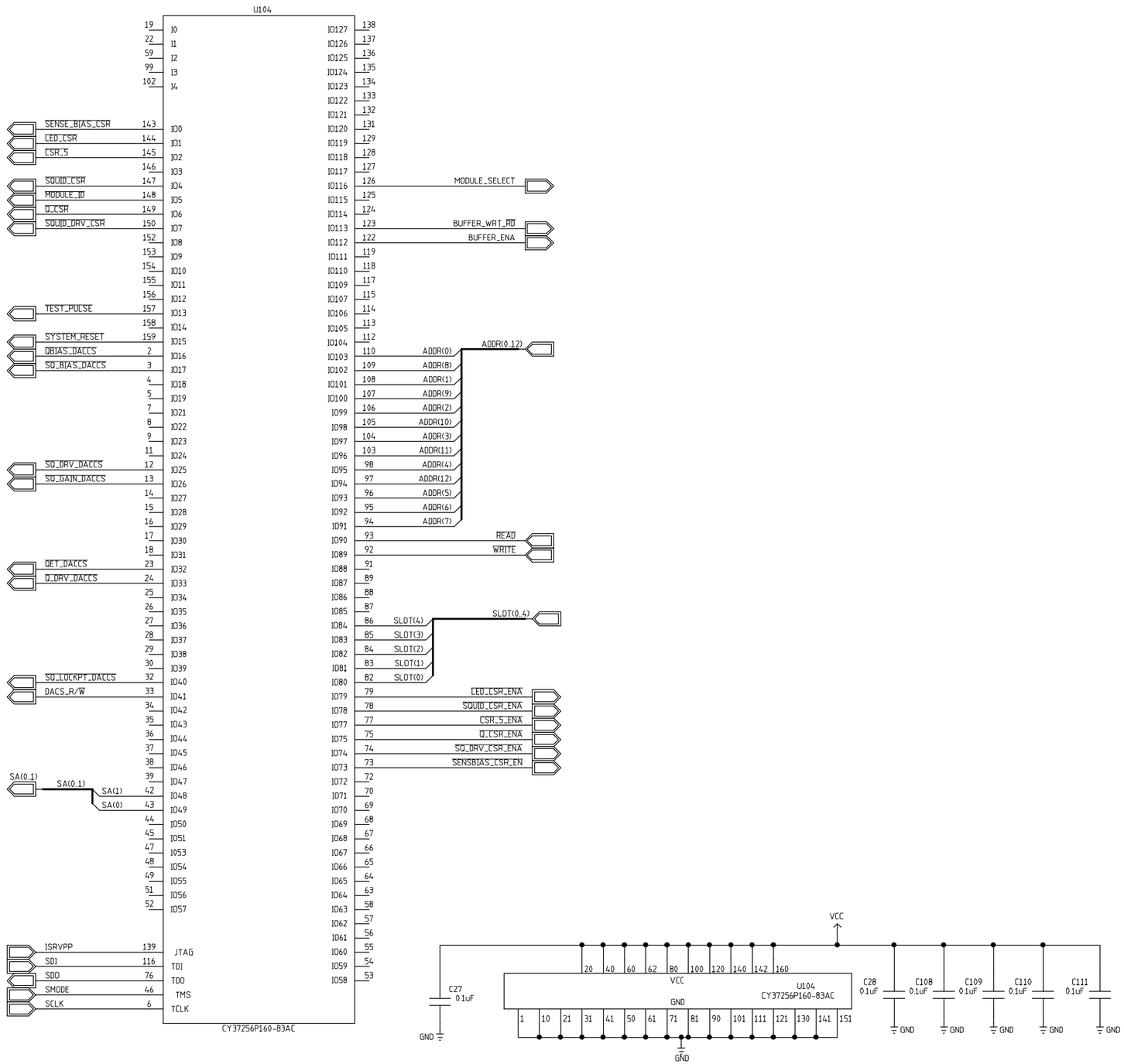


| REVISIONS | | | |
|---|---|---|---|
| REV | DESCRIPTION | DATE | APPROVED |
| | | | |

| | NAME | DATE |
|---|---|---|
| ORIGINATOR | MERLE HALDEMAN | 11/18/98 |
| DRAWN | BRUCE MERKEL | 11/18/98 |
| CHECKED | TOM CRENNA | 1/8/99 |
| APPROVED | | |

FERMILAB PPD/ EET/ ES CDMS(E-891)
ZIP MODULE
CONTROL LOGIC

| SIZE | FSCM NO. | DWG. NO. | REV |
|---|---|---|---|
| C | | | |
| SCALE | | SHEET 13-3 | |

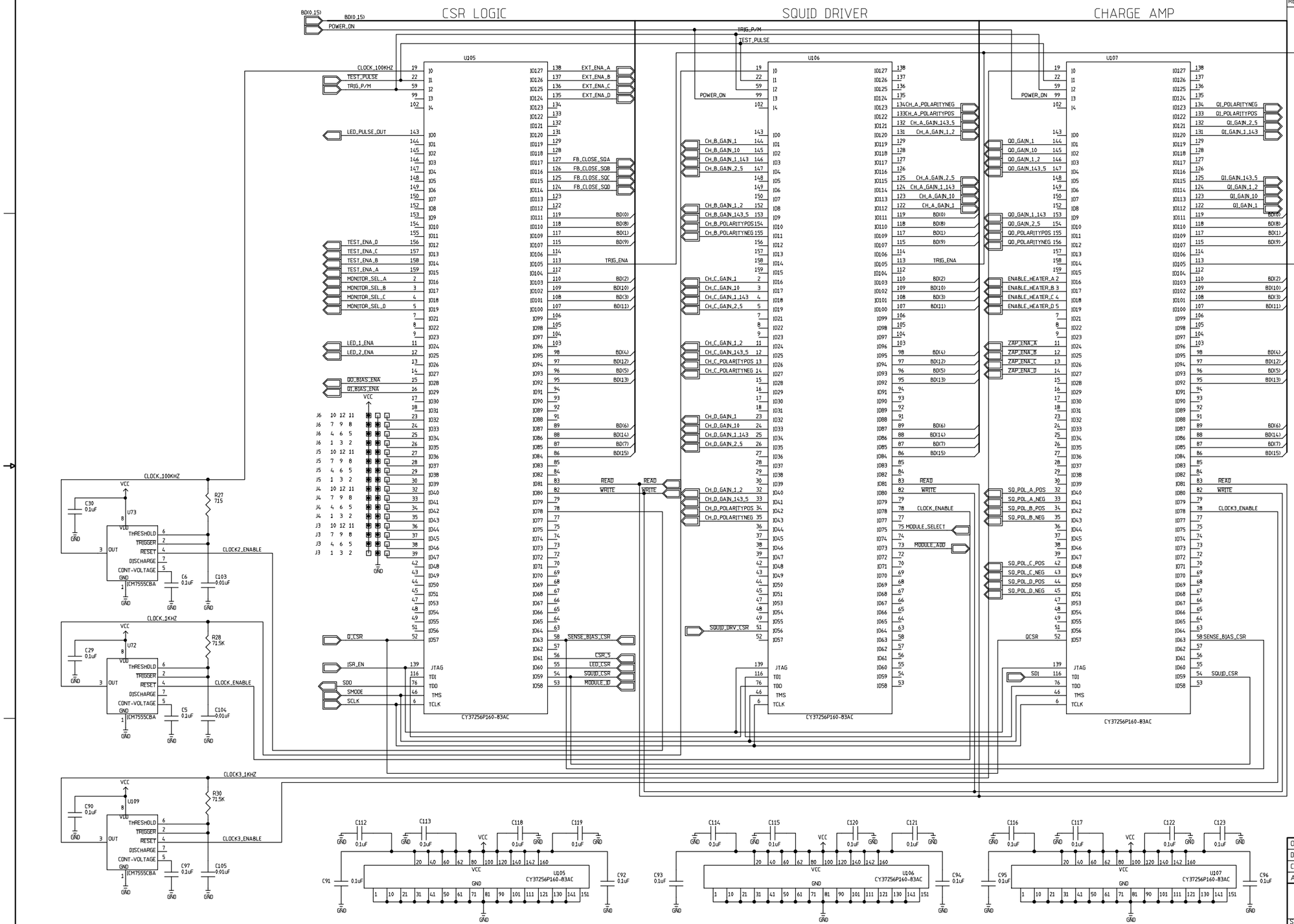
CSR LOGIC
SQUID DRIVER
CHARGE AMP
U105
U106
U107
CY37256P160-83AC
BD(0.15)
POWER_ON
TRIG_P/M
TEST_PULSE
CLOCK_100KHZ
LED_PULSE_OUT
TEST_ENA_D
TEST_ENA_C
TEST_ENA_B
TEST_ENA_A
MONITOR_SEL_A
MONITOR_SEL_B
MONITOR_SEL_C
MONITOR_SEL_D
LED_1_ENA
LED_2_ENA
QQ_BIAS_ENA
QI_BIAS_ENA
EXT_ENA_A
EXT_ENA_B
EXT_ENA_C
EXT_ENA_D
FB_CLOSE_SQA
FB_CLOSE_SQB
FB_CLOSE_SQC
FB_CLOSE_SQD
TRIG_ENA
READ
WRITE
CLOCK_ENABLE
MODULE_SELECT
MODULE_ADD
CLOCK3_ENABLE
SENSE_BIAS_CSR
CSR_5
LED_CSR
SQUID_CSR
MODULE_ID
SQUID_DRV_CSR
D_CSR
QCSR
JSR_EN
SDO
SMODE
SCLK
SDI
JTAG
TDI
TDO
TMS
TCLK
CLOCK2_ENABLE
CLOCK_1KHZ
CLOCK3_1KHZ
U73
U72
U109
ICM7555CBA
THRESHOLD
TRIGGER
RESET
DISCHARGE
CONT-VOLTAGE
OUT
VDD
GND
VCC
R27 715
R28 715K
R30 715K
C30 0.1uF
C29 0.1uF
C90 0.1uF
C6 0.1uF
C5 0.1uF
C97 0.1uF
C103 0.01uF
C104 0.01uF
C105 0.01uF
C112
C113
C118
C119
C114
C115
C120
C121
C116
C117
C122
C123
C91 0.1uF
C92 0.1uF
C93 0.1uF
C94 0.1uF
C95 0.1uF
C96 0.1uF
REVISIONS
REV
DESCRIPTION
DATE
APPROVED
DWG. NO.
SH.
ORIGINATOR
DRAWN
CHECKED
APPROVED
NAME
DATE
MERLE HALDEMAN
11/18/98
BRUCE MERKEL
11/18/98
TOM CRENNA
12/9/98
FERMILAB PPD/ EET/ ES CDMS(E-891)
ZIP MODULE
CSR LOGIC
SIZE
D
FSCM NO.
DWG. NO.
REV
SCALE
SHEET 13-4

| REVISIONS | | | |
|---|---|---|---|
| REV | DESCRIPTION | DATE | APPROVED |
| 0 | UNDER DEVELOPMENT | 1-20-99 | |

# 11mSEC ONE SHOT

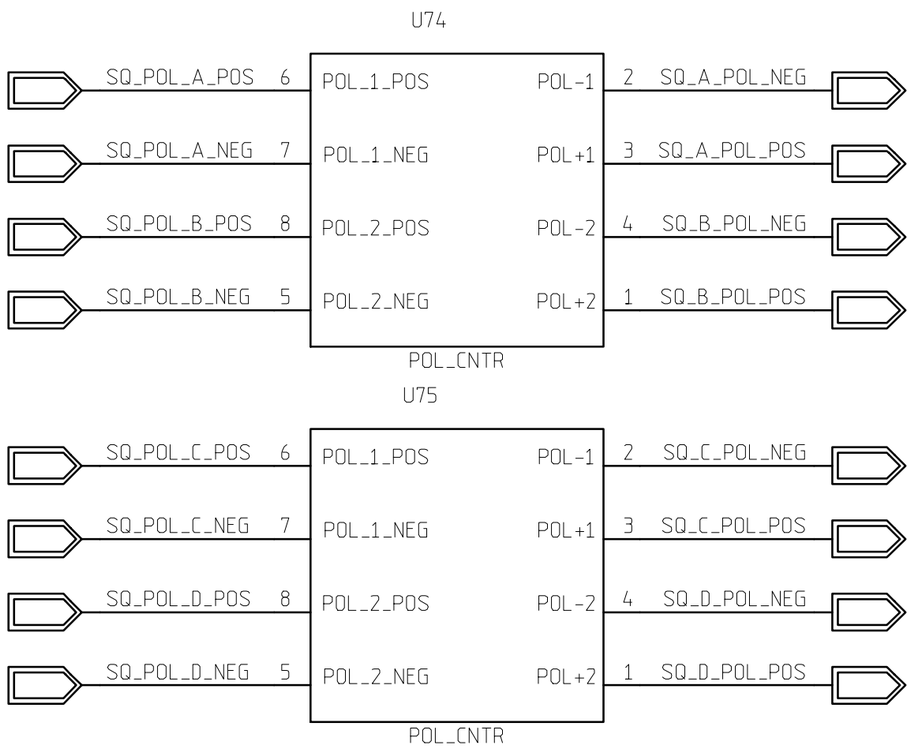


| | NAME | DATE |
|---|---|---|
| ORIGINATOR | MERLE HALDEMAN | 11/18/98 |
| DRAWN | BRUCE MERKEL | 11/18/98 |
| CHECKED | TOM CRENNA | 1/8/99 |
| APPROVED | | |

FERMILAB PPD/ETT/ES CDMS (E-891)
ZIP MODULE
POLARITY CONTROL

| SIZE | FSCM NO. | DWG. NO. | REV |
|---|---|---|---|
| A | | | |

SCALE | SHEET 13-5

| DWG. NO. | SH. | REV |
|---|---|---|
| | | |

| REVISIONS | | | |
|---|---|---|---|
| REV | DESCRIPTION | DATE | APPROVED |
| 0 | UNDER DEVELOPMENT | 1-20-99 | |

# 11mSEC PULSE

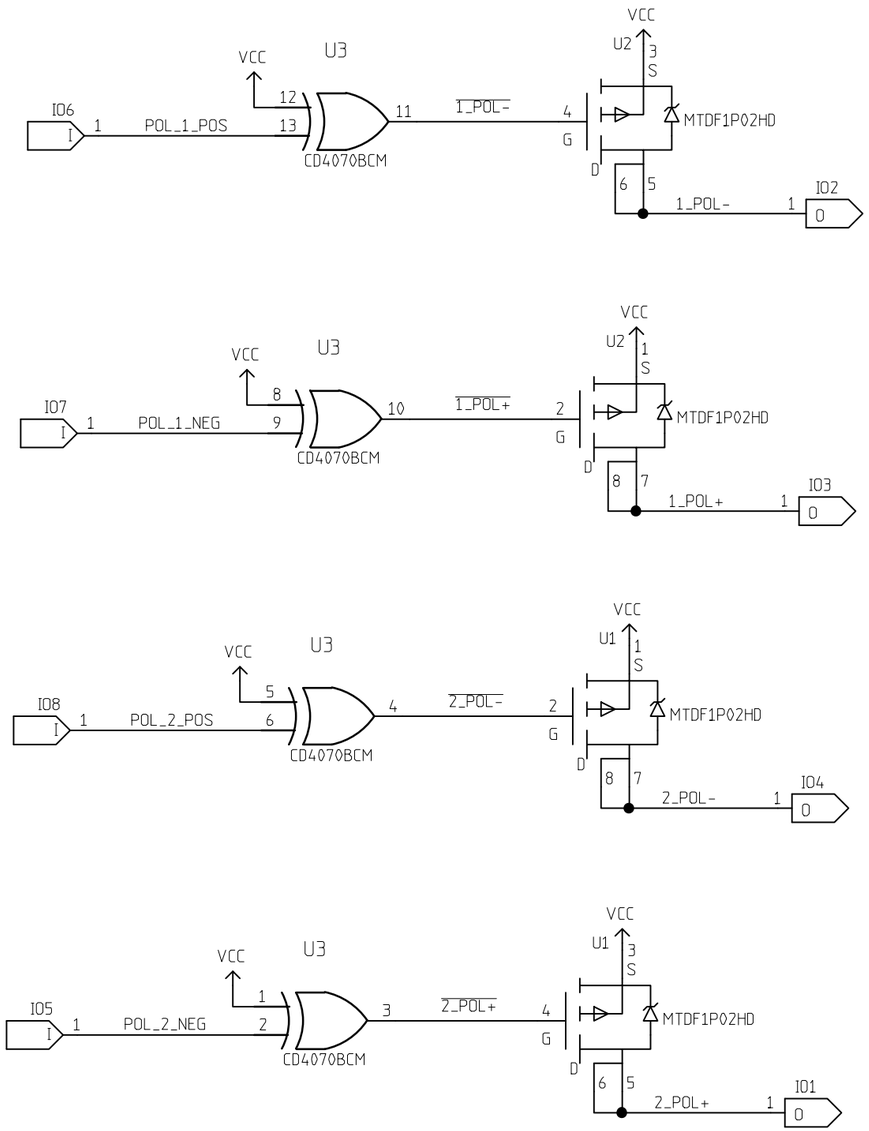


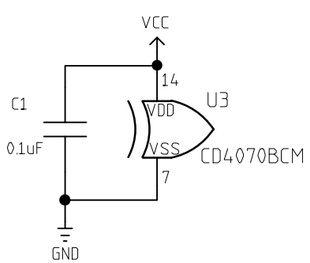


| | NAME | DATE |
|---|---|---|
| ORIGINATOR | MERLE HALDEMAN | 11/18/98 |
| DRAWN | BRUCE MERKEL | 11/18/98 |
| CHECKED | TOM CRENNA | 1/8/99 |
| APPROVED | | |

FERMILAB PPD/ETT/ES CDMS (E-891)
ZIP MODULE
POLARITY CONTROL

| SIZE | FSCM NO. | DWG. NO. | REV |
|---|---|---|---|
| B | | | |
| SCALE | | SHEET 13-5 | |

| REVISIONS | | | |
|---|---|---|---|
| REV | DESCRIPTION | DATE | APPROVED |
| 0 | UNDERDEVELOPMENT | 1/19/99 | |

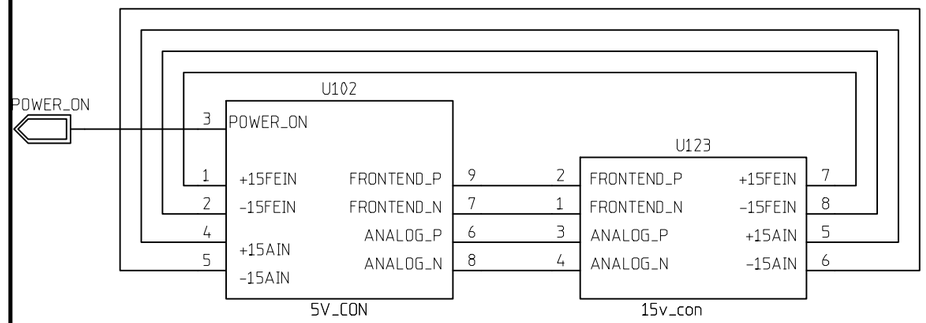


5 VOLT SECTION 15 VOLT SECTION

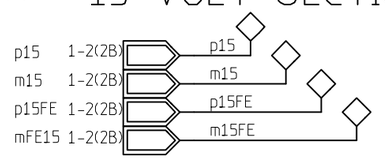


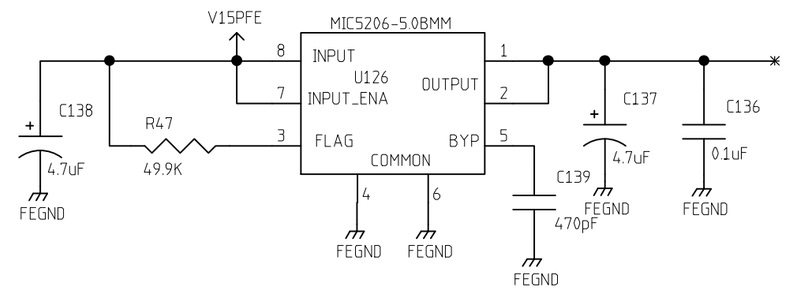


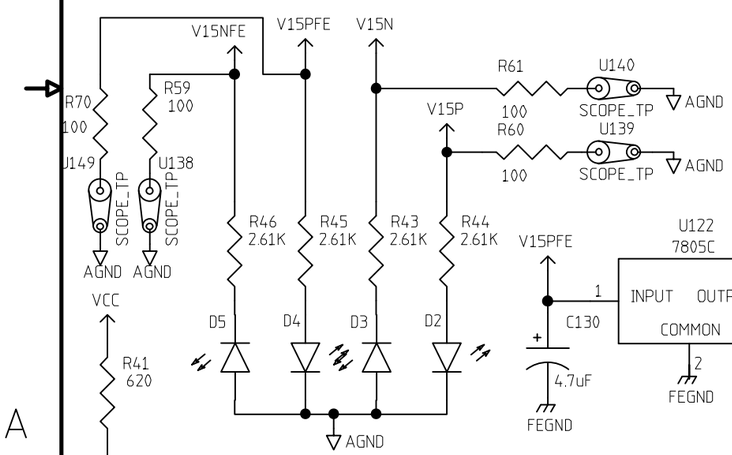


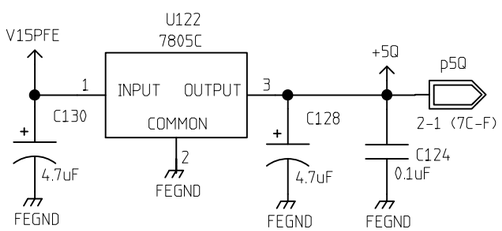


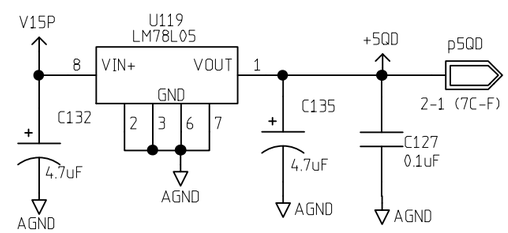


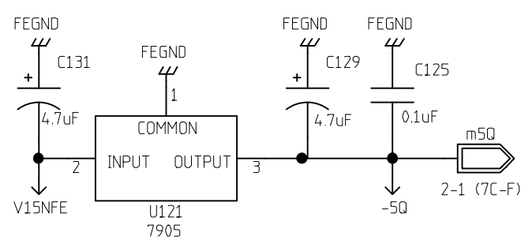


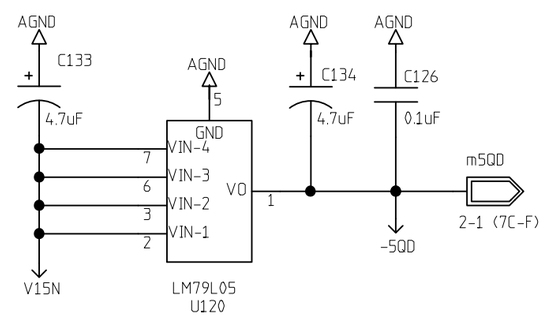


REF

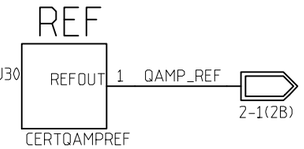


| | NAME | DATE |
|---|---|---|
| ORIGINATOR | MERLE HALDEMAN | 11/18/98 |
| DRAWN | BRUCE MERKEL | 11/18/98 |
| CHECKED | TOM CRENNA | 1/8/99 |
| APPROVED | | |

FERMILAB PPD/ETT/ES CDMS (E-891)
ZIP MODULE
POWER CONTROL

| SIZE | FSCM NO. | DWG. NO. | REV |
|---|---|---|---|
| B | | | |
| SCALE | | SHEET 14-1 | |

# POWER ON SEQUENCER

| REVISIONS | | | |
|---|---|---|---|
| REV | DESCRIPTION | DATE | APPROVED |
| | | | |

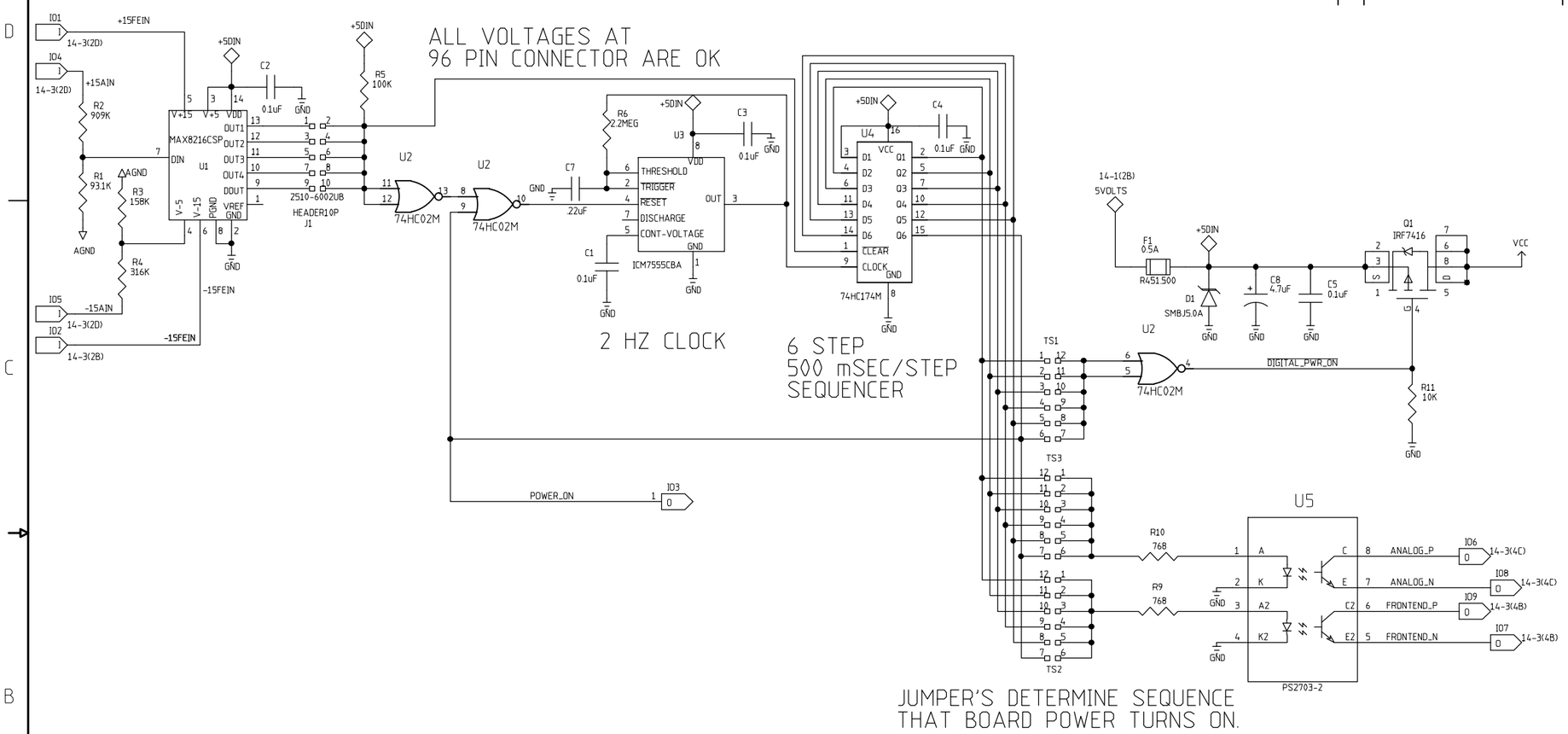


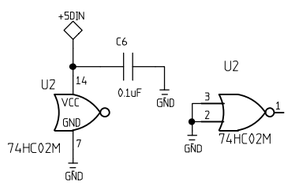


| | NAME | DATE |
|---|---|---|
| ORIGINATOR | MERLE HALDEMAN | 11/18/98 |
| DRAWN | BRUCE MERKEL | 11/18/98 |
| CHECKED | TOM CRENNA | 1/8/99 |
| APPROVED | | |

FERMILAB PPD/ETT/ES CDMS (E-891)
ZIP MODULE
5 VOLT SECTION

| SIZE | FSCM NO. | DWG. NO. | REV |
|---|---|---|---|
| C | | | |
| SCALE | | SHEET 14-2 | |

# POWER ON SEQUENCER CONTINUED

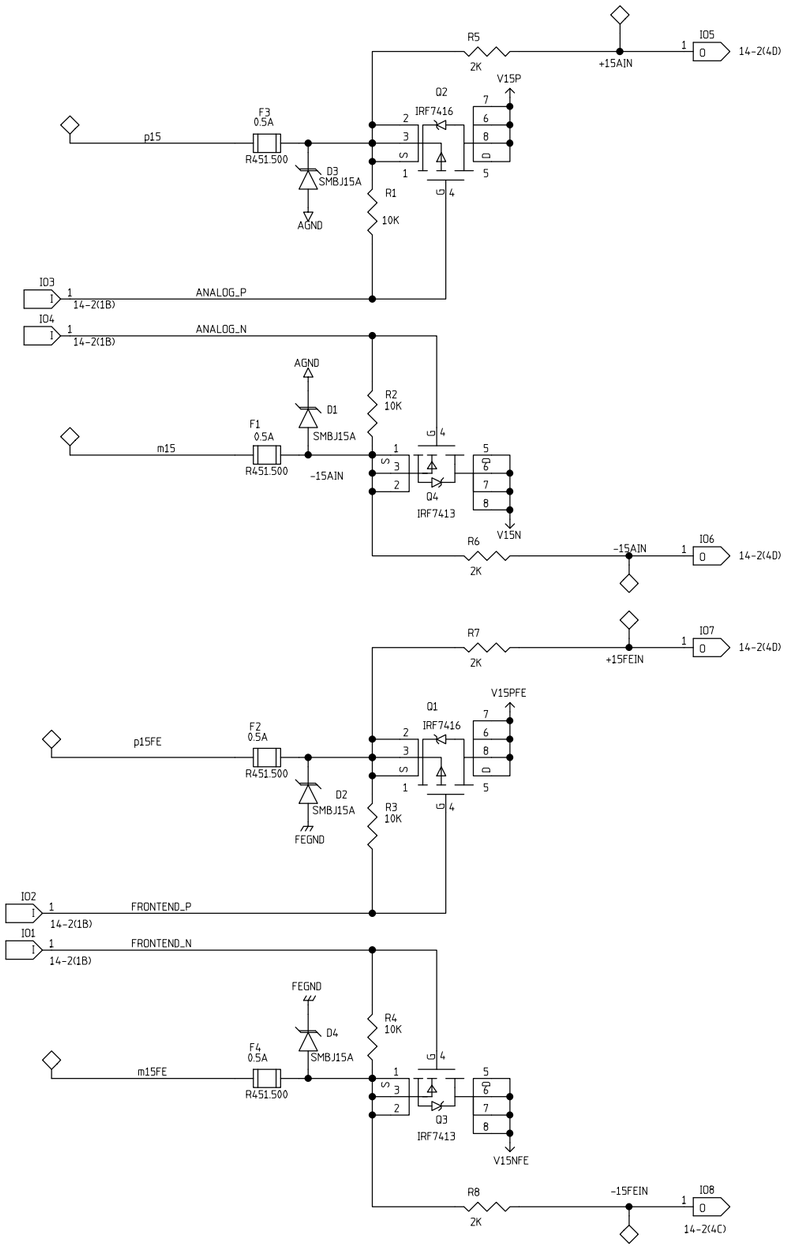


| REVISIONS | | | |
|---|---|---|---|
| REV | DESCRIPTION | DATE | APPROVED |
| | | | |

| | NAME | DATE |
|---|---|---|
| ORIGINATOR | MERLE HALDEMAN | 11/18/98 |
| DRAWN | BRUCE MERKEL | 11/18/98 |
| CHECKED | TOM CRENNA | 1/8/99 |
| APPROVED | | |

FERMILAB PPD/ETT/ES CDMS (E-891)
ZIP MODULE
15 VOLT SECTION

| SIZE | FSCM NO. | DWG. NO. | REV |
|---|---|---|---|
| C | | | |
| SCALE | | SHEET 14-3 | |

| REVISIONS | | | |
|---|---|---|---|
| REV | DESCRIPTION | DATE | APPROVED |
| | | | |

## 10 VOLT REFERENCE

## 10 VOLT BUFFER & NOISE FILTER

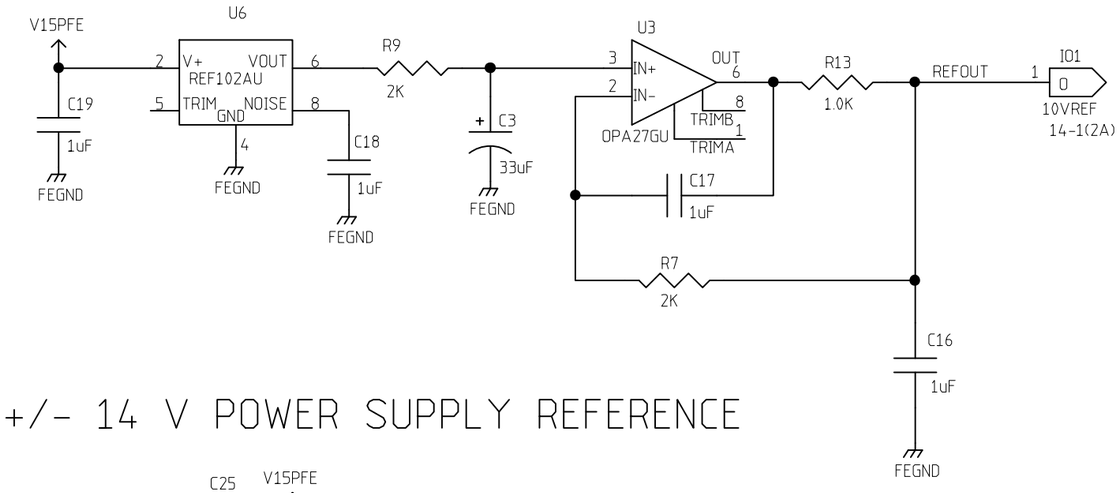


## +/- 14 V POWER SUPPLY REFERENCE

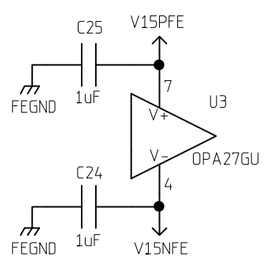


| | NAME | DATE |
|---|---|---|
| ORIGINATOR | MERLE HALDEMAN | 11/18/98 |
| DRAWN | BRUCE MERKEL | 11/18/98 |
| CHECKED | TOM CRENNA | 1/8/99 |
| APPROVED | | |

FERMILAB PPD/ETT/ES CDMS (E-891)
ZIP MODULE
Q AMP REFERENCE

| SIZE | FSCM NO. | DWG. NO. | REV |
|---|---|---|---|
| B | | | |

SCALE | SHEET 14-4