ORIGINAL

VERSION # 2

DATE REVISED

06 / 21 /00

03/20/2001

ZIP MODULE INDEX
(1/8/99)

VERSION 2 UPDATED

SCHEMATIC SECTION AND PAGE # **(X-X)**	QNTY BRD	SCH. PAGE	DATE CHECKED& MODIFIED	CCKT'S NUMBER	LAST PDF WRT DATE	BOM	LAST REV DATE
LEGEND **(COVER PAGE)**		6		N/A	3/25/99		
MISC. CONNECTORS **(1-1)**	1	7		N/A	5/3/00		
P2 CONNECTOR BLOCK **(1-2)**	1	8		N/A	7/27/99		
P4 CONNECTOR BLOCK **(1-3)**	1	9		N/A	7/27/99		
ZIP BLOCK DIAGRAM **(2-1)**	1	10		N/A	5/4/00		
SQUID BLOCK DIAGRAM **(3-1)**	4	11		N/A	9/9/99		
SQUID FRONT END **(3-2)**	1	15		CCM005	3/14/00		
SQUID VAR. GAIN AMP **(3-3)**	1	16		CCM006	3/14/00		
SQUID FEEDBACK CONTROL BLOCK **(3-4)**	4	17		N/A	9/9/99		
SQUID FEEDBACK INTEGRATOR **(3-5)**	1	21		CCM008	10/26/99		
SQUID FEEDBACK POLARITY **(3-6)**	1	22		CCM009	5/14/99		
SQUID FEEDBACK MONITOR **(3-7)**	1	23		CCM010	9/9/99		
SQUID FEEDBACK LOGIC **(3-8)**	1	24		CCM011	9/9/99		
SQUID ZAP CONTROLL **(4-1)**	1	25		CCM012	3/14/99		
QET BLOCK DIAGRAM **(5-1)**	1	26		N/A	10/18/99		
QET N BUFF **(5-2)**	1	27		CCM015	6/15/00		
QET FILTER **(5-3)**	XXXXX		XXXXX	CCM014	XXXX	XXX	XXX
QET SELECTOR **(5-4)**	1	28		CCM021	3/14/00		
QAMP BLOCK DIAGRAM **(6-1)**	1	29		N/A	4/20/00		
DISCRETE Q AMPLIFIER **(6-2)**	1	31		CCM001	3/13/00		
QAMP 14V **(6-3)**	1	32		CCM003	3/13/00		
QBIAS FRONT END **(7-1)**	1	33		CCM016	3/29/00		
LED BLOCK DIAGRAM **(8-1)**	1	34		N/A	5/14/99		
(8-2)				N/A			
LED PULSE CONTROL **(8-3)**	1	35		CCM028	3/14/00		
LED CURRENTCONTROL **(8-4)**	1	36		CCM020	3/14/00		
LED CURRENT SOURCE **(8-5)**	1	37		CCM019	3/14/00		
FETTEMP **(9-1)**	1	38		N/A	4/20/00		
DRIVER **(10-1)**	1	39		CCM002	5/4/00		
EXTERNAL TEST RECEIVER **(11-1)**	1	40		CCM022	5/4/00		
DAC&BUFFERS BLOCK DIAGRAM **(12-1)**	1	41		N/A	5/4/00		
DAC REFERENCES **(12-2)**	1	42		N/A	4/20/00		
DAC PRECISION REFERENCE **(12-3)**	1	43		CCM023	3/14/00		
DAC 10 VOLT REFERENCE **(12-4)**	1	44		CCM024	5/3/00		
DAC 5 VOLT REFERENCE **(12-5)**	XXXXX		XXXXX	CCM025	XXXX	XXX	XXX
DAC'S 1 TO 7 **(12-6)**	7	45		N/A	3/16/00		
DUAL NON-INVERT BUFFER BLOCK **(12-7)**	1	52		N/A	9/9/99		
DUAL NON-INVERT. BUFFERS **(12-8)**	1	61		CCM007	5/14/00		
BUFFER FILTER **(12-9)**	1	62		CCM017	1/25/99		
LOGIC BLOCK DIAGRAM **(13-1)**	1	63		N/A	5/4/00		
(13-2)				N/A			
CONTROL LOGIC **(13-3)**	1	64		N/A	3/15/00		
CSR LOGIC **(13-4)**	1	65		N/A	5/5/00		
POLARITY CONTROL BLOCK**(13-5)**	1	66		N/A	9/9/99		
POLARITY CONTROL **(13-6)**	1	67		CCM018	9/9/99		
(13-7)				N/A			
POWER CONTROL BLOCK DIAGRAM**(14-1)**	1	68		N/A	4/2/99		
5 VOLT SECTION **(14-2)**	1	69		CCM026	3/13/00		
15 VOLT SECTION **(14-3_)**	1	70		CCM027	10/19/99		
Q AMP REFERENCE **(14-4)**	1	71		CCM004	3/13/00		
OVERALL BLOCK DIAGRAM		72		N/A	6/21/00		

PART 1: SECTION, SUBSECTION DECODING

SECTION DAC/CSR name	SUBSECTION DAC/CSR	SUBSECTION NAME	section/subsection address	section decoding
Module Info	ID		xx00	zip logic
section 0	RESET		xx0F	zip logic
Sense Bias DAC	DAC 0	Sensor Bias A	xx1A	zip logic
section 1	DAC 1	Sensor Bias B	xx1B	zip logic
	DAC 2	Sensor Bias C	xx1C	zip logic
	DAC 3	Sensor Bias D	xx1D	zip logic
Squid Bias DAC	DAC 0	Squid Bias A	xx2A	zip logic
section 2	DAC 1	Squid Bias B	xx2B	zip logic
	DAC 2	Squid Bias C	xx2C	zip logic
	DAC 3	Squid Bias D	xx2D	zip logic
Squid Lock DAC	DAC 0	Squid Lock A	xx3A	zip logic
section 3	DAC 1	Squid Lock B	xx3B	zip logic
	DAC 2	Squid Lock C	xx3C	zip logic
	DAC 3	Squid Lock D	xx3D	zip logic
Squid Gain DAC	DAC 0	Squid Gain A	xx4A	zip logic
section 4	DAC 1	Squid Gain B	xx4B	zip logic
	DAC 2	Squid Gain C	xx4C	zip logic
	DAC 3	Squid Gain D	xx4D	zip logic
Squid Driver DAC	DAC 0	Squid Driver A	xx5A	zip logic
section 5	DAC 1	Squid Driver B	xx5B	zip logic
	DAC 2	Squid Driver C	xx5C	zip logic
	DAC 3	Squid Driver D	xx5D	zip logic
Q Driver DAC	DAC 0	Q O Driver	xx60	zip logic
section 6	DAC 1	Q I Driver	xx61	zip logic
	DAC 2	Test Voltage	xx62	zip logic
	DAC 3			zip logic
Q Bias DAC	DAC 0	Q O Bias	xx70	zip logic
section 7	DAC 1	Q I Bias	xx71	zip logic
	DAC 2	LED Bias	xx72	zip logic
	DAC 3	Zap Voltage	xx73	zip logic
unused				
section 8 to D				
CSR	CSR0	Sense Bias CSR	xxE0	zip logic
section E	CSR1	Squid CSR	xxE1	zip logic
	CSR2	Squid Driver CSR	xxE2	zip logic
	CSR3	LED CSR	xxE3	zip logic
	CSR4	Q CSR	xxE4	zip logic
	CSR5	CSR5	xxE5	zip logic
Test		Test Pulse	xxFF	zip logic
section F				

The Module is decoded from bits 8 to12 of the address bus

The SECTIONS are decoded from bits 4 to 7 of the address bus

The SUBSECTIONS are decoded from bits 0 to 3 of the address bus

Outputs are from logic #1: zip_logic3.vhd

PART 2: CSR SUBSECTION OUTPUTS vs DATA BUSS BITS

Data Bit	Sense Bias CSR	Squid CSR	Squid Driver CSR	LED CSR	Q CSR	CSR5	Module ID	Data Bit
BD0	EXT_ENA_A	FB_C/O_SQ_A	**CHA_GAIN0**	WIDTH_0	***Q_O_GAIN0***	TRIG_ENA	Serial Number bit 0	BD0
BD1	EXT_ENA_B	FB_C/O_SQ_B	**CHA_GAIN1**	WIDTH_1	***Q_O_GAIN1***		Serial Number bit 1	BD1
BD2	EXT_ENA_C	FB_C/O_SQ_C	**CHA_GAIN2**	WIDTH_2	***Q_O_GAIN2***		Serial Number bit 2	BD2
BD3	EXT_ENA_D	FB_C/O_SQ_D	**CHA_POLARITY**	WIDTH_3	***Q_O_POLARITY***		Serial Number bit 3	BD3
BD4	***HEAT_PULSE_A***	***SQ_POL_A_-***	**CHB_GAIN0**	WIDTH_4	***Q_I_GAIN0***	CH_A_DAO_ENA	Serial Number bit 4	BD4
BD5	***HEAT_PULSE_B***	***SQ_POL_B_-***	**CHB_GAIN1**	WIDTH_5	***Q_I_GAIN1***	CH_B_DAO_ENA	Serial Number bit 5	BD5
BD6	***HEAT_PULSE_C***	***SQ_POL_C_-***	**CHB_GAIN2**	WIDTH_6	***Q_I_GAIN2***	CH_C_DAO_ENA	Serial Number bit 6	BD6
BD7	***HEAT_PULSE_D***	***SQ_POL_D_-***	**CHB_POLARITY**	WIDTH_7	***Q_I_POLARITY***	CH_D_DAO_ENA	Serial Number bit 7	BD7
BD8		TEST_ENA_A	**CHC_GAIN0**	RATE_0	Q_O_ENA		Board Version bit 0	BD8
BD9		TEST_ENA_B	**CHC_GAIN1**	RATE_1	Q_I_ENA		Board Version bit 1	BD9
BD10		TEST_ENA_C	**CHC_GAIN2**	RATE_2	***Q_O_DAO_ENA***		Board Version bit 2	BD10
BD11		TEST_ENA_D	**CHC_POLARITY**	RATE_3	***Q_I_DAO_ENA***		Board Version bit 3	BD11
BD12	***ZAP_ENA_A***	PRE_INT_MON_A	**CHD_GAIN0**	RATE_4	LED_1_ENA		Board Type bit 0	BD12
BD13	***ZAP_ENA_B***	PRE_INT_MON_B	**CHD_GAIN1**	RATE_5	LED_2_ENA		Board Type bit 1	BD13
BD14	***ZAP_ENA_C***	PRE_INT_MON_C	**CHD_GAIN2**	RATE_6	LED_CTRL_0		Board Type bit 2	BD14
BD15	***ZAP_ENA_D***	PRE_INT_MON_D	**CHD_POLARITY**	RATE_7	LED_CTRL_1		Board Type bit 3	BD15

Register outputs that are PLAIN text are outputs of the latching register: logic #2: csr_logic3.vhd

Register outputs that are BOLD text are outputs that are pulses from logic #3: ziprelay2.vhd

Register outputs that are bold and italized text are outputs that are pulses from logic #4: chargeamps.vhd

Module Info ID bits are read only. These are shorts to +VCC or GND to set the condition

PART 3: GAIN AND POLARITY DECODING MATRIZ

POLARITY	2	1	0	GAIN
0	0	0	0	1
0	0	0	1	1.43
0	0	1	0	2
0	0	1	1	5
0	1	0	0	10
0	1	0	1	14.3
0	1	1	0	20
0	1	1	1	50
1	0	0	0	-1
1	0	0	1	-1.43
1	0	1	0	-2
1	0	1	1	-5
1	1	0	0	-10
1	1	0	1	-14.3
1	1	1	0	-20
1	1	1	1	-50

Data bits to the DACs set the output voltage level

DAC output voltage calculation:
Vout=Vrefl +((Vrefh-Vrefl) * N)/4096
N= is digital code in decimal

NOTE:
ALL SIGNAL NAMES ARE HIGH TRUE

LED_CTRL_1	LED_CTRL_0	
0	0	OFF
0	1	SINGLE
1	0	MULTI
1	1	ON

PART 5: Module Address decode vs. slot number

Address		Slot Number
xxx0 0000 xxxx xxxx	00xx	0
xxx0 0001 xxxx xxxx	01xx	1
xxx0 0010 xxxx xxxx	02xx	2
xxx0 0011 xxxx xxxx	03xx	3
xxx0 0100 xxxx xxxx	04xx	4
xxx0 0101 xxxx xxxx	05xx	5
xxx0 0110 xxxx xxxx	06xx	6
xxx0 0111 xxxx xxxx	07xx	7
xxx0 1000 xxxx xxxx	08xx	8
xxx0 1001 xxxx xxxx	09xx	9
xxx0 1010 xxxx xxxx	0Axx	10
xxx0 1011 xxxx xxxx	0Bxx	11
xxx0 1100 xxxx xxxx	0Cxx	12
xxx0 1101 xxxx xxxx	0Dxx	13
xxx0 1110 xxxx xxxx	0Exx	14
xxx0 1111 xxxx xxxx	0Fxx	15
xxx1 0000 xxxx xxxx	10xx	16
xxx1 0001 xxxx xxxx	11xx	17
xxx1 0020 xxxx xxxx	12xx	18
xxx1 0011 xxxx xxxx	13xx	19
xxx1 0100 xxxx xxxx	14xx	20
xxx1 0101 xxxx xxxx	15xx	21

PART 4: CHIPS AND DECODED OUTPUTS TO ZIP BOARD CIRCUITS

These are the names of the chips, the project name that the code is found in and the outputs by name that they decode for the ZIP board

project name:chargeamps CHARGE AMP	project name: zipchips CSR_LOGIC3	project name:ziprelay2 ZIPRELAY2	project name: addrlogic ZIP_LOGIC3
qo_gain_1	qo_ena	chA_gain_1	moduleid
qo_gain_10	qi_ena	chA_gain_10	sense_bias_dac
qo_gain_1_143	led_1_ena	chA_gain_1_143	squid_bias_dac
qo_gain_2_5	led_2_ena	chA_gain_2_5	squid_lock_dac
qo_gain_1_2	ext_ena_A	chA_gain_1_2	squid_gain_dac
qo_gain_143_5	ext_ena_B	chA_gain_143_5	squid_driver_dac
qo_pol_pos	ext_ena_C	chA_pol_pos	q_driver_dac
qo_pol_neg	ext_ena_D	chA_pol_neg	q_bias_dac
qi_gain_1	fb_c/o_sq_A	chB_gain_1	sense_bias_csr
qi_gain_10	fb_c/o_sq_B	chB_gain_10	squid_csr
qi_gain_1_143	fb_c/o_sq_C	chB_gain_1_143	squid_driver_csr
qi_gain_2_5	fb_c/o_sq_D	chB_gain_2_5	led_csr
qi_gain_1_2	test_ena_A	chB_gain_1_2	q_csr
qi_gain_143_5	test_ena_B	chB_gain_143_5	csr5
qi_pol_pos	test_ena_C	chB_pol_pos	rw
qi_pol_neg	test_ena_D	chB_pol_neg	rst
zap_ena_A	pre_int_mon_A	chC_gain_1	testpulse
zap_ena_B	pre_int_mon_B	chC_gain_10	buffer_read
zap_ena_C	pre_int_mon_C	chC_gain_1_143	buffer_write
zap_ena_D	pre_int_mon_D	chC_gain_2_5	moduleselect
heat_pulse_A	trig_ena	chC_gain_1_2	
heat_pulse_B	led_pulse_out	chC_gain_143_5	*sense_bias_csr_ena*
heat_pulse_C	clockena	chC_pol_pos	*squid_csr_ena*
heat_pulse_D		chC_pol_neg	*squid_driver_csr_ena*
sq_pol_A_pos	CH_A_DAO_ENA	chD_gain_1	*led_csr_ena*
sq_pol_A_neg	CH_B_DAO_ENA	chD_gain_10	*q_csr_ena*
sq_pol_B_pos	CH_C_DAO_ENA	chD_gain_1_143	*csr5_ena*
sq_pol_B_neg	CH_D_DAO_ENA	chD_gain_2_5	NOTE:
sq_pol_C_pos		chD_gain_1_2	These _ena outputs
sq_pol_C_neg		chD_gain_143_5	are for test purposes
sq_pol_D_pos	READ ONLY INFO	chD_pol_pos	and have no
sq_pol_D_neg	module configuration	chD_pol_neg	functional connection
clockena		moduleaddr	to the board
		clockena	
Q_O_DAO_ENA			
Q_I_DAO_ENA	**CONTROL INPUTS FROM ZIP_LOGIC**		
sense_bias_csr	sense_bias_csr	squid_driver_csr	
squid_csr	squid_csr	moduleselect	
q_csr	q_csr		
	csr5		
	led_csr		
	moduleid		
testpulse	testpulse		
	CONTROL INPUTS FROM CSR_LOGIC3		
trig_ena			
	CONTROL INPUTS FROM OTHER SOURCES		
read	read	read	read
write	write	write	write
	rst	rst	slot(4 downto 0)
poweron	poweron	poweron	addr(15 downto 0)
trigplus_minus	trigplus_minus		

This file is named Backplane Pinout.xls
and can be found at
Network Neighborhood\Ppdserver1\ETT.PPD\PROJECTS\Ett_ES\CDMS\crates\9U

J1 — 50 Pin D Connector, Detector I/O, Slots 1 thru 9, and 12 thru 20 [Crate Front View]

Pin #		Pin #		Pin #	
50	Qi Feedback			17	FEGND
		33	FEGND		
49	FET Temp+			16	Qi Drain
		32	FEGND		
48	FEGND			15	Qi Bias
		31	Qi Source		
47	FEGND			14	FEGND
		30	Qo Feedback		
46	FET Heater-			13	FEGND
		29	FEGND		
45	FET Heater +			12	Qo Drain
		28	FEGND		
44	FEGND			11	Qo Bias
		27	Qo Source		
43	FEGND			10	FEGND
		26	LED 2		
42	LED 1			9	FEGND
		25	FEGND		
41	FBout C			8	SQUID Bias C
		24	FEGND		
40	FEGND			7	QET Bias C
		23	SQUID Bias D		
39	FEGND			6	FEGND
		22	Fbout D		
38	QET Bias D			5	FEGND
		21	FEGND		
37	FBout A			4	SQUID Bias A
		20	FEGND		
36	FEGND			3	QET Bias A
		19	SQUID Bias B		
35	QET Bias B			2	FBout B
		18	FEGND		
34	FEGND			1	FEGND

The backplane connector is
part # AMP 205211-2

The mating connector on the
module is part # AMP 745355-4

This ZIP connector will be mounted to a brass plate
that is machined to match the backplane connector

J2 — 48 Pin DIN Connector, Crate Power, Slots 1 thru 21 [Crate Front View]

Pin #	Row A	Row B	Row C
1	FEGND	Aux Heater Power+	FEGND
2	FEGND	Aux Heater Power-	FEGND
3	FE +15	FE +15	FE +15
4	FEGND	FEGND	FEGND
5	FE -15	FE -15	FE -15
6	FEGND	FEGND	FEGND
7	FEGND	FEGND	FEGND
8	AGND	AGND	AGND
9	A15+	A15+	A15+
10	AGND	AGND	AGND
11	A15-	A15-	A15-
12	AGND	AGND	AGND
13	10Hz+	AGND	VARIABLE+
14	10Hz-	AGND	VARIABLE-
15	1kHz+	**Spare**	Trig+
16	1kHz-	**Spare**	Trig-

The backplane connector is
part # AMP 535034-4

The mating connector on the
module is part # AMP 650948-5

This connector information is the same for
both the ZIP and RTF modules

J3 — 25 Pin D Connector, Detector Output, Slots 1 thru 9, and 12 thru 20 [Crate Front View]

Pin #			Pin #
		Spare 3	13
25	AGND		
		SQD offset Mon	12
24	AGND		
		SQC offset Mon	11
23	AGND		
		SQB offset Mon	10
22	AGND		
		SQA offset Mon	9
21	AGND		
		Spare 2	8
20	AGND		
		Spare 1	7
19	AGND		
		SQUID D	6
18	AGND		
		SQUID C	5
17	AGND		
		SQUID B	4
16	AGND		
		SQUID A	3
15	AGND		
		Qo Out	2
14	AGND		
		Qi Out	1

The backplane connector is
part # AMP 207463-1

The mating connector on the
module is part # AMP 745353-4

This ZIP connector is mounted
to a machined cutout in the
backplane.

J4-1 — Slots 1 thru 20, Detector n (n = 1 through 18) [Crate Front View]

Pin #	Row A	Row B	Row C
1	5 Volts	5 Volts	5 Volts
2	5 Volts	5 Volts	5 Volts
3	5 Volts	5 Volts	5 Volts
4	5 Volts	5 Volts	5 Volts
5	DGND	DGND	DGND
6	D0	DGND	D8
7	D1	DGND	D9
8	D2	DGND	D10
9	D3	DGND	D11
10	D4	DGND	D12
11	D5	DGND	D13
12	D6	DGND	D14
13	D7	DGND	D15
14	DGND	DGND	DGND
15	A 0	DGND	A 8
16	A 1	DGND	A 9
17	A 2	DGND	A 10
18	A 3	DGND	A 11
19	A 4	DGND	A 12
20	A 5	DGND	A 13
21	A 6	DGND	A 14
22	A 7	DGND	A 15
23	DGND	DGND	DGND
24	Read	DGND	Write
25	DGND	DGND	DGND
26	5 Volts	5 Volts	5 Volts
27	5 Volts	5 Volts	5 Volts
28	5 Volts	5 Volts	5 Volts
29	Local Address A4	Local Address A3	5 Volts
30	Local Address A2	Local Address A1	Local Address A0
31	DGND	DGND	DGND
32	Bussed Spare 1	Bussed Spare 2	Sync out

The backplane connector is
part # AMP 535032-4

The mating connector on the
module is part # AMP 650947-5

This connector information is the same for
both the ZIP and RTF modules

J4-2 — Slot 21, GPIB Controller [Crate Front View]

Row A	Row B	Row C	Pin #
spare	5 Volts	Trig1-	1
spare	5 Volts	Trig1+	2
5 Volts	5 Volts	spare	3
5 Volts	5 Volts	spare	4
DGND	DGND	DGND	5
D0	DGND	D8	6
D1	DGND	D9	7
D2	DGND	D10	8
D3	DGND	D11	9
D4	DGND	D12	10
D5	DGND	D13	11
D6	DGND	D14	12
D7	DGND	D15	13
DGND	DGND	DGND	14
A 0	DGND	A 8	15
A 1	DGND	A 9	16
A 2	DGND	A 10	17
A 3	DGND	A 11	18
A 4	DGND	A 12	19
A 5	DGND	A 13	20
A 6	DGND	A 14	21
A 7	DGND	A 15	22
DGND	DGND	DGND	23
Read	DGND	Write	24
DGND	DGND	DGND	25
5 Volts	5 Volts	5 Volts	26
5 Volts	5 Volts	5 Volts	27
5 Volts	5 Volts	5 Volts	28
5 Volts	5 Volts	5 Volts	29
5 Volts	5 Volts	5 Volts	30
DGND	DGND	DGND	31
Bussed Spare 1	Bussed Spare 2	Sync out	32

The backplane connector is
part # AMP 535032-4

The mating connector on the
module is part # AMP 650947-5

This connector information is the same for
both the ZIP and RTF modules

J5 — 37 Pin D Connector, DC Power Sense Outputs [Crate Front View]

Pin #			Pin #
		spare	19
37	spare		
		spare	18
36	spare		
		spare	17
35	spare		
		spare	16
34	spare		
		remote	15
33	remote		
		remote	14
32	remote		
		remote	13
31	HEATER gnd		
		HEATER +	12
30	-15V FE gnd		
		-15V FE	11
29	+15V FE gnd		
		+15V FE	10
28	-15V ANA gnd		
		-15V ANA	9
27	+15V ANA gnd		
		+15V ANA	8
26	Digital gnd		
		Digital +	7
25	HEATER gnd		
		HEATER +	6
24	-15V FE gnd		
		-15V FE	5
23	+15V FE gnd		
		+15V FE	4
22	-15V ANA gnd		
		-15V ANA	3
21	+15V ANA gnd		
		+15V ANA	2
20	Digital gnd		
		Digital +	1

The backplane connector is
part # AMP 207463-1

The mating connector on the
module is part # AMP 745353-4

This connector information is the same for
both the ZIP and RTF modules

NOTES:

1. Revision 10/23/97 changed 48 pin contacts C13,C14,C15 and C16
2. Revised view of 50 Pin and 25 Pin connectors to show proper 0rientation on 4/7/99
3. 10 Layer Backplane
4. Revision 12/06/00 added the J5 connector information

Merle Haldeman
Revision by: Wayne Johnson

SYMBOL LEDGEND

AGND — ANALOG GROUND PLANE

FEGND — FRONT END GROUND PLANE

GND — DIGITAL GROUND PLANE

V15P V15PFE +10R +5REF +5QD +5Q VCC

CONNECTIONS TO POWER PLANES

V15N V15NFE -10R -5REF -5QD -5Q

INTRA PAGE CONNECTION

EXTERNAL PAGE CONNECTION OUTPUT

EXTERNAL PAGE CONNECTION INPUT

BACKPLANE CONNECTOR PIN

BLOCK — INPUT PIN — OUTPUT PIN

SYMBOL

PAGE CONNECTOR DESIGNATIONS:

ANALOG CONTROL INPUT — ANALOG CONTROL OUTPUT

ANALOG SIGNAL INPUT — ANALOG SIGNAL OUTPUT

3-3(2C)

SECTION PAGE COORDINATES

REVISIONS

REV	DESCRIPTION	DATE	APPROVED

	NAME	DATE
ORIGINATOR	MERLE HALDEMAN	12/21/98
DRAWN	BRUCE MERKEL	12/21/98
CHECKED	TOM CRENNA	12/21/98
APPROVED		

FERMILAB PPD/ETT/ES CDMS (E-891)
ZIP MODULE DRAWING
SYMBOL LEGEND

SIZE	FSCM NO.	DWG. NO.	REV
A			

SCALE | SHEET COVER PAGE

REVISIONS			
REV	DESCRIPTION	DATE	APPROVED
1	CHANGED P3 7 & 8 TO SPARE CHANGED P1 44 & 47 TO FEGND	11/13/00	B MERKEL

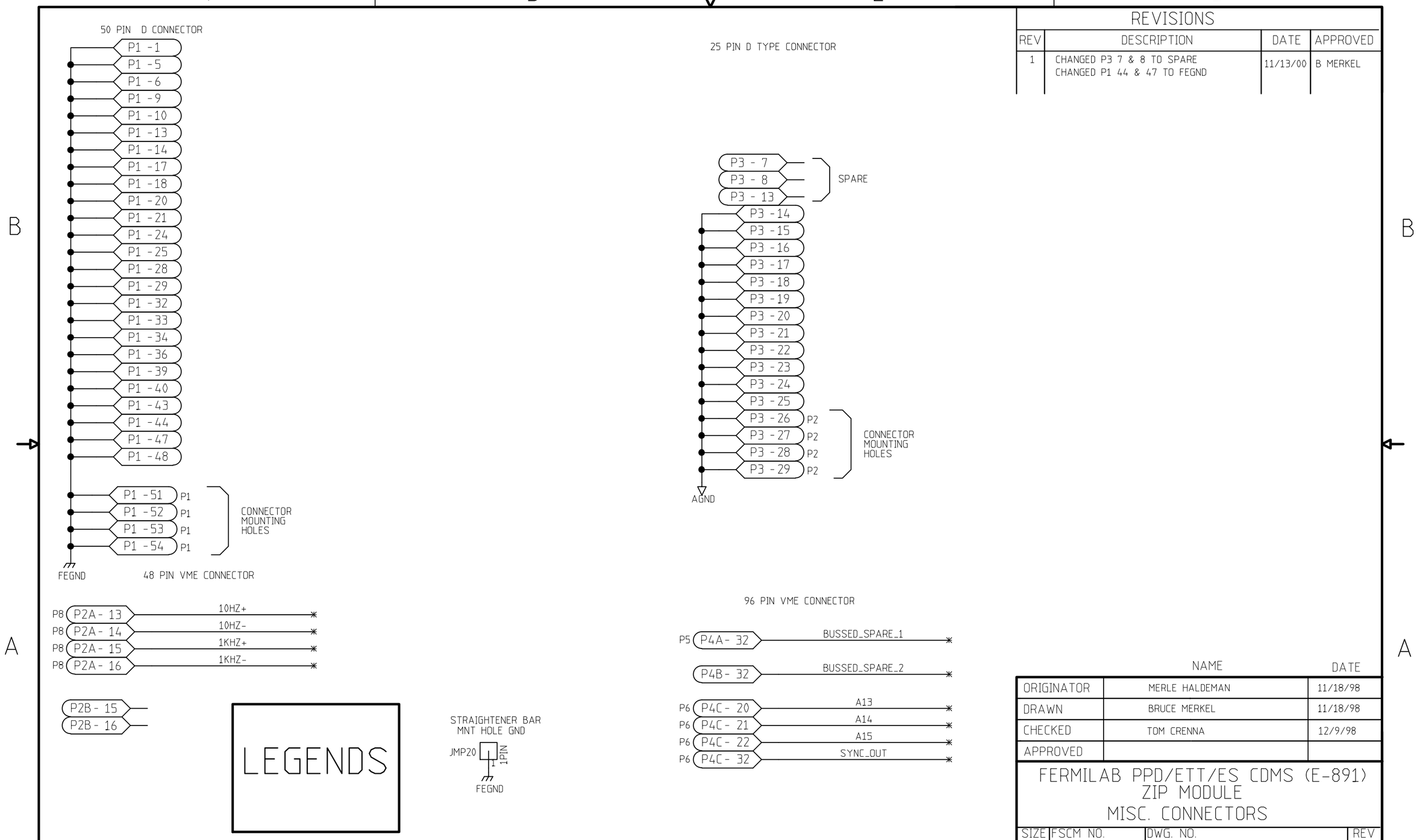

	NAME	DATE
ORIGINATOR	MERLE HALDEMAN	11/18/98
DRAWN	BRUCE MERKEL	11/18/98
CHECKED	TOM CRENNA	12/9/98
APPROVED		

FERMILAB PPD/ETT/ES CDMS (E-891)
ZIP MODULE
MISC. CONNECTORS

SIZE	FSCM NO.	DWG. NO.	REV
B			1
SCALE		SHEET 1-1	

REVISIONS			
REV	DESCRIPTION	DATE	APPROVED
0	NAME CHANGE TO MATCH BACKPLANE	7/27/99	BDM

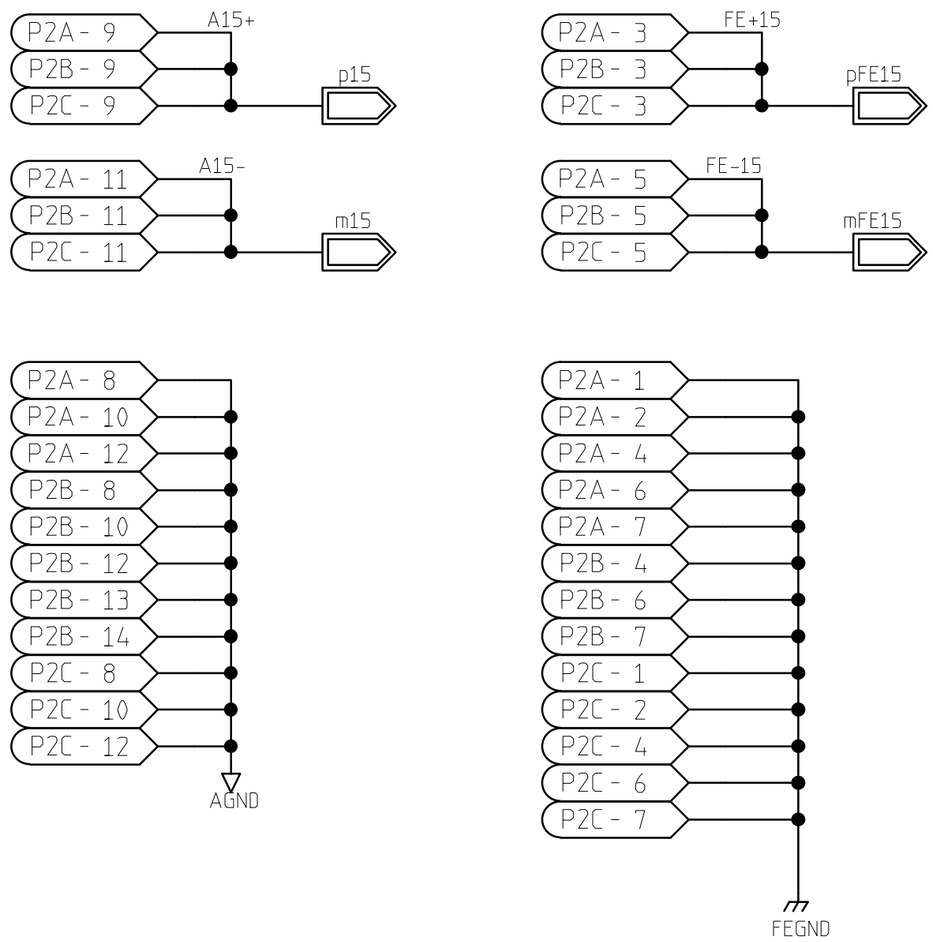

	NAME	DATE
ORIGINATOR	MERLE HALDEMAN	10/8/98
DRAWN	BRUCE MERKEL	10/8/98
CHECKED	TOM CRENNA	1/8/99
APPROVED		

FERMILAB PPD/ETT/ES CDMS (E-891)
ZIP MODULE
P2 BACKPLANE POWER CONNECTION

SIZE	FSCM NO.	DWG. NO.	REV
A			

SCALE		SHEET 1-2

P4
(96 PIN CONNECTOR)

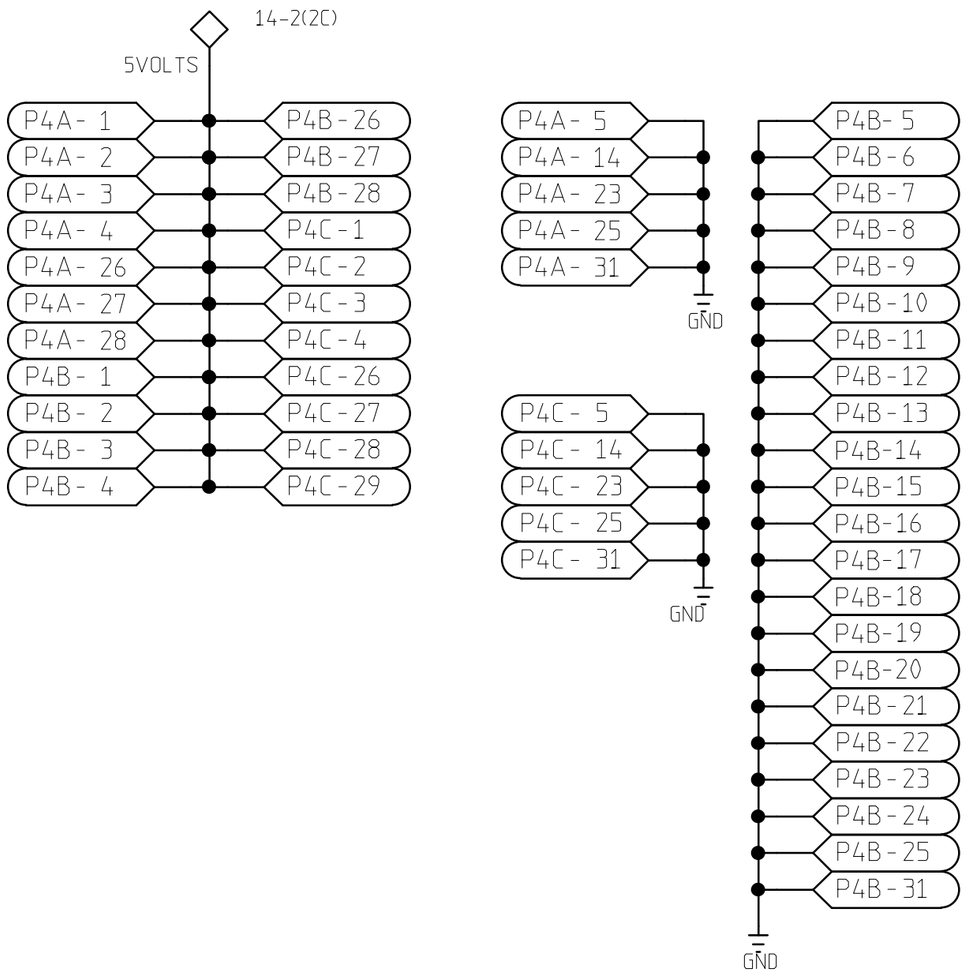

REVISIONS

REV	DESCRIPTION	DATE	APPROVED
0	NAME CHANGED TO MATCH BACKPLANE	7/27/99	BDM

	NAME	DATE
ORIGINATOR	MERLE HALDEMAN	10/8/98
DRAWN	BRUCE MERKEL	10/8/98
CHECKED	TOM CRENNA	1/8/99
APPROVED		

FERMILAB PPD/ETT/ES CDMS (E-891)
ZIP MODULE
P4 BACKPLANE POWER CONNECTION

SIZE	FSCM NO.	DWG. NO.	REV
A			

SCALE | SHEET 1-3

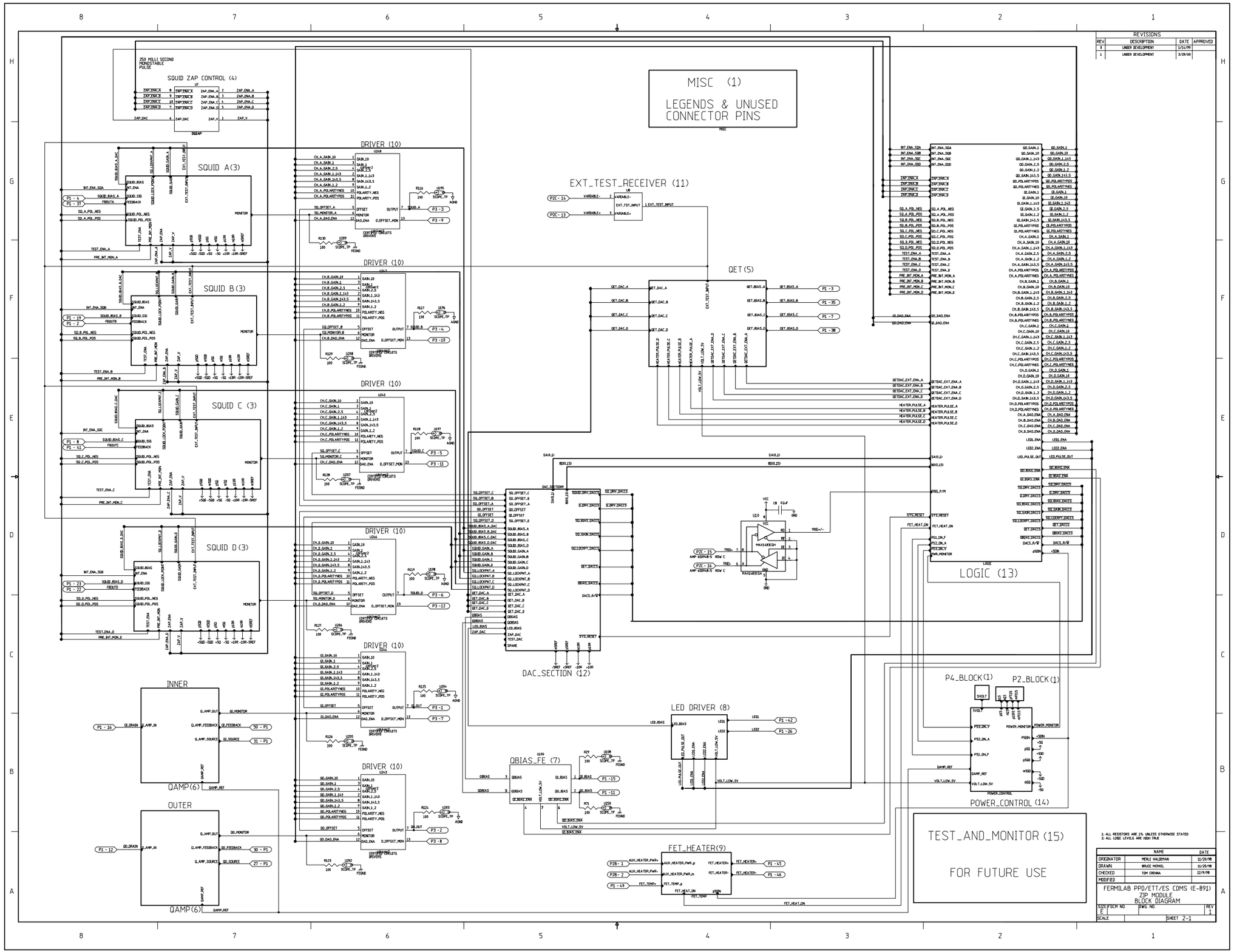

REVISIONS			
REV	DESCRIPTION	DATE	APPROVED
1	UNDER DEVELOPMENT	1/21/99	
1	UNDER DEVELOPMENT	3/26/99	

1: ALL RESISTORS ARE 1% UNLESS OTHERWISE STATED
2: ALL LOGIC LEVELS ARE HIGH TRUE

	NAME	DATE
ORIGINATOR	MERLE HALDEMAN	11/20/98
DRAWN	BRUCE MERKEL	11/20/98
CHECKED	TOM CHENNA	12/9/98
MODIFIED		

FERMILAB PPD/ETT/ES CDMS (E-891)
ZIP MODULE
BLOCK DIAGRAM

SIZE	FSCM NO.	DWG. NO.	REV
E			1
SCALE		SHEET 2-1	

REVISIONS			
REV	DESCRIPTION	DATE	APPROVED

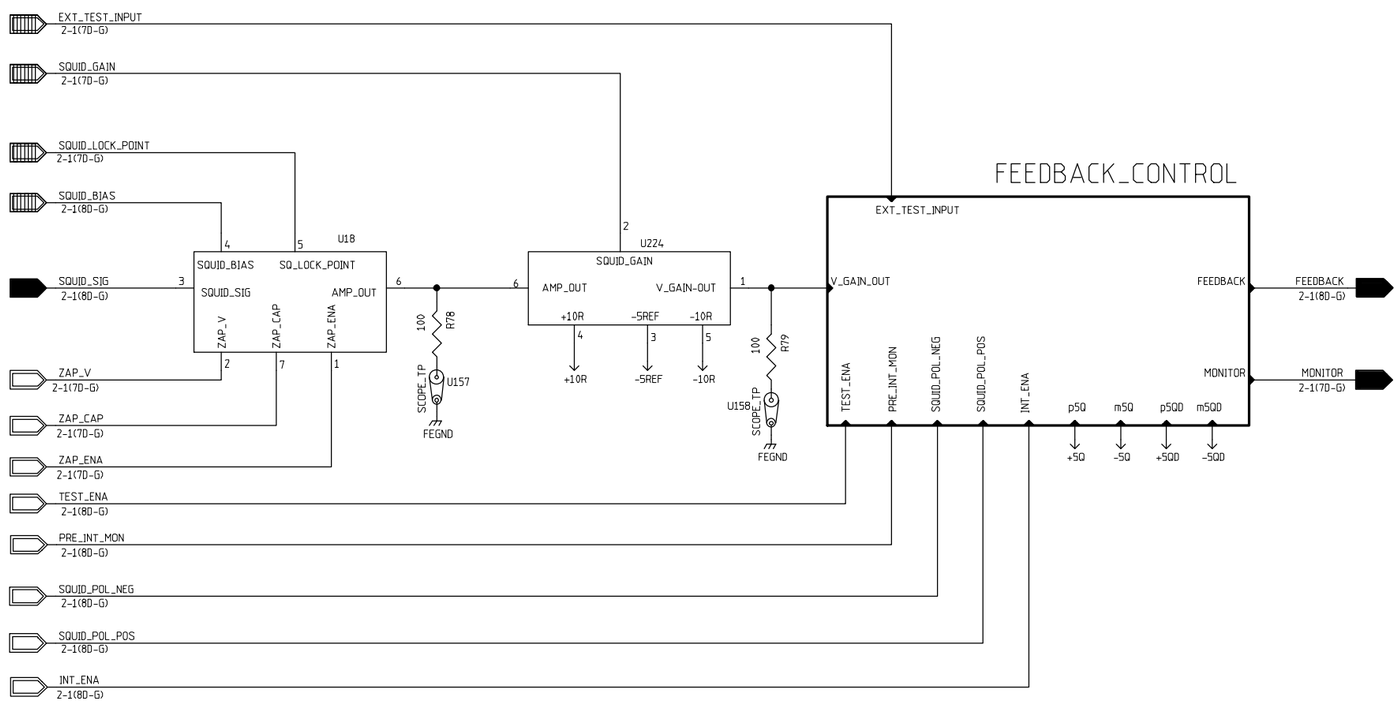

SQUID FRONT END

SQUID VARIABLE GAIN AMPLIFIER

SQUID FEEDBACK CONTROL

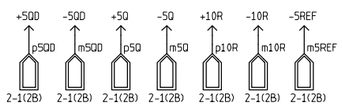

	NAME	DATE
ORIGINATOR	MERLE HALDEMAN	11/17/98
DRAWN	BRUCE MERKEL	11/17/98
CHECKED	TOM CRENNA	1/6/99
APPROVED		

FERMILAB PPD/ETT/ES CDMS (E-891)
ZIP MODULE
SQUID BLOCK DIAGRAM

SIZE	FSCM NO.	DWG. NO.	REV
C			1
SCALE		SHEET 3-1	

REVISIONS			
REV	DESCRIPTION	DATE	APPROVED

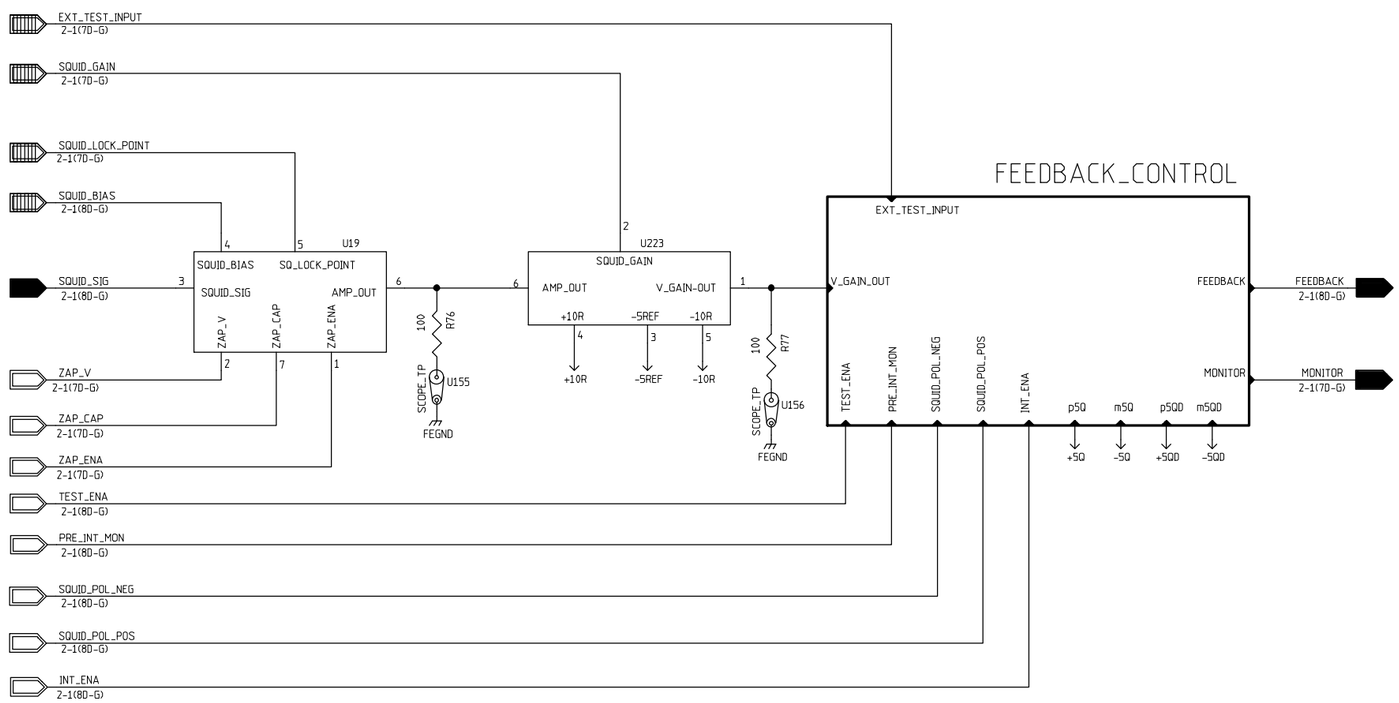

SQUID FRONT END

SQUID VARIABLE GAIN AMPLIFIER

SQUID FEEDBACK CONTROL

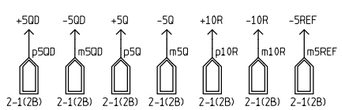

	NAME	DATE
ORIGINATOR	MERLE HALDEMAN	11/17/98
DRAWN	BRUCE MERKEL	11/17/98
CHECKED	TOM CRENNA	1/6/99
APPROVED		

FERMILAB PPD/ETT/ES CDMS (E-891)
ZIP MODULE
SQUID BLOCK DIAGRAM

SIZE	FSCM NO.	DWG. NO.	REV
C			1
SCALE		SHEET 3-1	

REVISIONS			
REV	DESCRIPTION	DATE	APPROVED

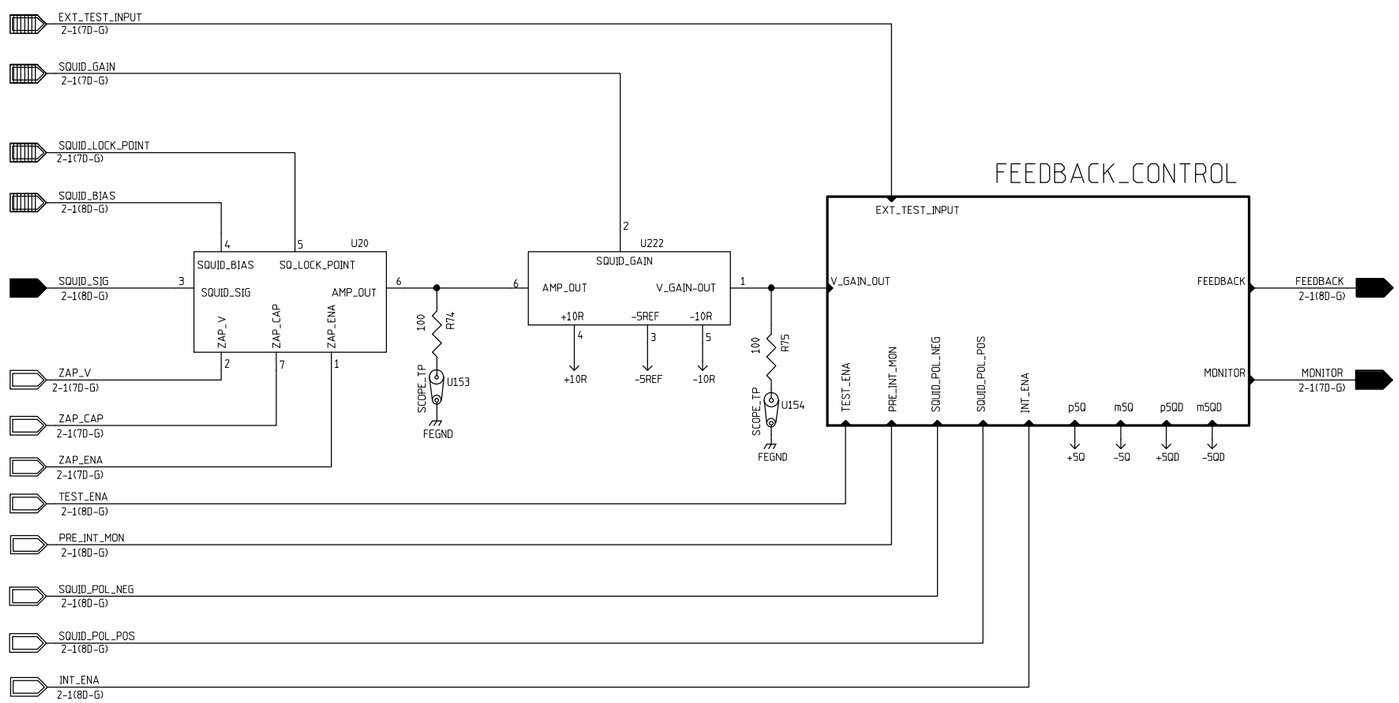

SQUID FRONT END

SQUID VARIABLE GAIN AMPLIFIER

SQUID FEEDBACK CONTROL

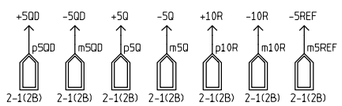

	NAME	DATE
ORIGINATOR	MERLE HALDEMAN	11/17/98
DRAWN	BRUCE MERKEL	11/17/98
CHECKED	TOM CRENNA	1/6/99
APPROVED		

FERMILAB PPD/ETT/ES CDMS (E-891)
ZIP MODULE
SQUID BLOCK DIAGRAM

SIZE	FSCM NO.	DWG. NO.	REV
C			1
SCALE		SHEET 3-1	

REVISIONS			
REV	DESCRIPTION	DATE	APPROVED

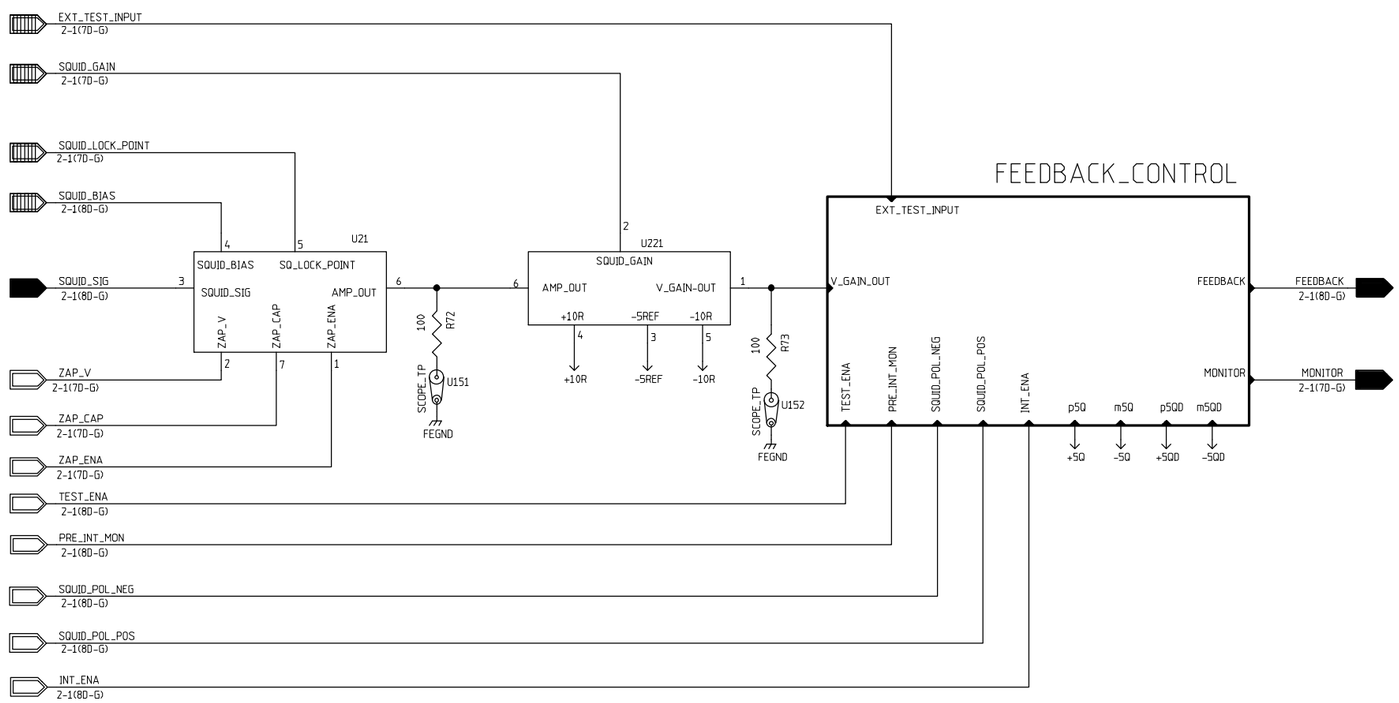

SQUID FRONT END

SQUID VARIABLE GAIN AMPLIFIER

SQUID FEEDBACK CONTROL

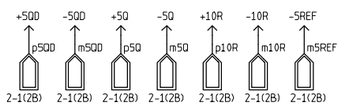

	NAME	DATE
ORIGINATOR	MERLE HALDEMAN	11/17/98
DRAWN	BRUCE MERKEL	11/17/98
CHECKED	TOM CRENNA	1/6/99
APPROVED		

FERMILAB PPD/ETT/ES CDMS (E-891)
ZIP MODULE
SQUID BLOCK DIAGRAM

SIZE	FSCM NO.	DWG. NO.	REV
C			1
SCALE		SHEET 3-1	

REVISIONS			
REV	DESCRIPTION	DATE	APPROVED

RELAY SHOWN IN
DEENERGIZED STATE

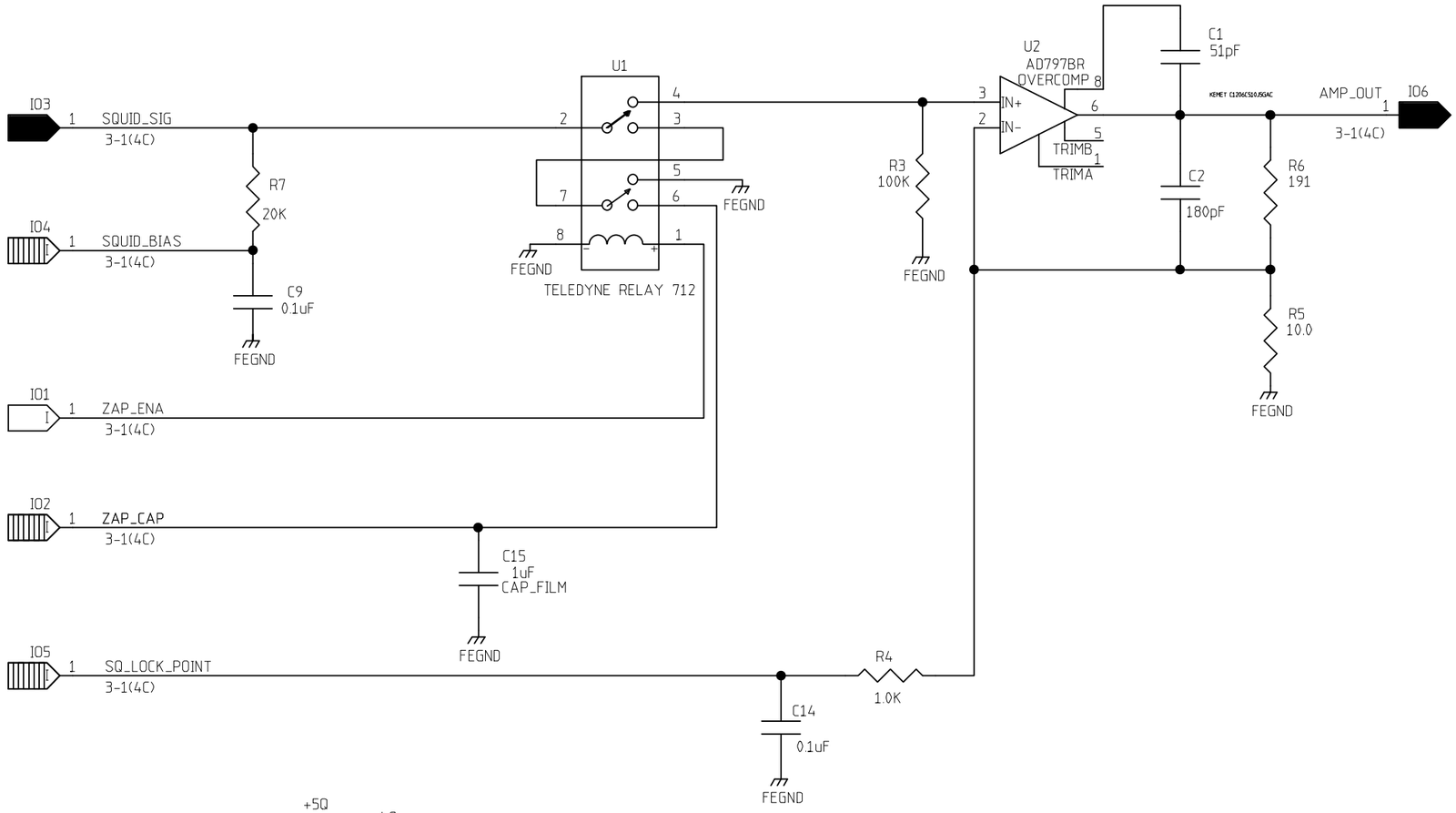

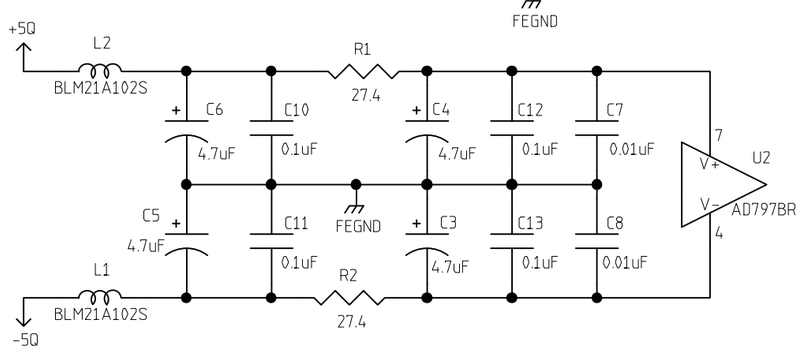

	NAME	DATE
ORIGINATOR	MERLE HALDEMAN	11/11/98
DRAWN	BRUCE MERKEL	11/11/98
CHECKED	TOM CRENNA	1/6/99
APPROVED		

FERMILAB PPD/ETT/ES CDMS (E-891)
ZIP MODULE
SQUID FRONT END

SIZE	FSCM NO.	DWG. NO.	REV
B			
SCALE		SHEET 3-2	

REVISIONS			
REV	DESCRIPTION	DATE	APPROVED
1	MODIFIED TO REMOVE OSCILLATIONS	5/19/99	BOM

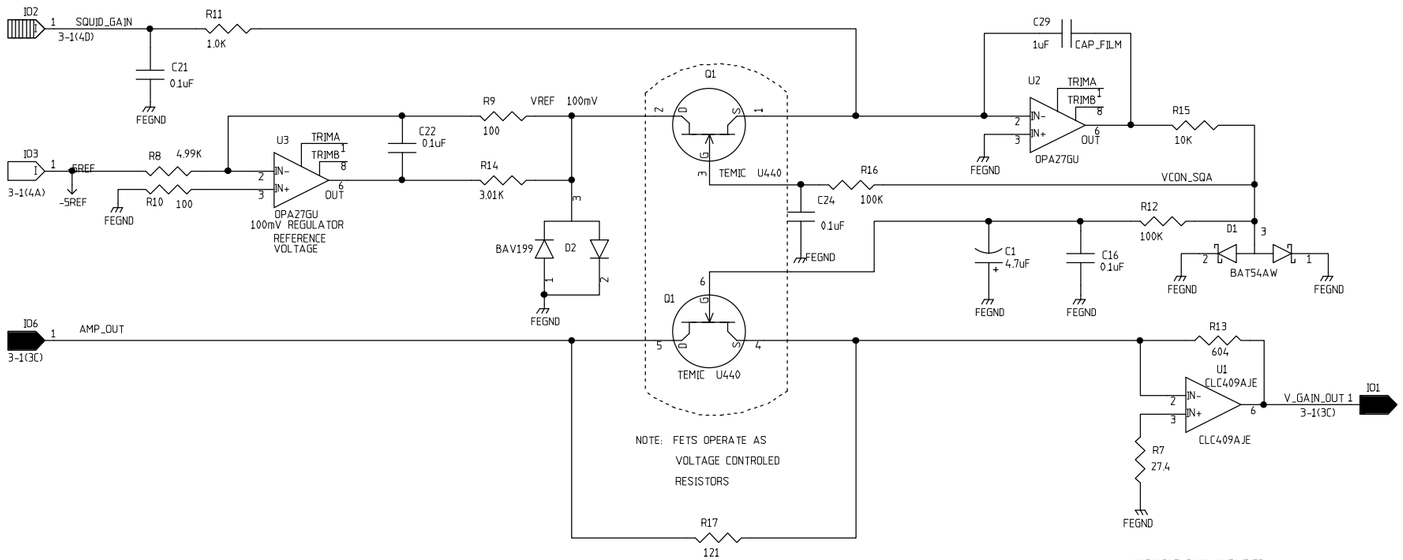

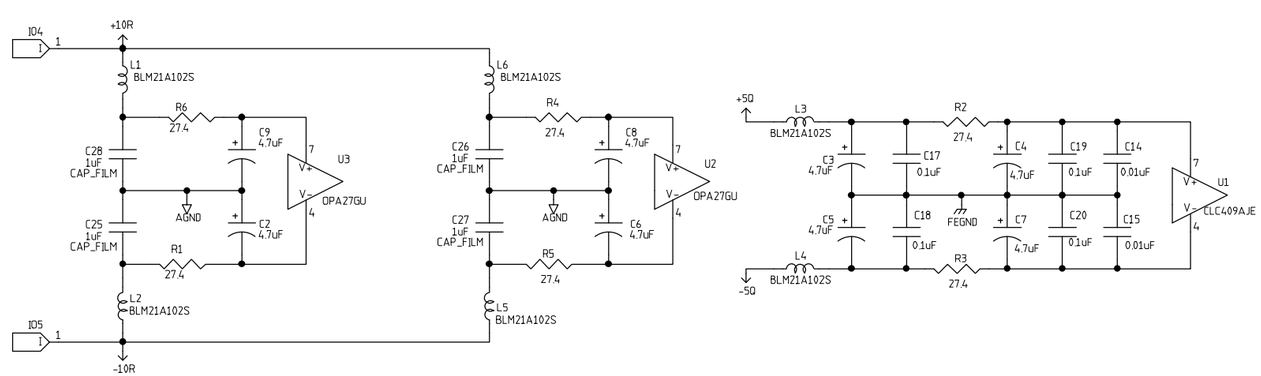

	NAME	DATE
ORIGINATOR	MERLE HALDEMAN	11/13/98
DRAWN	BRUCE MERKEL	11/13/98
CHECKED	TOM CRENNA	1/6/99
APPROVED		

FERMILAB PPD/ETT/ES CDMS (E-891)
ZIP MODULE
SQUID VARIABLE GAIN AMP

SIZE	FSCM NO.	DWG. NO.	REV
C			1
SCALE		SHEET 3-3	

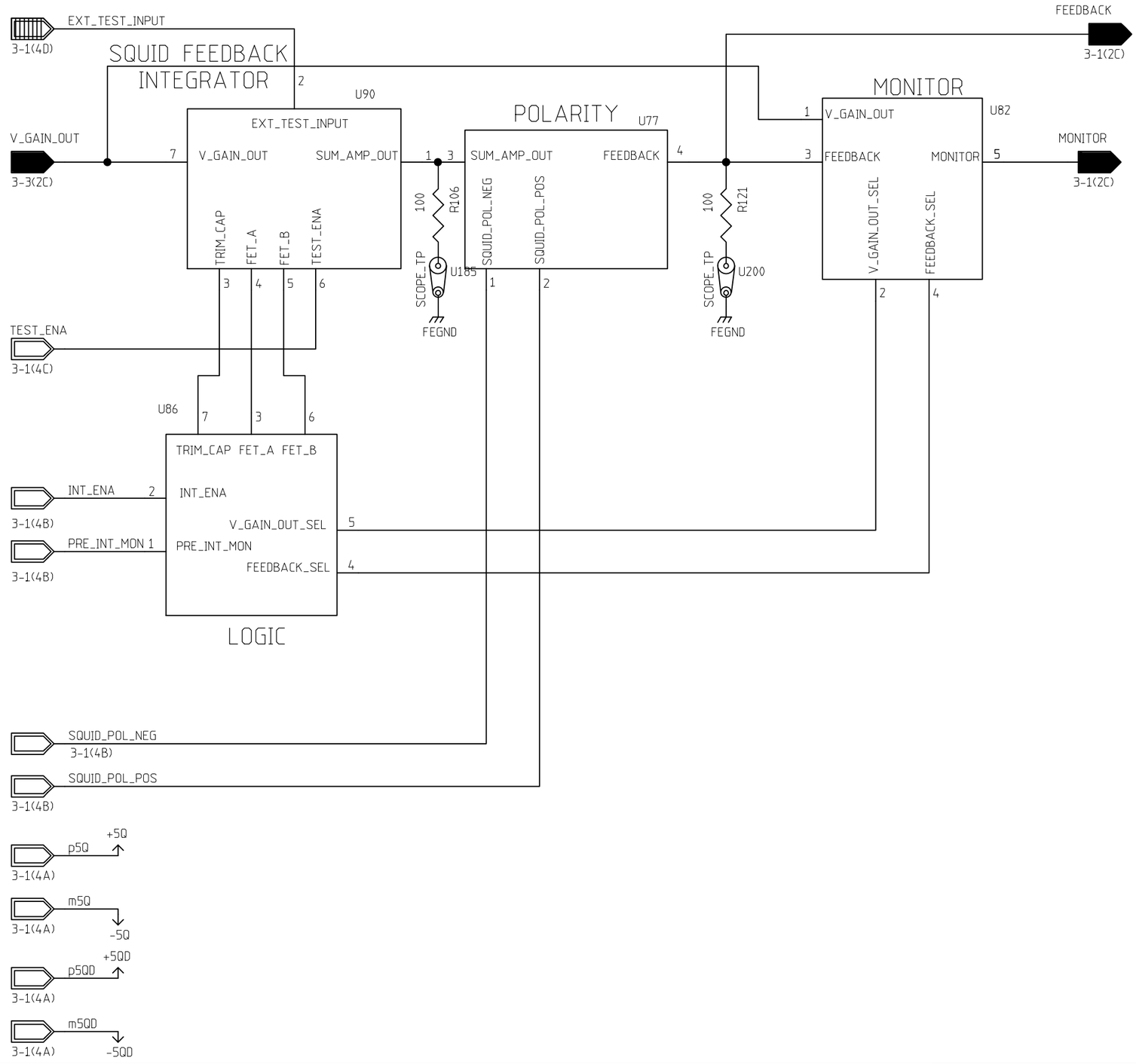

REVISIONS			
REV	DESCRIPTION	DATE	APPROVED

	NAME	DATE
ORIGINATOR	MERLE HALDEMAN	11/13/98
DRAWN	BRUCE MERKEL	11/13/98
CHECKED	TOM CRENNA	1/6/99
APPROVED		

FERMILAB PPD/ETT/ES CDMS (E-891)
ZIP MODULE
SQUID FEEDBACK CONTROL

SIZE	FSCM NO.	DWG. NO.	REV
B			1
SCALE		SHEET 3-4	

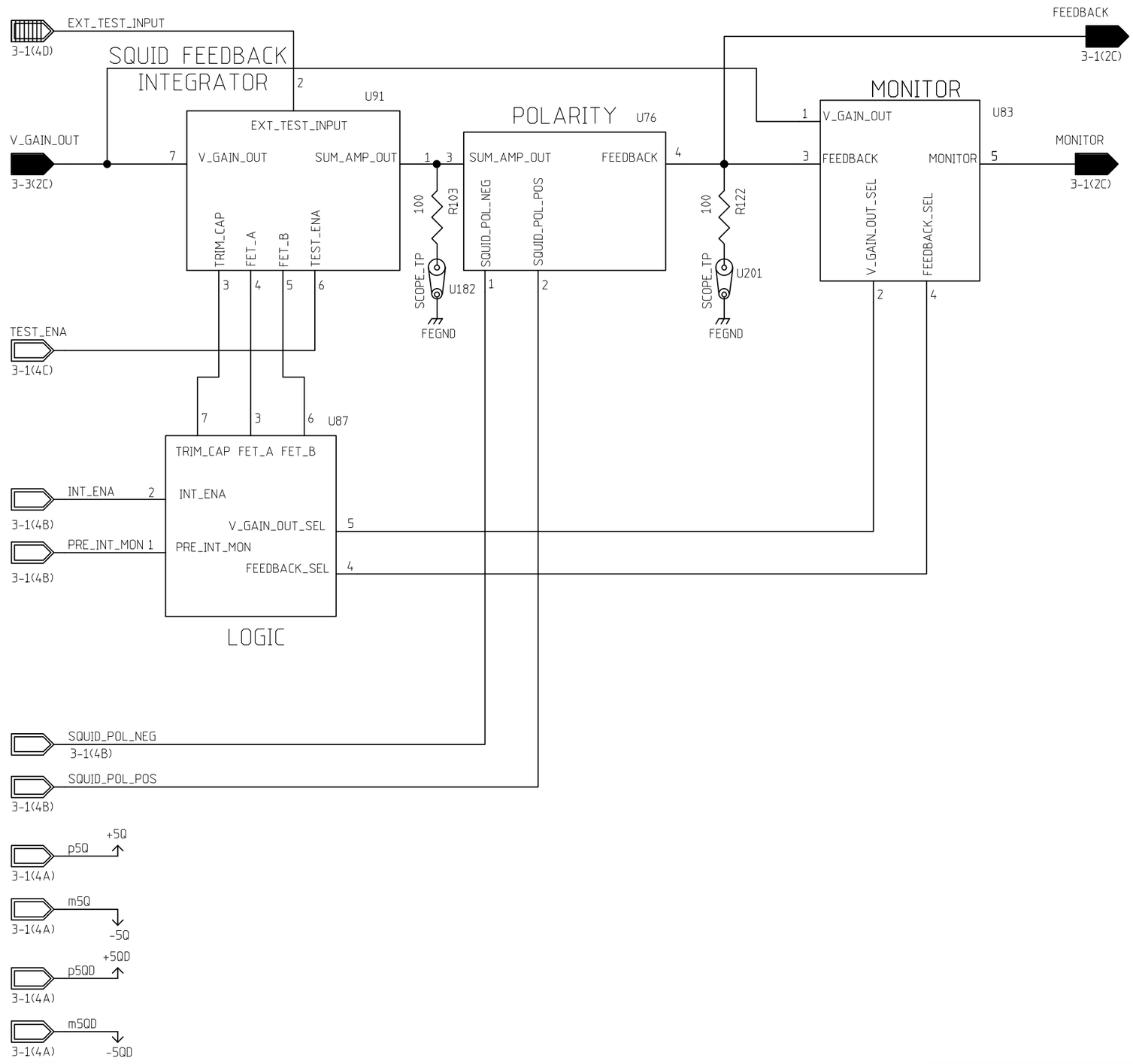

REVISIONS			
REV	DESCRIPTION	DATE	APPROVED

	NAME	DATE
ORIGINATOR	MERLE HALDEMAN	11/13/98
DRAWN	BRUCE MERKEL	11/13/98
CHECKED	TOM CRENNA	1/6/99
APPROVED		

FERMILAB PPD/ETT/ES CDMS (E-891)
ZIP MODULE
SQUID FEEDBACK CONTROL

SIZE	FSCM NO.	DWG. NO.	REV
B			1
SCALE		SHEET 3-4	

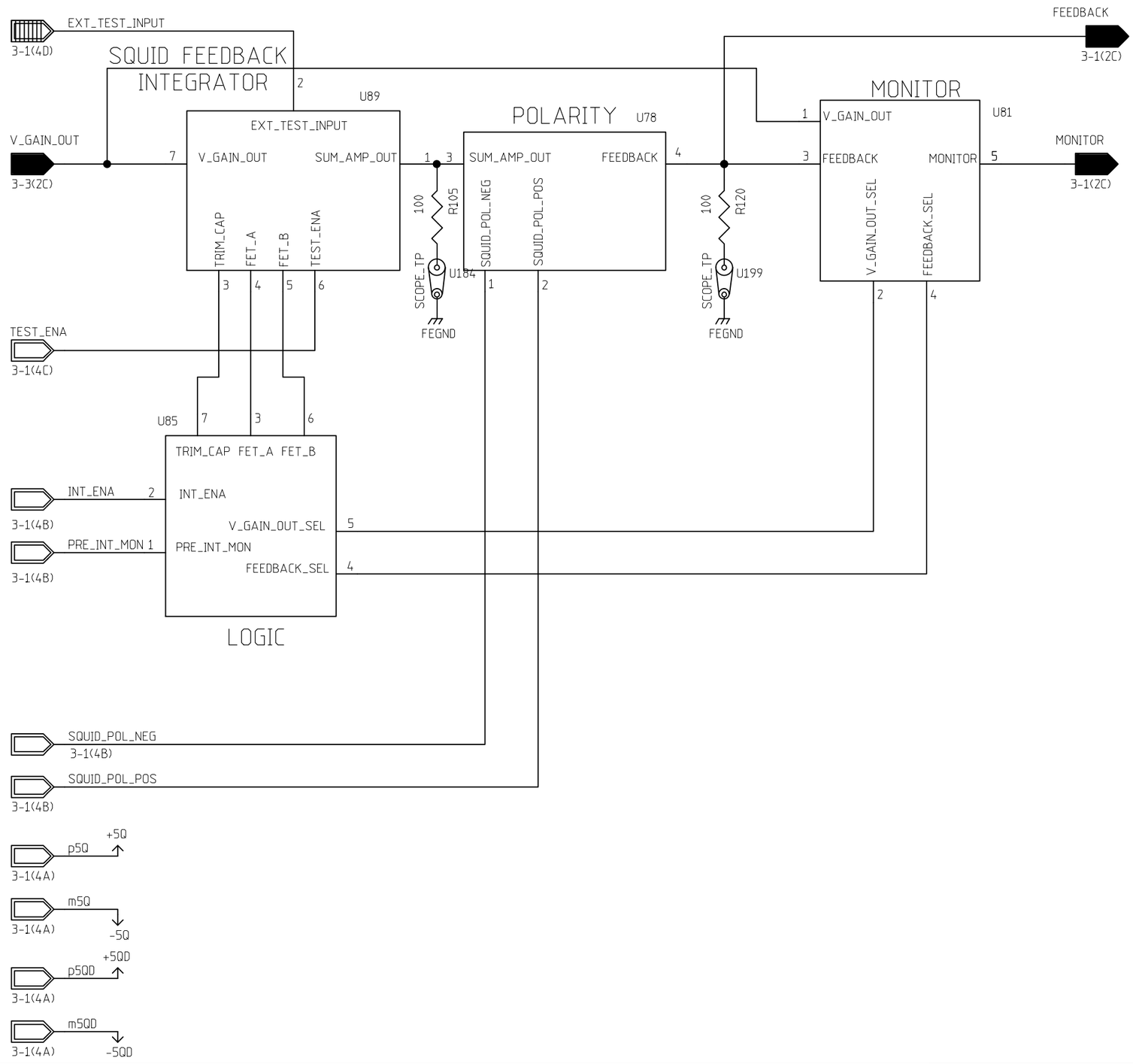

REVISIONS			
REV	DESCRIPTION	DATE	APPROVED

	NAME	DATE
ORIGINATOR	MERLE HALDEMAN	11/13/98
DRAWN	BRUCE MERKEL	11/13/98
CHECKED	TOM CRENNA	1/6/99
APPROVED		

FERMILAB PPD/ETT/ES CDMS (E-891)
ZIP MODULE
SQUID FEEDBACK CONTROL

SIZE	FSCM NO.	DWG. NO.	REV
B			1
SCALE		SHEET 3-4	

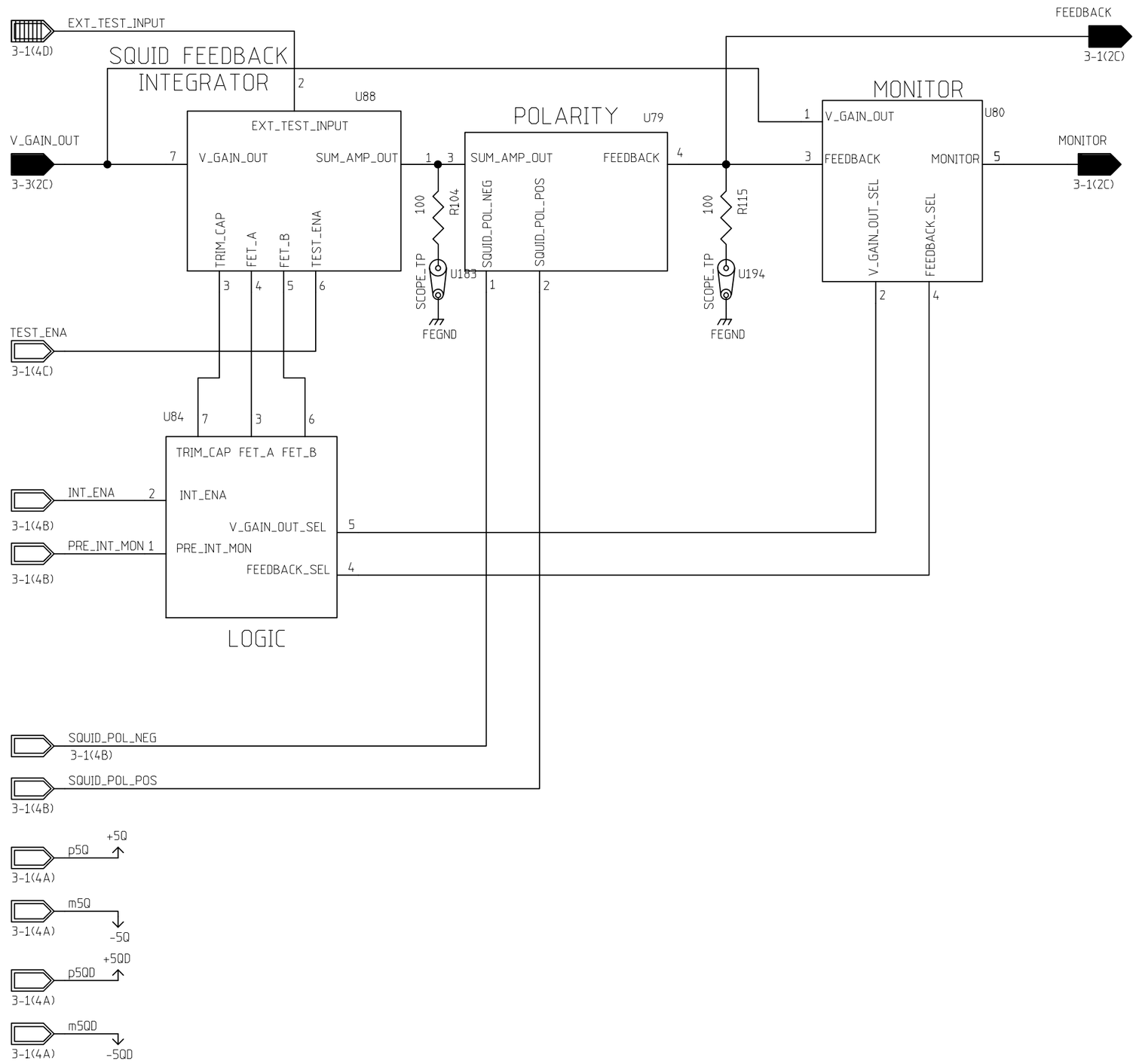

REVISIONS			
REV	DESCRIPTION	DATE	APPROVED

	NAME	DATE
ORIGINATOR	MERLE HALDEMAN	11/13/98
DRAWN	BRUCE MERKEL	11/13/98
CHECKED	TOM CRENNA	1/6/99
APPROVED		

FERMILAB PPD/ETT/ES CDMS (E-891)
ZIP MODULE
SQUID FEEDBACK CONTROL

SIZE	FSCM NO.	DWG. NO.	REV
B			1
SCALE		SHEET 3-4	

REVISIONS			
REV	DESCRIPTION	DATE	APPROVED
1	UPDATED FOR VERSION 1	9/17/99	

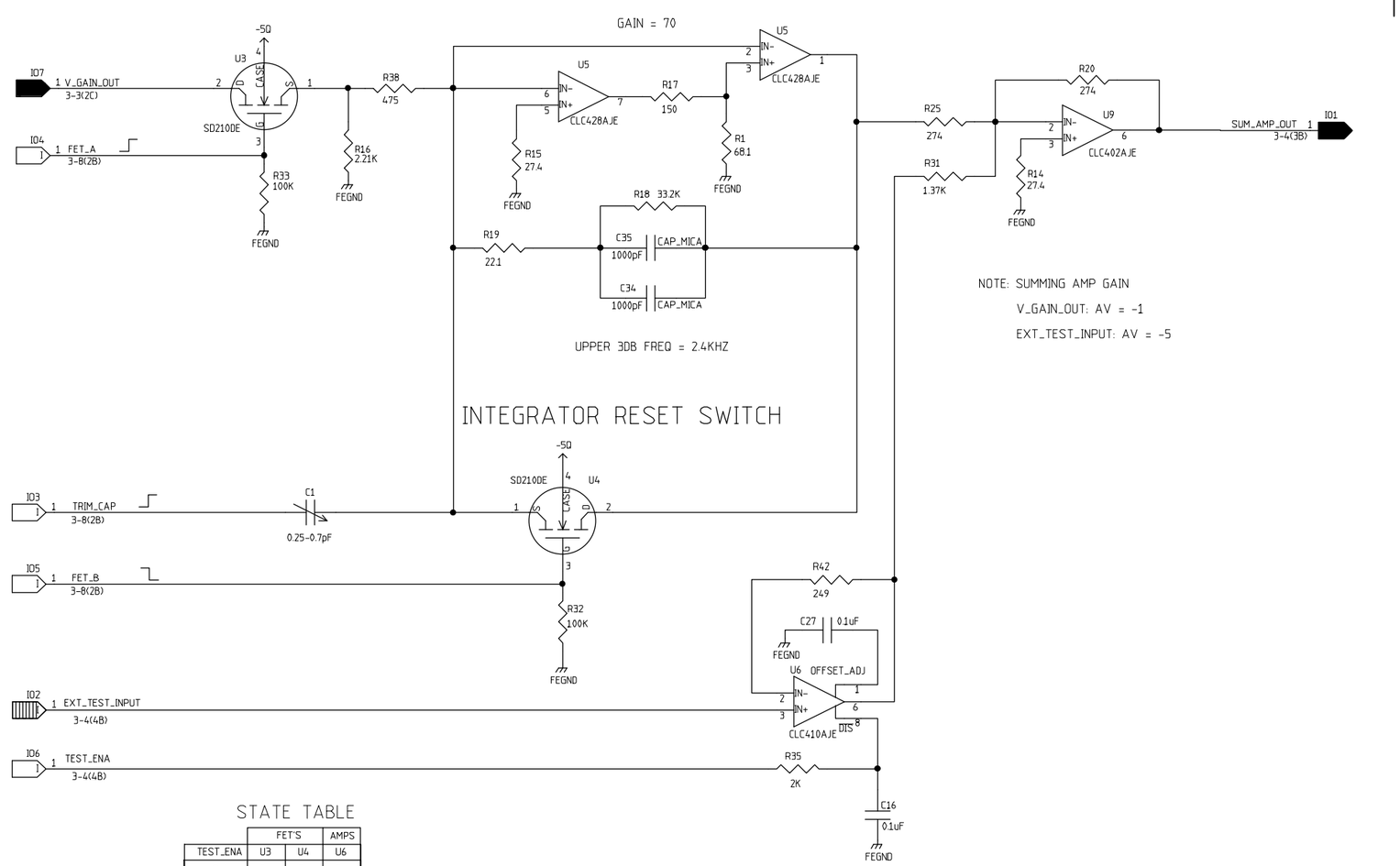

STATE TABLE

	FET'S		AMPS
TEST_ENA	U3	U4	U6
LOW	O	C	E
HI	C	O	D

O = OPEN C = CLOSED
E = ENABLE D = DISABLE

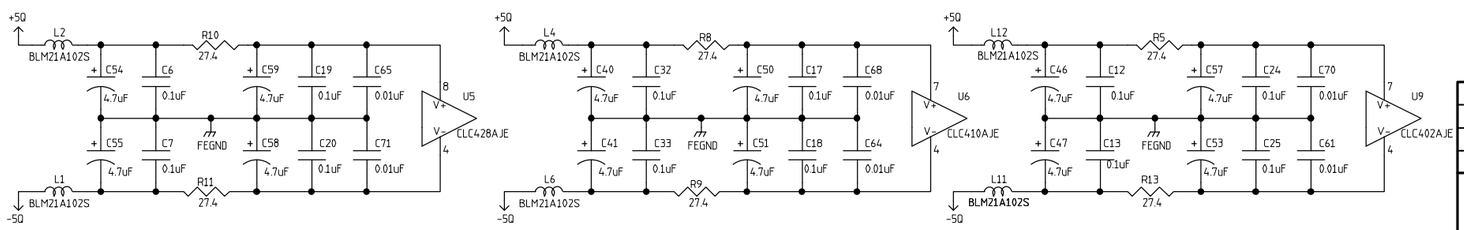

	NAME	DATE
ORIGINATOR	MERLE HALDEMAN	11/13/98
DRAWN	BRUCE MERKEL	11/13/98
CHECKED	TOM CRENNA	1/6/99
APPROVED		

FERMILAB PPD/ETT/ES CDMS (E-891)
ZIP MODULE
SQUID FEEDBACK INTEGRATOR

SIZE	FSCM NO.	DWG. NO.	REV
C			1
SCALE		SHEET 3-5	

REVISIONS			
REV	DESCRIPTION	DATE	APPROVED

POLARITY SELECTION

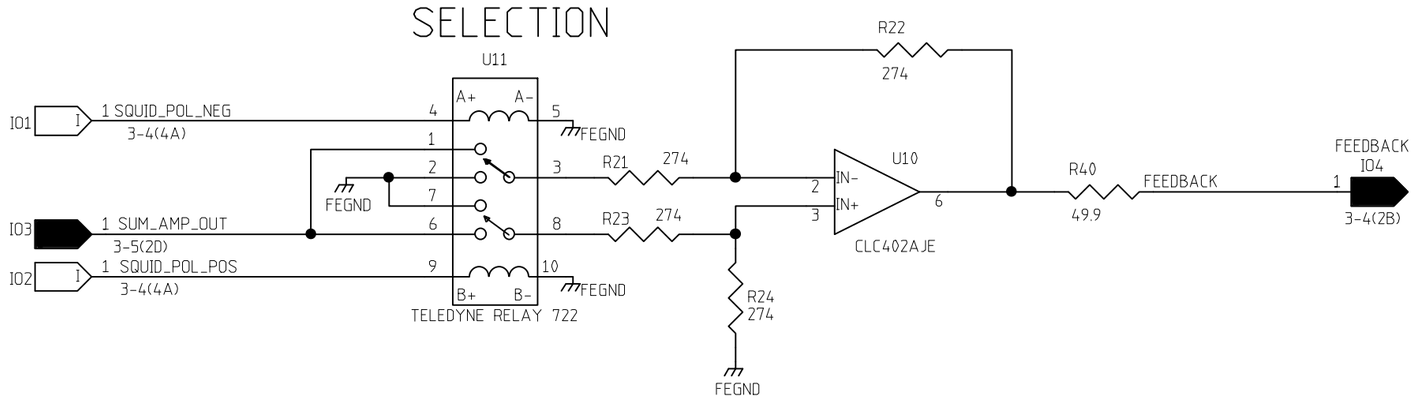

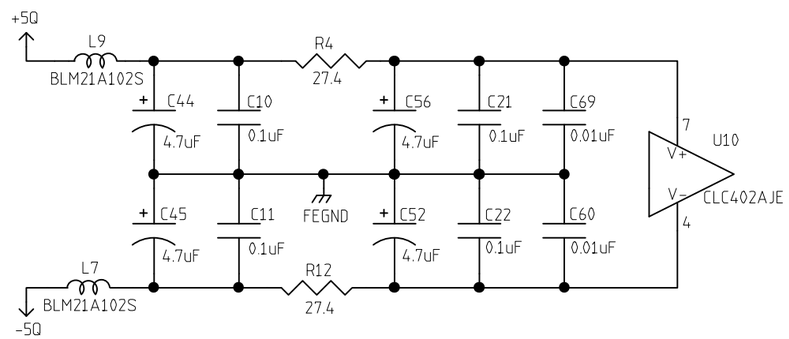

	NAME	DATE
ORIGINATOR	MERLE HALDEMAN	11/13/98
DRAWN	BRUCE MERKEL	11/13/98
CHECKED	TOM CRENNA	1/6/99
APPROVED		

FERMILAB PPD/ETT/ES CDMS (E-891)
ZIP MODULE
SQUID FEEDBACK POLARITY

SIZE	FSCM NO.	DWG. NO.	REV
B			

SCALE | SHEET 3-6

REVISIONS			
REV	DESCRIPTION	DATE	APPROVED
2	REPLACED OP AMPS WITH ANALOG SWITCH	12/08/2K	

MONITOR SELECTION SWITCHES

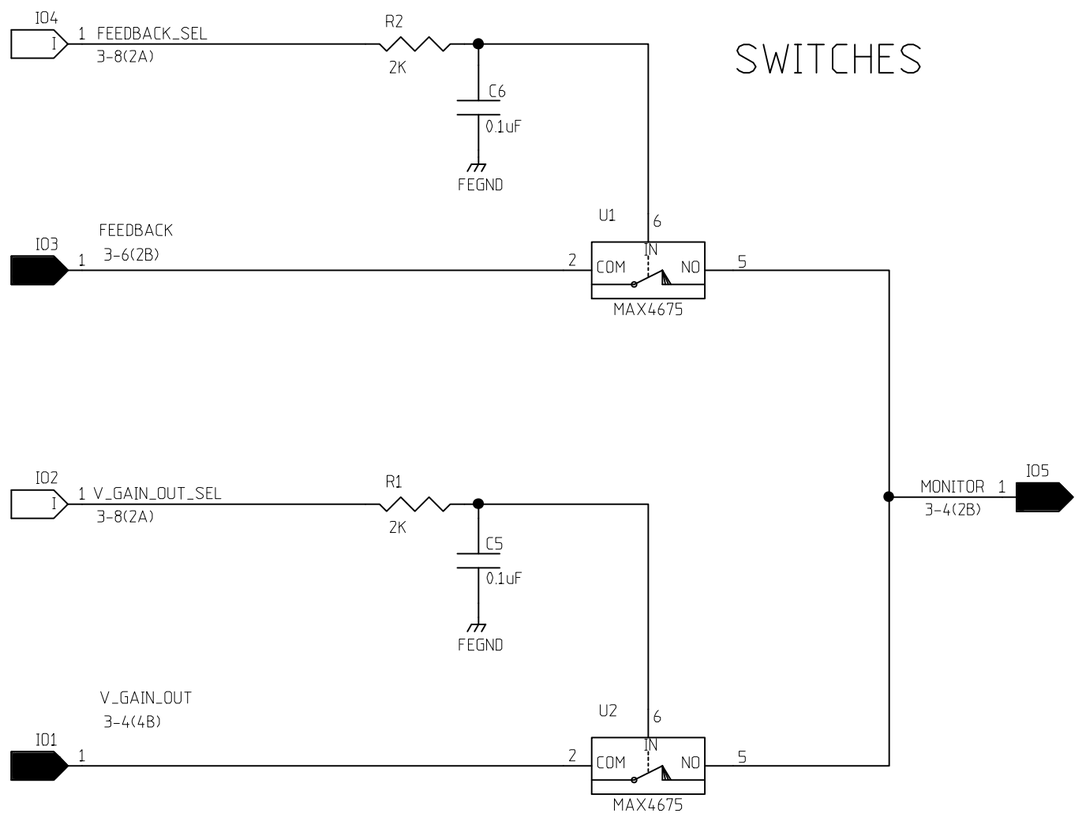

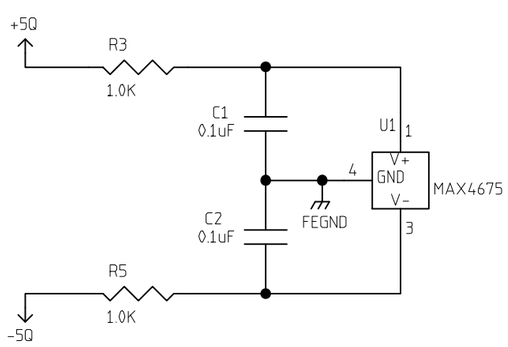

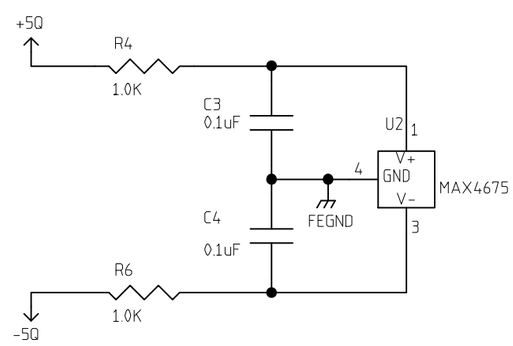

MAX4675	
IN	SWITCH
0	OFF
1	ON

	NAME	DATE
ORIGINATOR	MERLE HALDEMAN	11/13/98
DRAWN	BRUCE MERKEL	11/13/98
CHECKED	TOM CRENNA	1/6/99
APPROVED		

FERMILAB PPD/ETT/ES CDMS (E-891)
ZIP MODULE
SQUID FEEDBACK MONITOR

SIZE	FSCM NO.	DWG. NO.	REV
B			2
SCALE		SHEET 3-7	

REVISIONS			
REV	DESCRIPTION	DATE	APPROVED

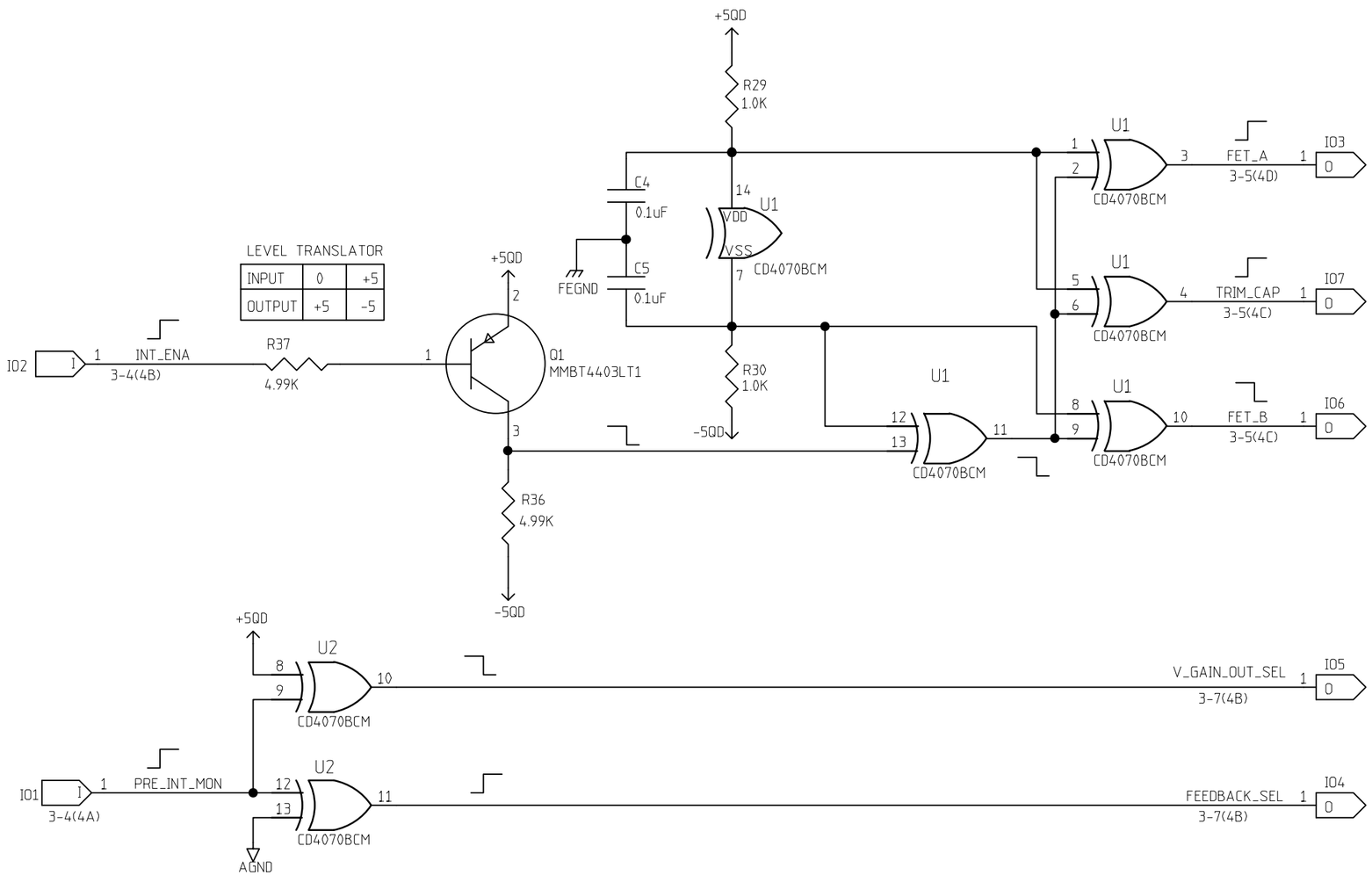

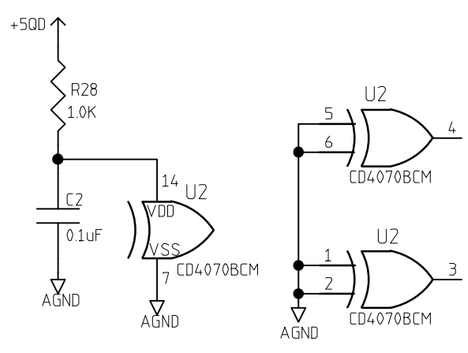

NOTE: U1 POWER SHOWN ABOVE

	NAME	DATE
ORIGINATOR	MERLE HALDEMAN	11/16/98
DRAWN	BRUCE MERKEL	11/16/98
CHECKED	TOM CRENNA	1/6/99
APPROVED		

FERMILAB PPD/ETT/ES CDMS (E-891)
ZIP MODULE
SQUID FEEDBACK LOGIC

SIZE	FSCM NO.	DWG. NO.	REV
B			1
SCALE		SHEET 3-8	

REVISIONS			
REV	DESCRIPTION	DATE	APPROVED

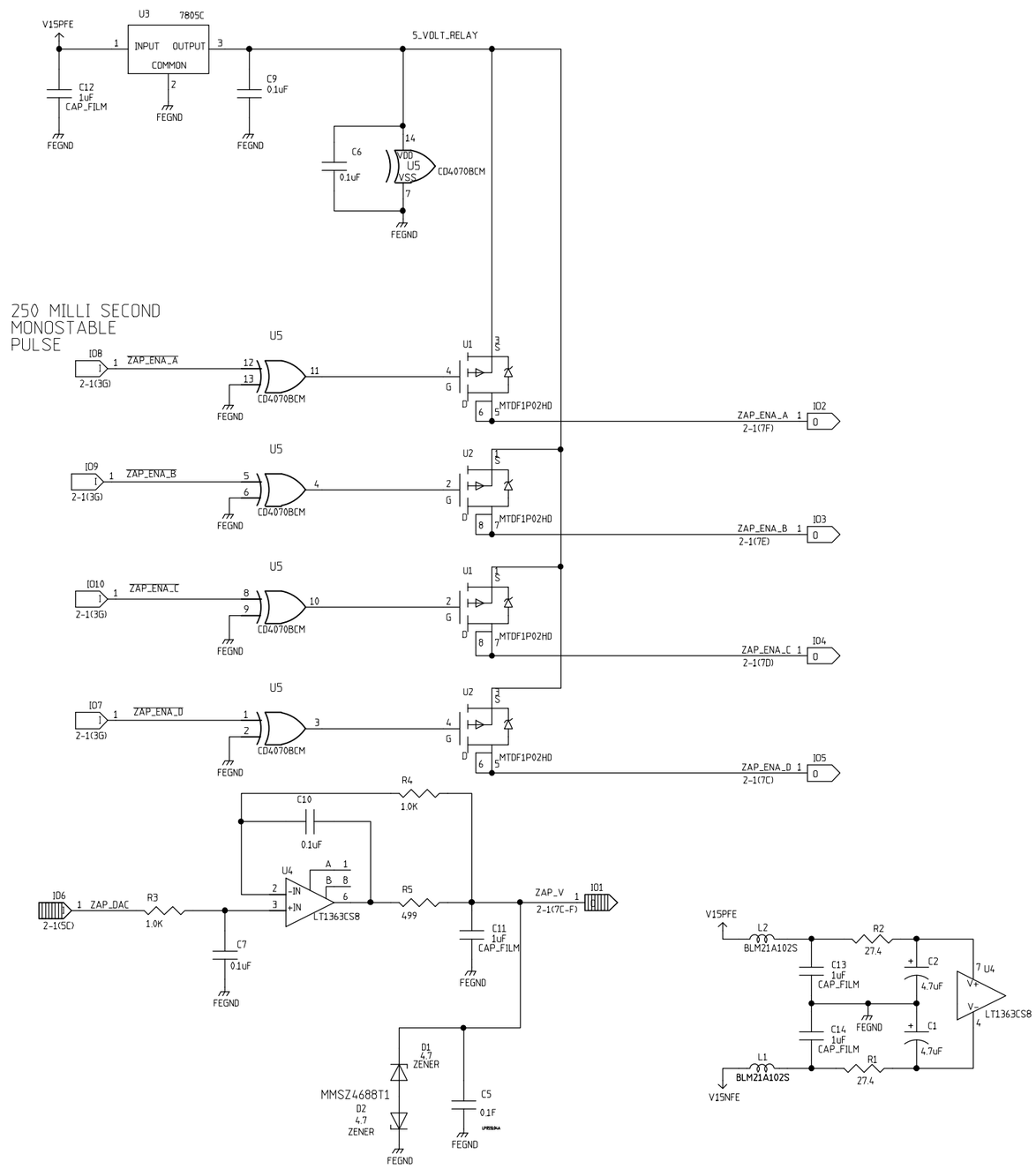

REVISED 9/21/99 BRUCE MERKEL

	NAME	DATE
ORIGINATOR	MERLE HALDEMAN	11/17/98
DRAWN	BRUCE MERKEL	11/17/98
CHECKED	TOM CRENNA	1/6/99
APPROVED		

FERMILAB PPD/ETT/ES CDMS (E-891)
ZIP MODULE
SQUID ZAP CONTROL

SIZE	FSCM NO.	DWG. NO.	REV
C			1
SCALE		SHEET 4-1	

REVISIONS			
REV	DESCRIPTION	DATE	APPROVED
0	UNDER DEVELOPMENT	1-20-99	

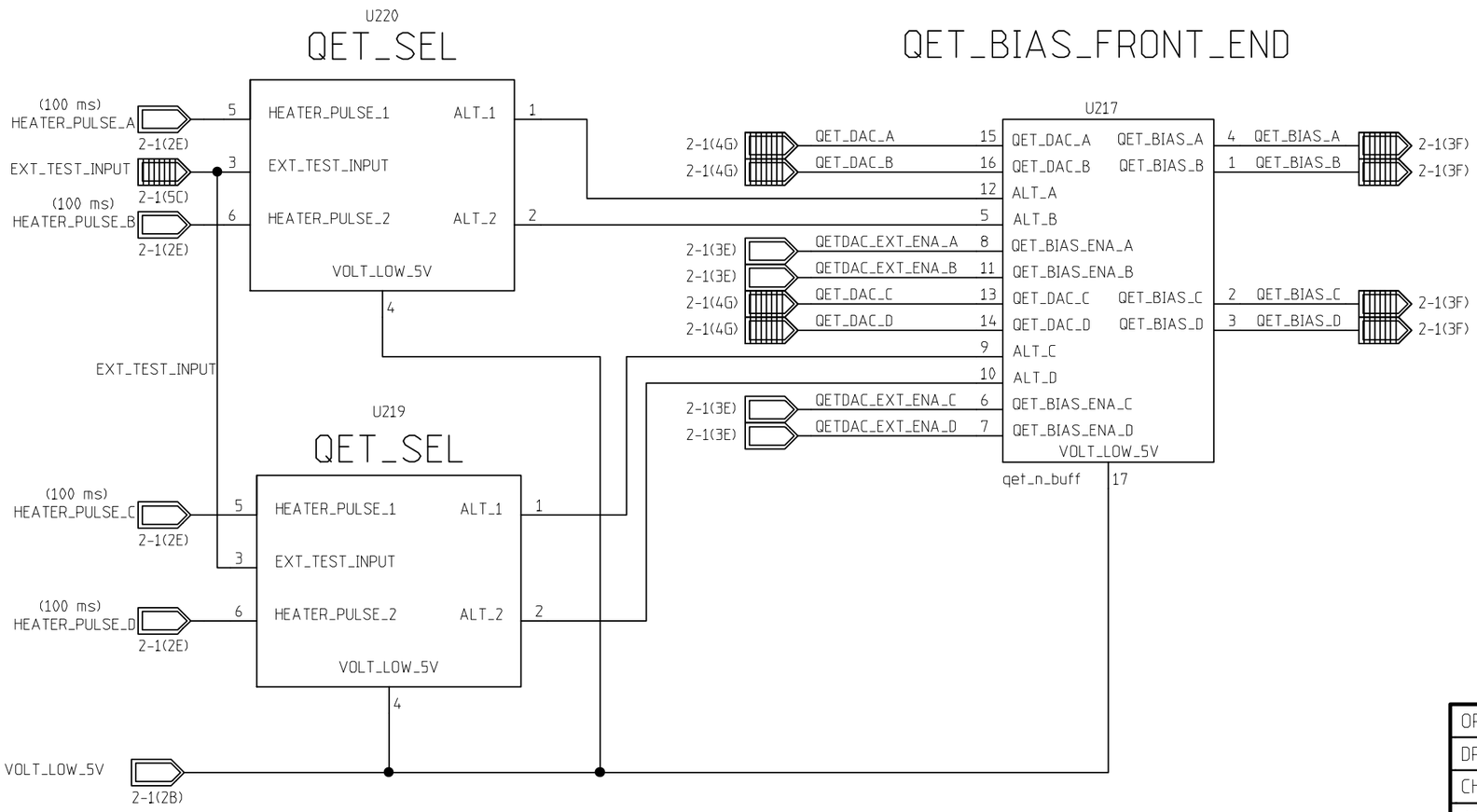

	NAME	DATE
ORIGINATOR	MERLE HALDEMAN	11/16/98
DRAWN	BRUCE MERKEL	11/16/98
CHECKED	TOM CRENNA	1/6/99
APPROVED		

FERMILAB PPD/ETT/ES CDMS (E-891)
ZIP MODULE
QET BLOCK DIAGRAM

SIZE	FSCM NO.	DWG. NO.	REV
B			1
SCALE		SHEET 5-1	

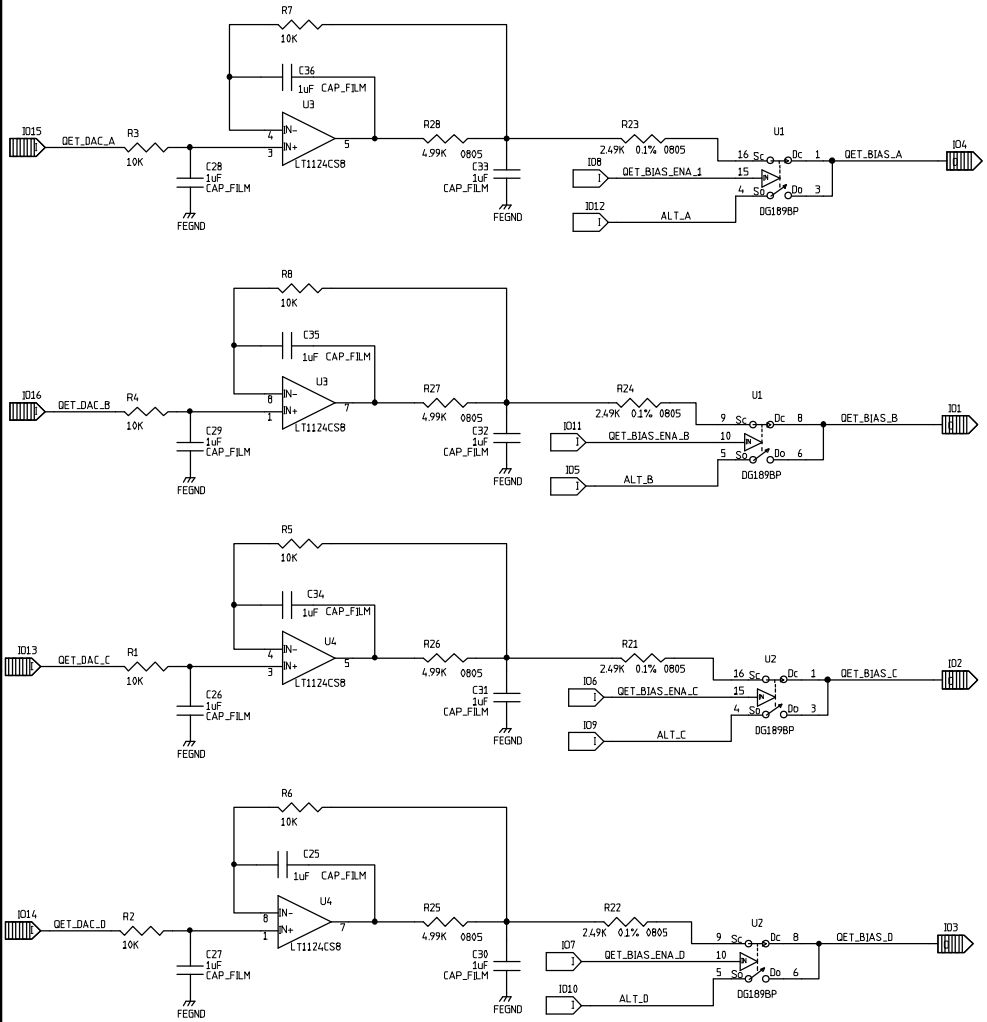

REVISIONS			
REV	DESCRIPTION	DATE	APPROVED
1	REPLACED 1uF CAPS WITH BACK TO BACK 4.7uF TANT. CAPS	2 29 00	BDM
2	REPLACED RESISTORS R21-R24 WITH 2.49K	3/28/01	BDM

	NAME	DATE
ORIGINATOR	MERLE HALDEMAN	06/17/99
DRAWN	BRUCE MERKEL	07/16/99
CHECKED		
APPROVED		

FERMILAB PPD/ETT/ES CDMS (E-891)
ZIP MODULE
QET FRONT END

SIZE	FSCM NO.	DWG. NO.	REV
C			2
SCALE		SHEET 5-2	

REVISIONS			
REV	DESCRIPTION	DATE	APPROVED

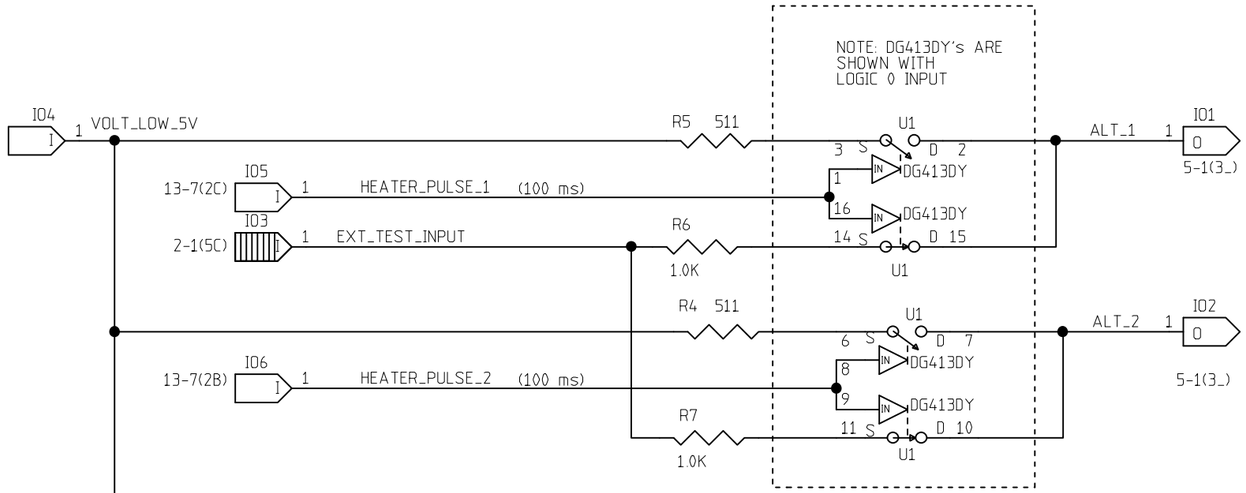

	NAME	DATE
ORIGINATOR	MERLE HALDEMAN	11/16/98
DRAWN	BRUCE MERKEL	07/16/99
CHECKED		
APPROVED		

FERMILAB PPD/ETT/ES CDMS (E-891)
ZIP MODULE
QET_SEL

SIZE	FSCM NO.	DWG. NO.	REV
B			

SCALE | SHEET 5-4

REVISIONS			
REV	DESCRIPTION	DATE	APPROVED

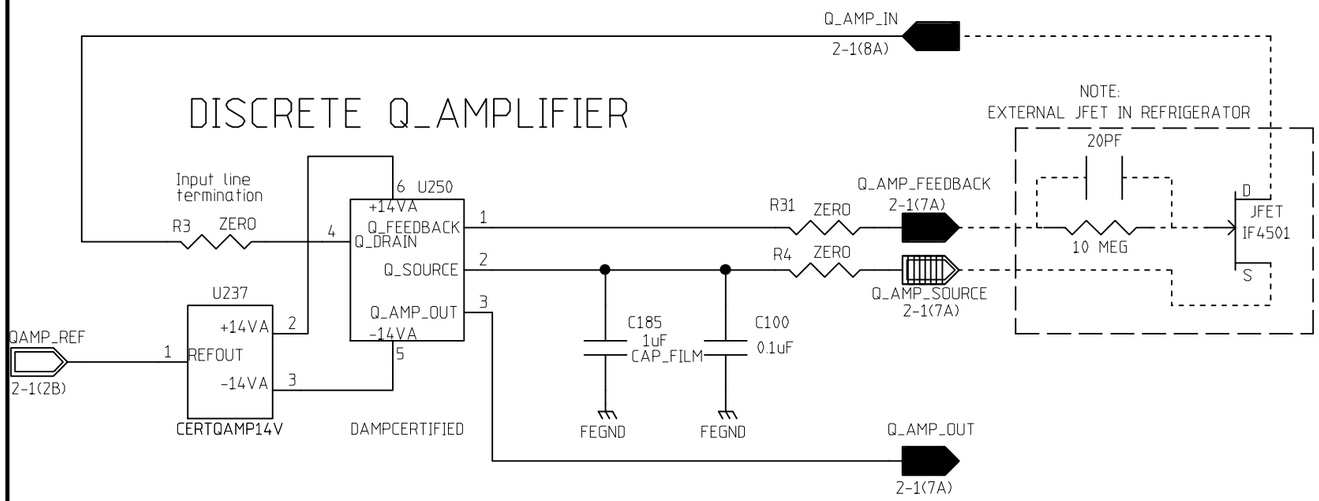

1: ALL RESISTORS ARE 1% UNLESS OTHERWISE STATED
2: ALL LOGIC LEVELS ARE HIGH TRUE

	NAME	DATE
ORIGINATOR	MERLE HALDEMAN	11/16/98
DRAWN	BRUCE MERKEL	11/16/98
CHECKED	TOM CRENNA	1/6/99
APPROVED		

FERMILAB PPD/ETT/ES CDMS (E-891)
ZIP MODULE
QAMP BLOCK DIAGRAM

SIZE	FSCM NO.	DWG. NO.	REV
B			1
SCALE		SHEET 6-1	

REVISIONS			
REV	DESCRIPTION	DATE	APPROVED

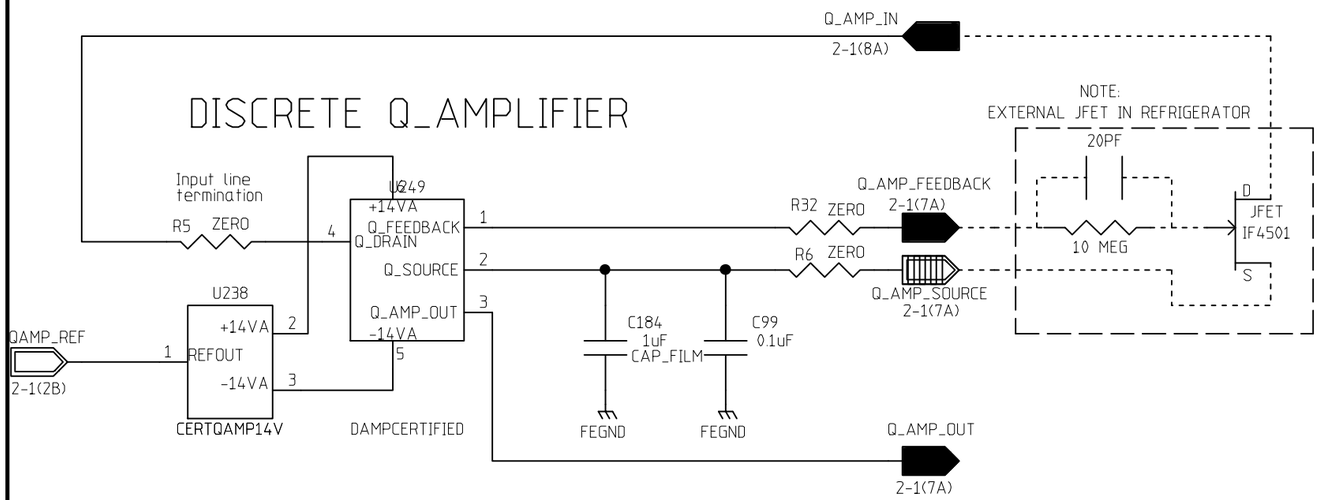

1: ALL RESISTORS ARE 1% UNLESS OTHERWISE STATED
2: ALL LOGIC LEVELS ARE HIGH TRUE

	NAME	DATE
ORIGINATOR	MERLE HALDEMAN	11/16/98
DRAWN	BRUCE MERKEL	11/16/98
CHECKED	TOM CRENNA	1/6/99
APPROVED		

FERMILAB PPD/ETT/ES CDMS (E-891)
ZIP MODULE
QAMP BLOCK DIAGRAM

SIZE	FSCM NO.	DWG. NO.	REV
B			1
SCALE		SHEET 6-1	

REVISIONS			
REV	DESCRIPTION	DATE	APPROVED
1	GENERAL MODIFICATIONS	9/27/99	B.MERKEL

DISCRETE Q_AMPLIFIER

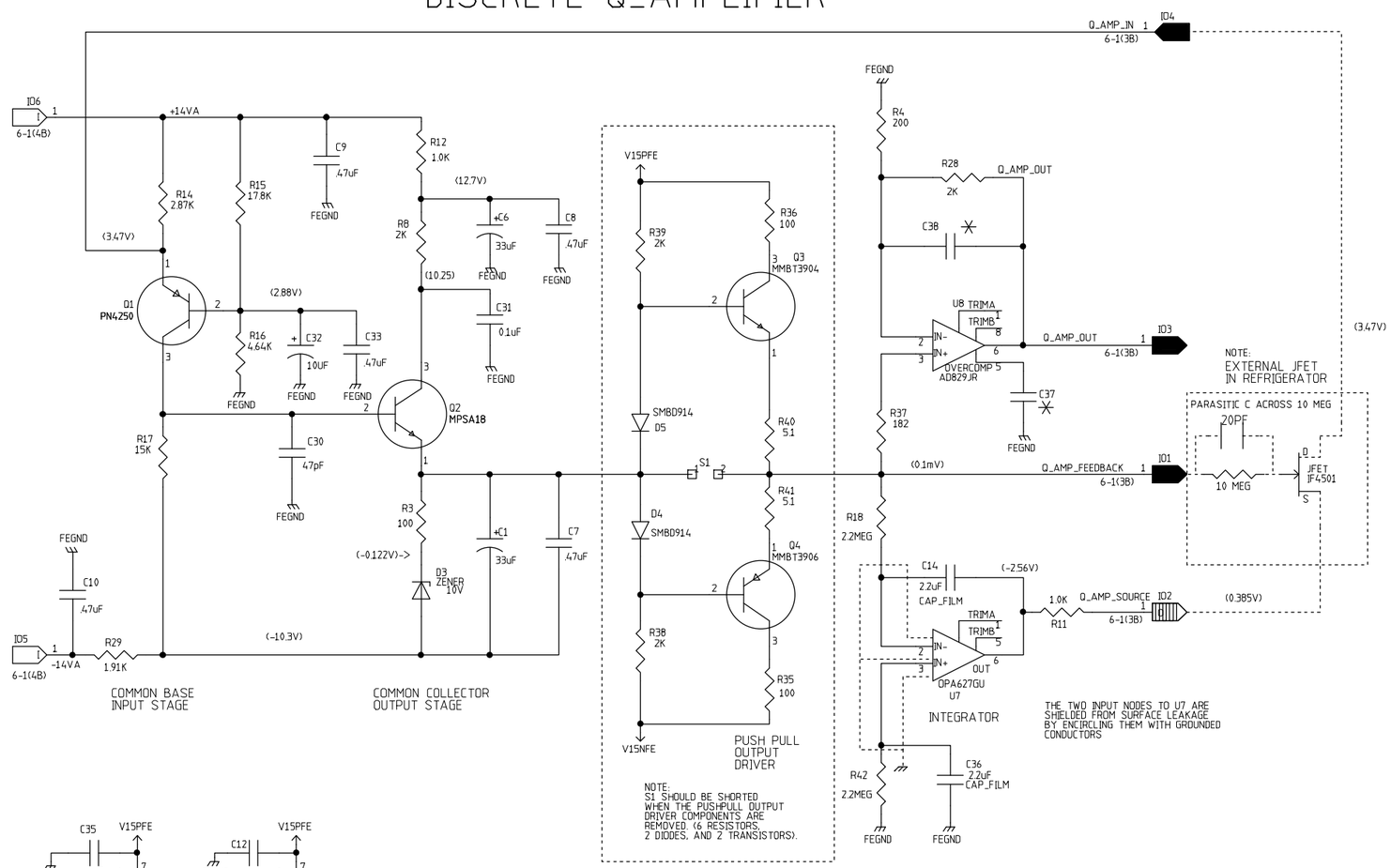

	NAME	DATE
ORIGINATOR	MERLE HALDEMAN	11/16/98
DRAWN	BRUCE MERKEL	11/16/98
CHECKED	TOM CRENNA	1/6/99
APPROVED		

FERMILAB PPD/EET/ES CDMS (E-891)
ZIP MODULE
DISCRETE Q AMPLIFIER

SIZE	FSCM NO.	DWG. NO.	REV
C			1
SCALE		SHEET 6-2	

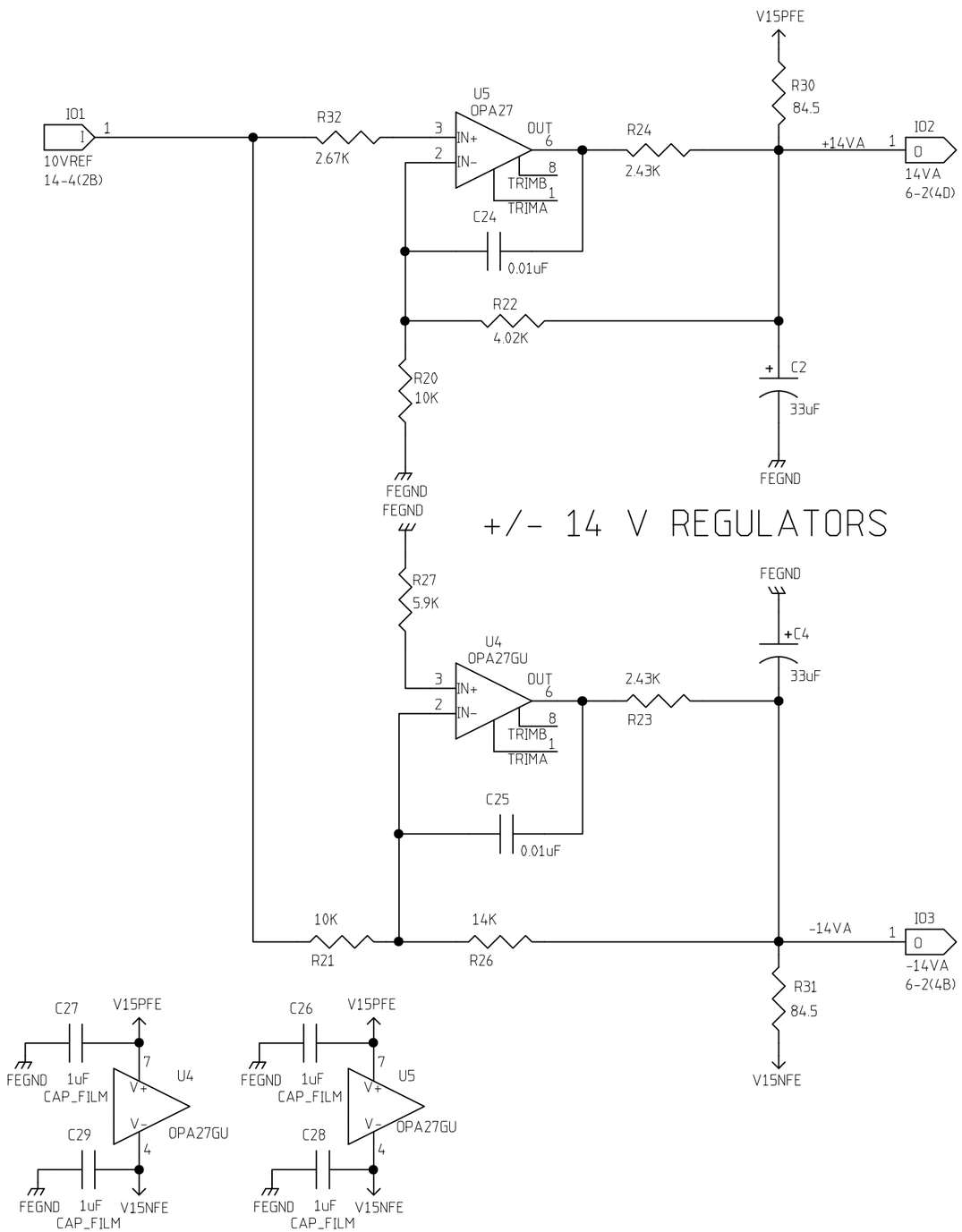

REVISIONS

REV	DESCRIPTION	DATE	APPROVED

	NAME	DATE
ORIGINATOR	MERLE HALDEMAN	11/16/98
DRAWN	BRUCE MERKEL	11/16/98
CHECKED	TOM CRENNA	1/6/99
APPROVED		

FERMILAB PPD/ ETT/ ES CDMS (E-891)

ZIP MODULE

Q AMP 14V

SIZE	FSCM NO.	DWG. NO.	REV
B			

SCALE | SHEET 6-3

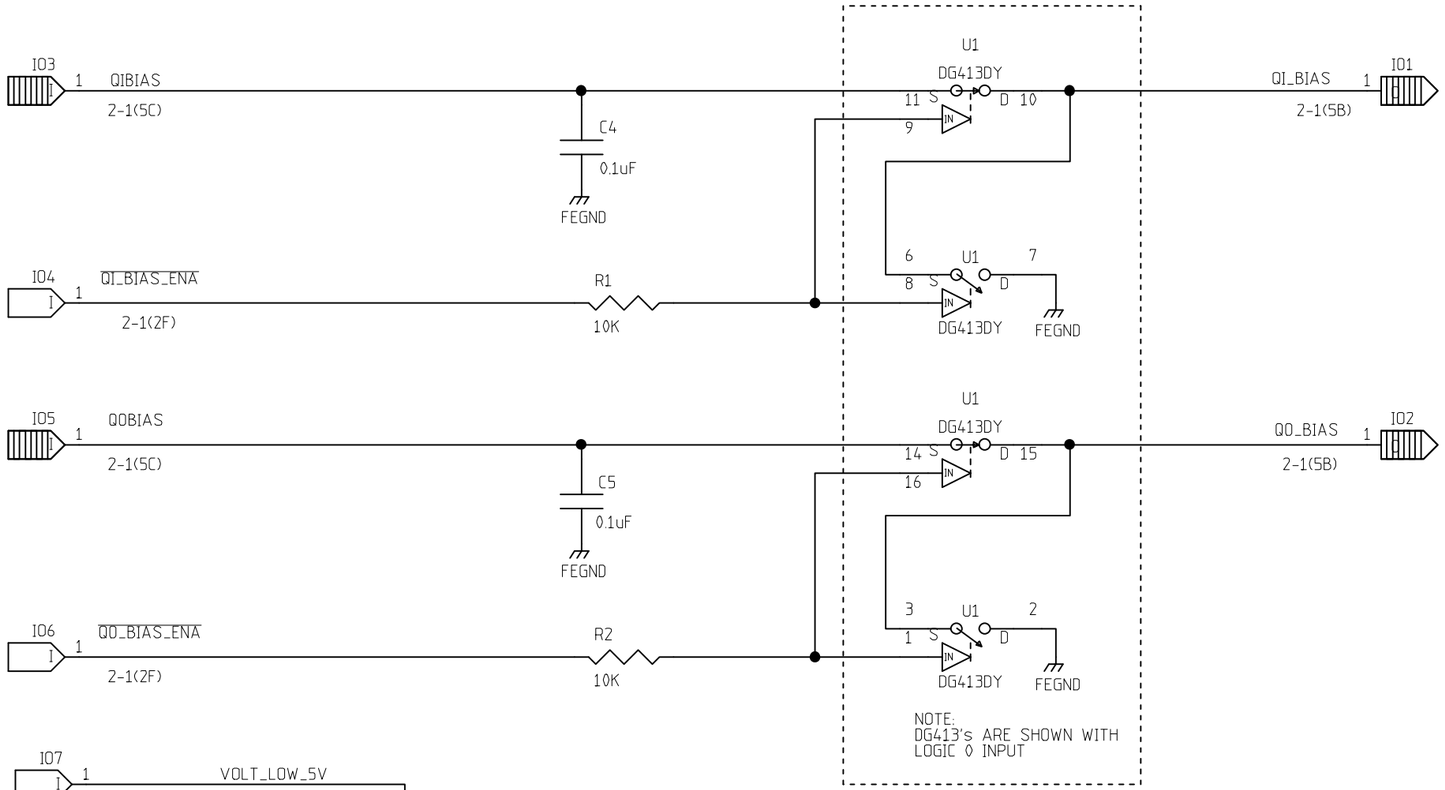

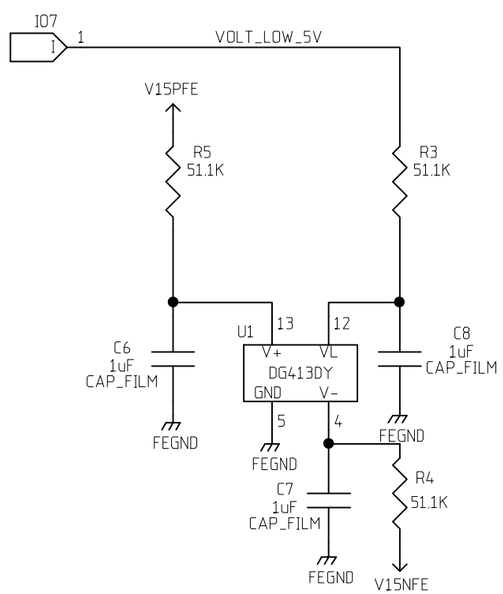

REVISIONS			
REV	DESCRIPTION	DATE	APPROVED

	NAME	DATE
ORIGINATOR	MERLE HALDEMAN	11/16/98
DRAWN	BRUCE MERKEL	12/08/98
CHECKED	TOM CRENNA	1/6/99
APPROVED		

FERMILAB PPD/ETT/ES CDMS (E-891)
ZIP MODULE
QBIAS FRONT END

SIZE	FSCM NO.	DWG. NO.	REV
B			
SCALE		SHEET 7-1	

REVISIONS			
REV	DESCRIPTION	DATE	APPROVED
0	MOVED DIGITAL OUT OF ANALOG AREA	3/24/99	B MERKEL

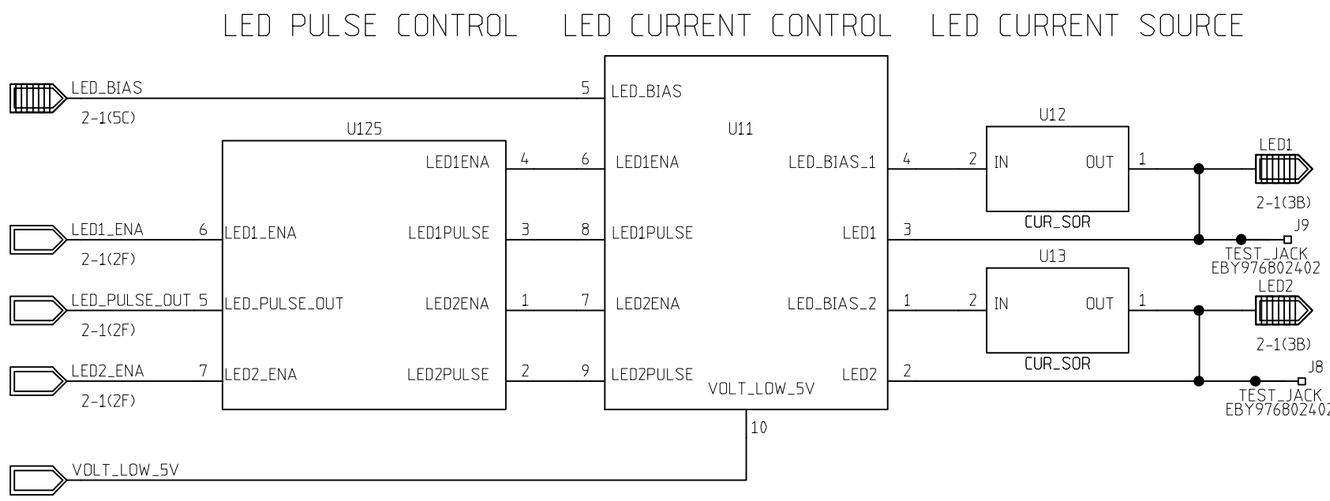

	NAME	DATE
ORIGINATOR	MERLE HALDEMAN	11/16/98
DRAWN	BRUCE MERKEL	3/24/99
CHECKED		
APPROVED		

FERMILAB PPD/ETT/ES CDMS (E-891)
ZIP MODULE
LED BLOCK DIAGRAM

SIZE	FSCM NO.	DWG. NO.	REV
B			

SCALE | SHEET 8-1

REVISIONS			
REV	DESCRIPTION	DATE	APPROVED

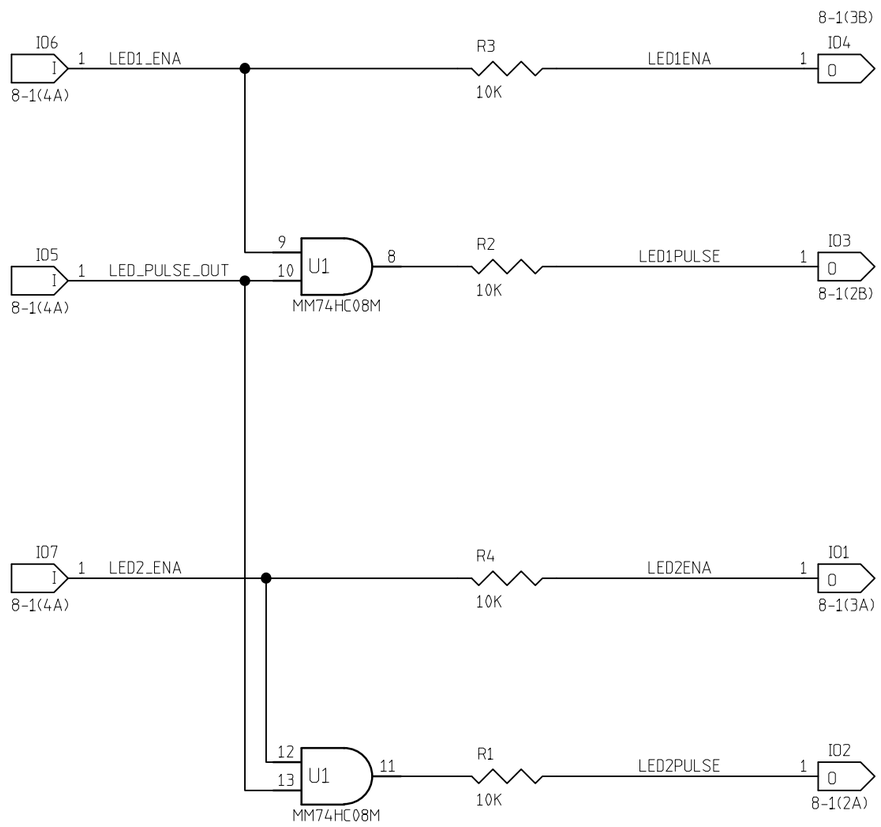

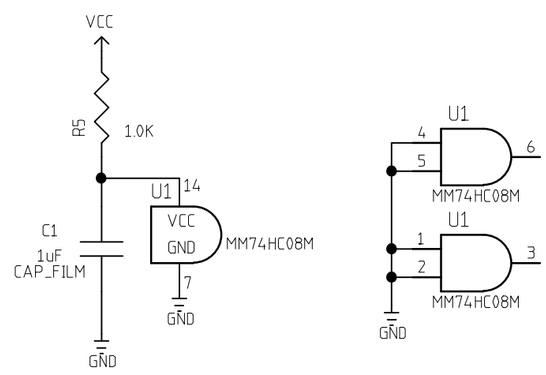

	NAME	DATE
ORIGINATOR	MERLE HALDEMAN	3/24/99
DRAWN	BRUCE MERKEL	3/24/99
CHECKED		
APPROVED		

FERMILAB PPD/ ETT/ ES CDMS(E-891)
ZIP MODULE
LED PULSE CONTROL

SIZE	FSCM NO.	DWG. NO.	REV
B			

SCALE		SHEET 8-3

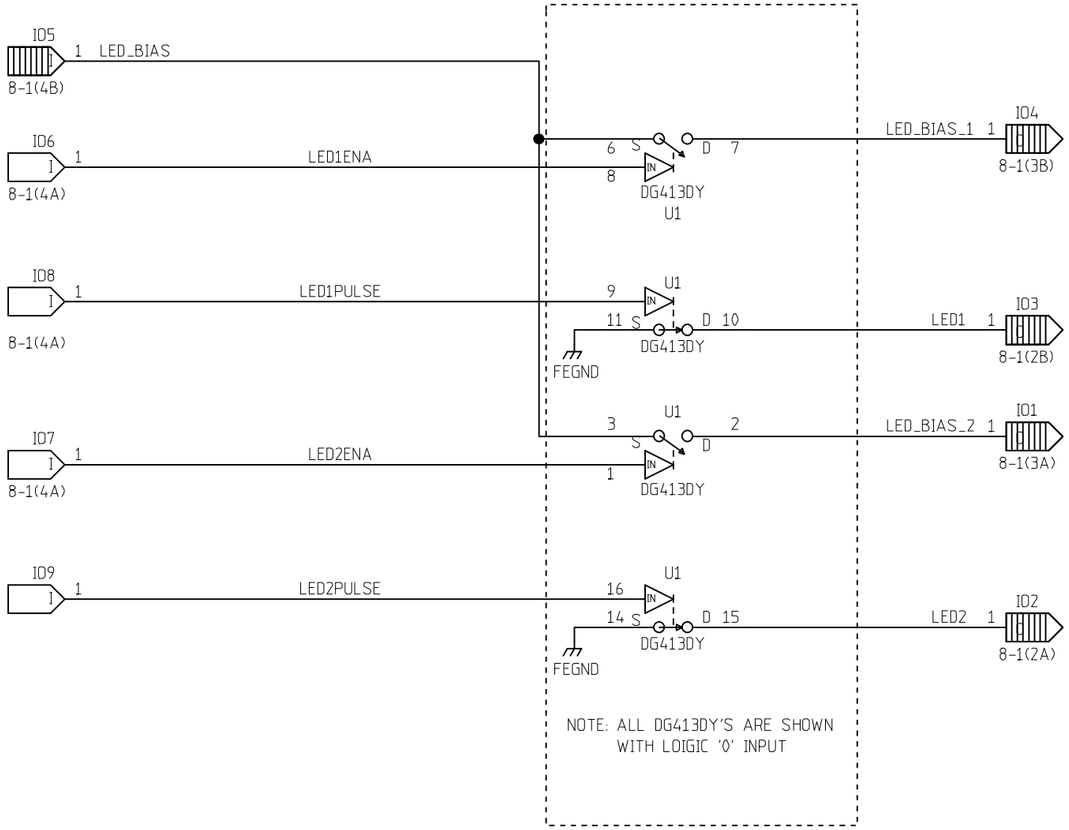

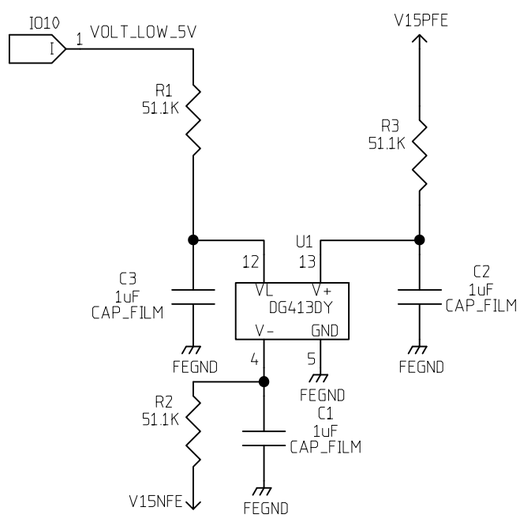

REVISIONS

REV	DESCRIPTION	DATE	APPROVED
0	ADDED A 5V OUTSIDE SOURCE AND REMOVED THE DIGITAL LOGIC TO THE DIGITAL SECTION	3/24/99	B MERKEL

	NAME	DATE
ORIGINATOR	MERLE HALDEMAN	11/16/98
DRAWN	BRUCE MERKEL	12/17/98
CHECKED	TOM CRENNA	1/6/99
APPROVED		

FERMILAB PPD/ ETT/ ES CDMS(E-891)
ZIP MODULE
LED CURRENT CONTROL

SIZE	FSCM NO.	DWG. NO.	REV
B			

SCALE | SHEET 8-4

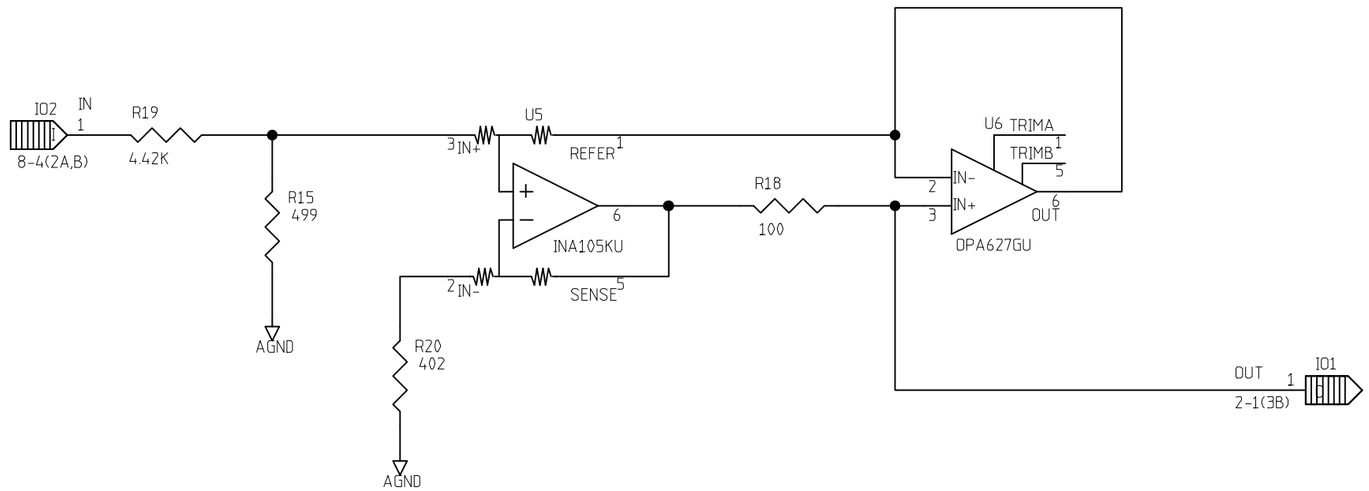

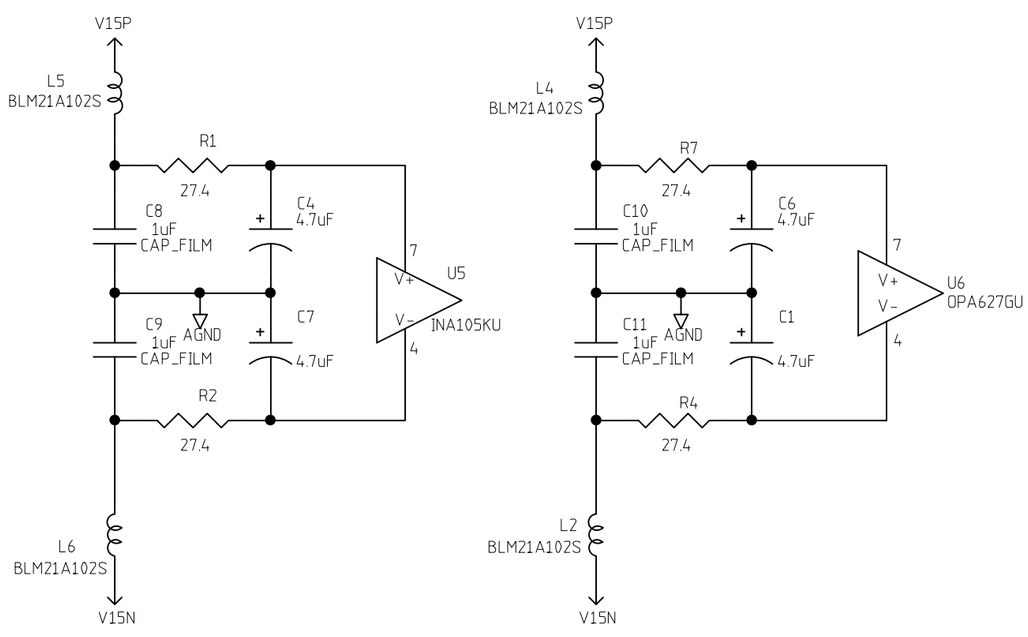

REVISIONS

REV	DESCRIPTION	DATE	APPROVED
1	CHANGED RESISTOR R18 TO 499 OHM	9/25/00	BDM
2	CHANGED RESISTOR R18 TO 100 OHM ADDED RESISTOR R19	4/4/01	BDM
3	CHANGED RESISTORS R15 AND R19 AND ADDED RESISTOR R20	6/19/01	BDM

	NAME	DATE
ORIGINATOR	MERLE HALDEMAN	11/16/98
DRAWN	BRUCE MERKEL	12/09/98
CHECKED	TOM CRENNA	1/6/99
APPROVED		

FERMILAB PPD/ ETT/ ES CDMS(E-891)
ZIP MODULE
LED CURRENT SOURCE

SIZE	FSCM NO.	DWG. NO.	REV
B			3

SCALE | SHEET 8-5

FET_HEATER

REVISIONS			
REV	DESCRIPTION	DATE	APPROVED
1	SCHEMATIC UPDATED FOR VERSION 1	10/18/99	BDM

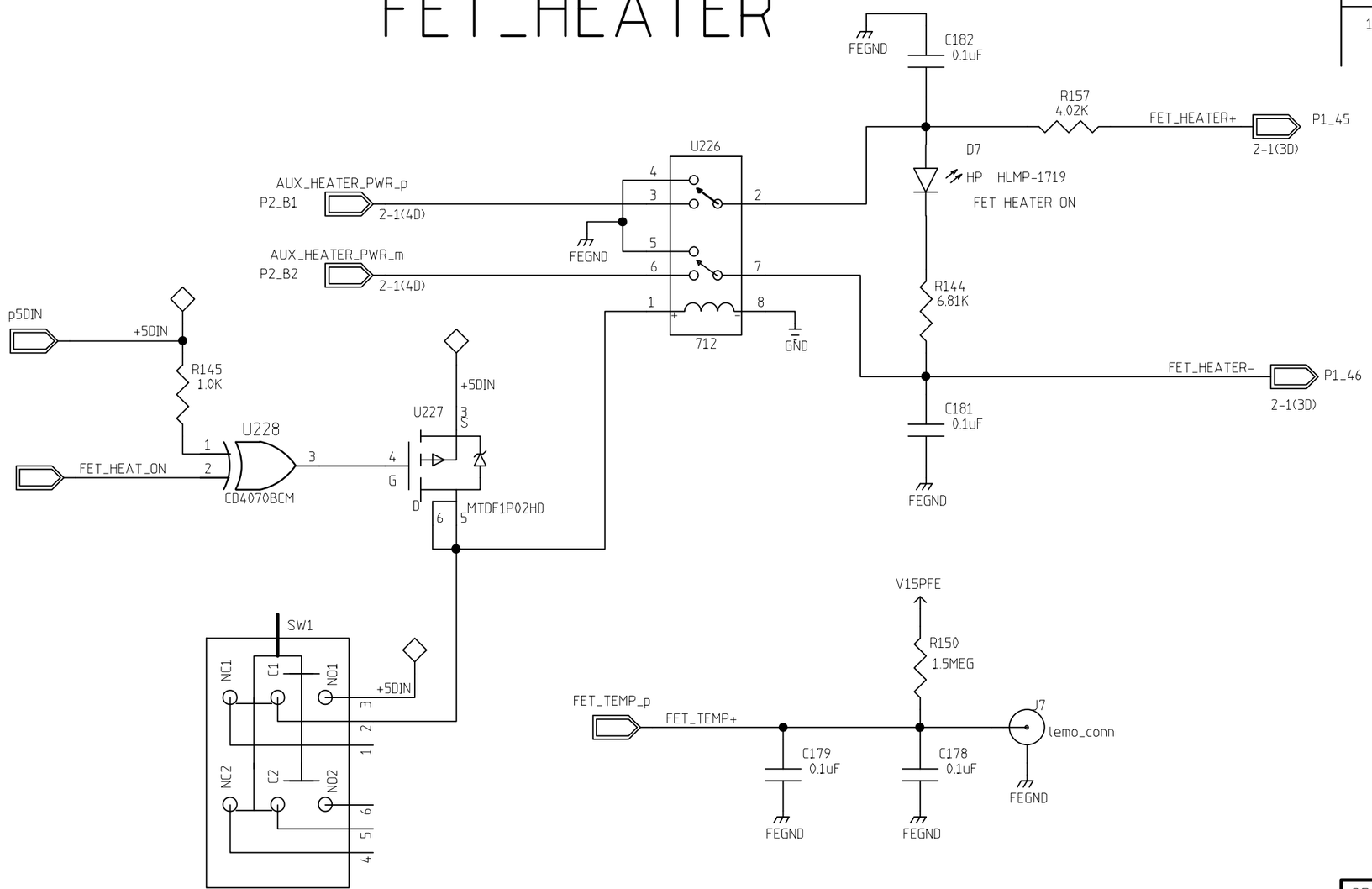

MONENTARY PUSH BUTTON
FRONT PANEL MOUNT SWITCH

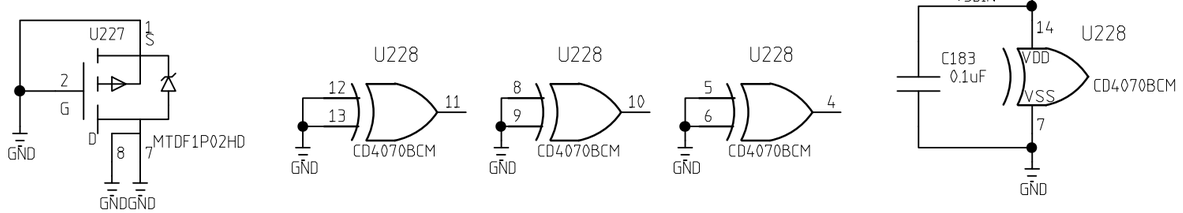

1: ALL RESISTORS ARE 1% UNLESS OTHERWISE STATED
2: ALL LOGIC LEVELS ARE HIGH TRUE

	NAME	DATE
ORIGINATOR	MERLE HALDEMAN	9/23/99
DRAWN	BRUCE MERKEL	9/23/99
CHECKED		
APPROVED		

FERMILAB PPD/EET/ES CDMS (E-891)
ZIP MODULE
FET_HEATER

SIZE	FSCM NO.	DWG. NO.	REV
B			1
SCALE		SHEET 9-1	

REVISIONS			
REV	DESCRIPTION	DATE	APPROVED
2	MODIFICATIONS FOR BANDWIDTH ADJ.	9/14/00	BOM

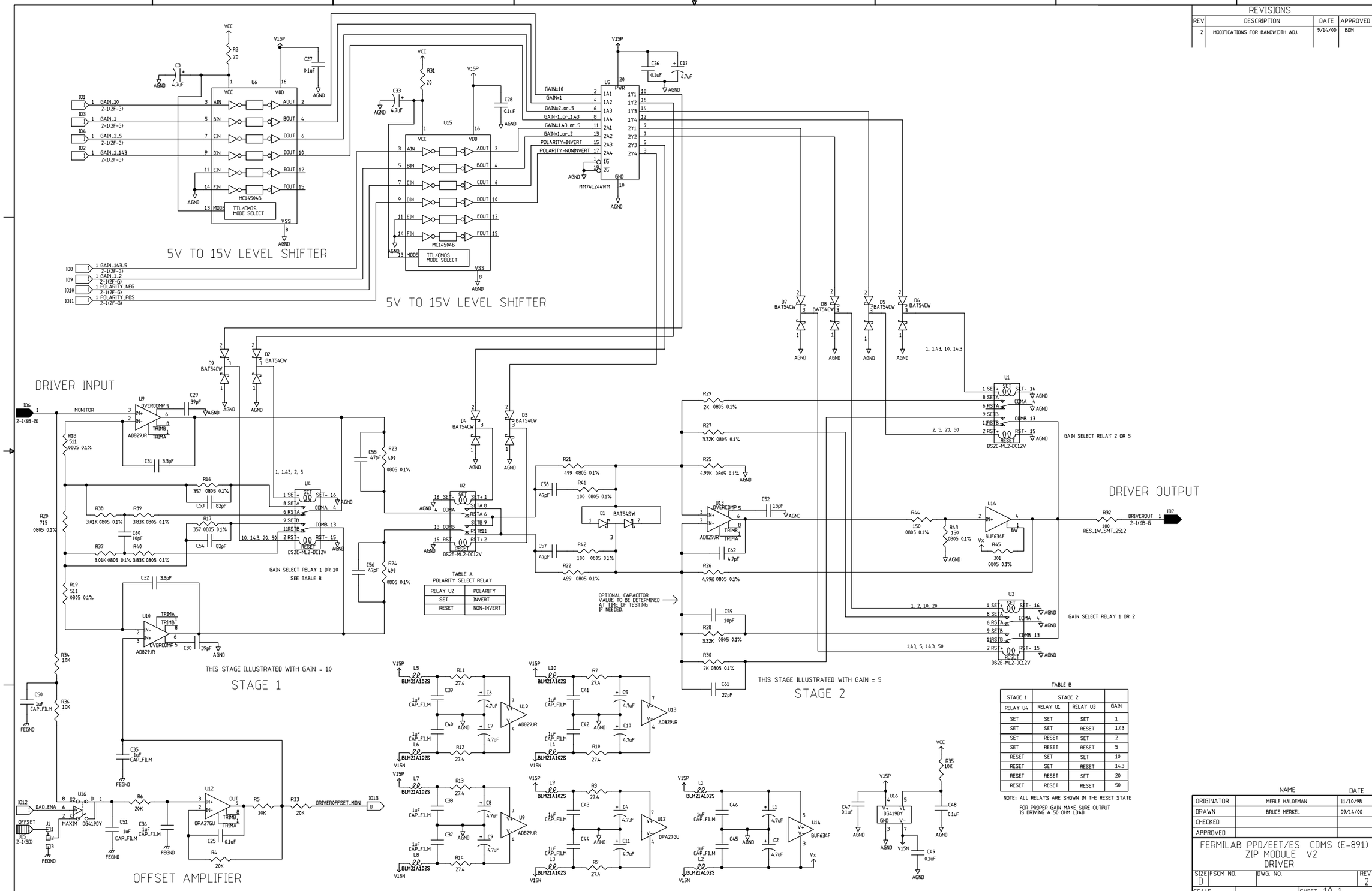

REVISIONS			
REV	DESCRIPTION	DATE	APPROVED
A	CHANGED U1 FROM ANALOG DEVUCES SSM2141S TO LINEAR TECHNOLOGY LT1357CS8 FOR FASTER RESPONSE ALSO ADDED TWO 4.7uF CAPS TO BYPASS	4/28/99	M.HALDEMAN

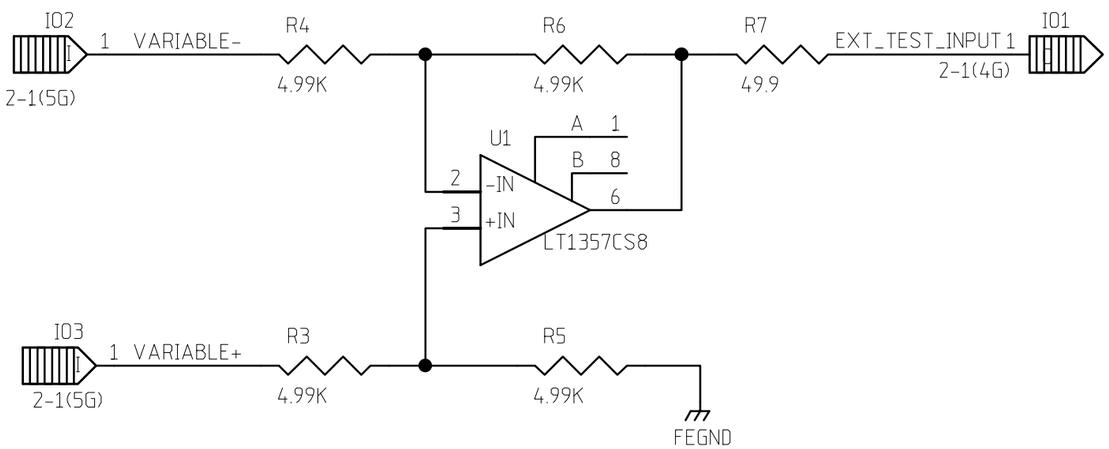

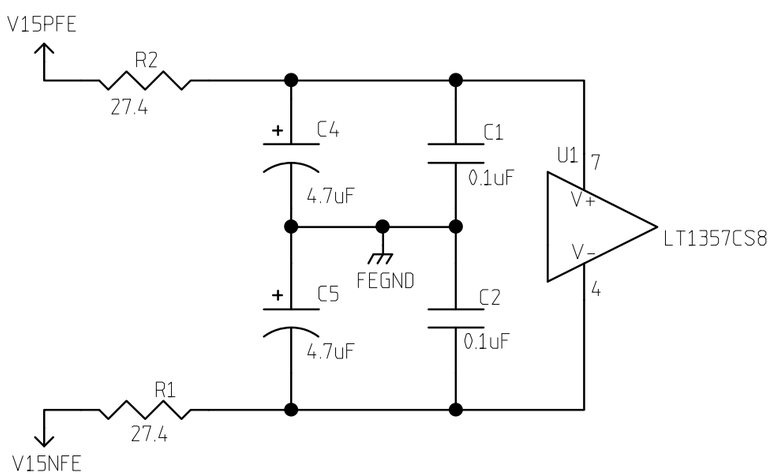

NOTE: FOR HIGHER SPEED USE A LT1363CS8

	NAME	DATE
ORIGINATOR	MERLE HALDEMAN	11/16/98
DRAWN	BRUCE MERKEL	11/16/98
CHECKED	TOM CRENNA	1/8/99
APPROVED		

FERMILAB PPD/ETT/ES CDMS (E-891)
ZIP MODULE
EXTERNAL TEST RECEIVER

SIZE	FSCM NO.	DWG. NO.	REV
A			A

SCALE | SHEET 11-1

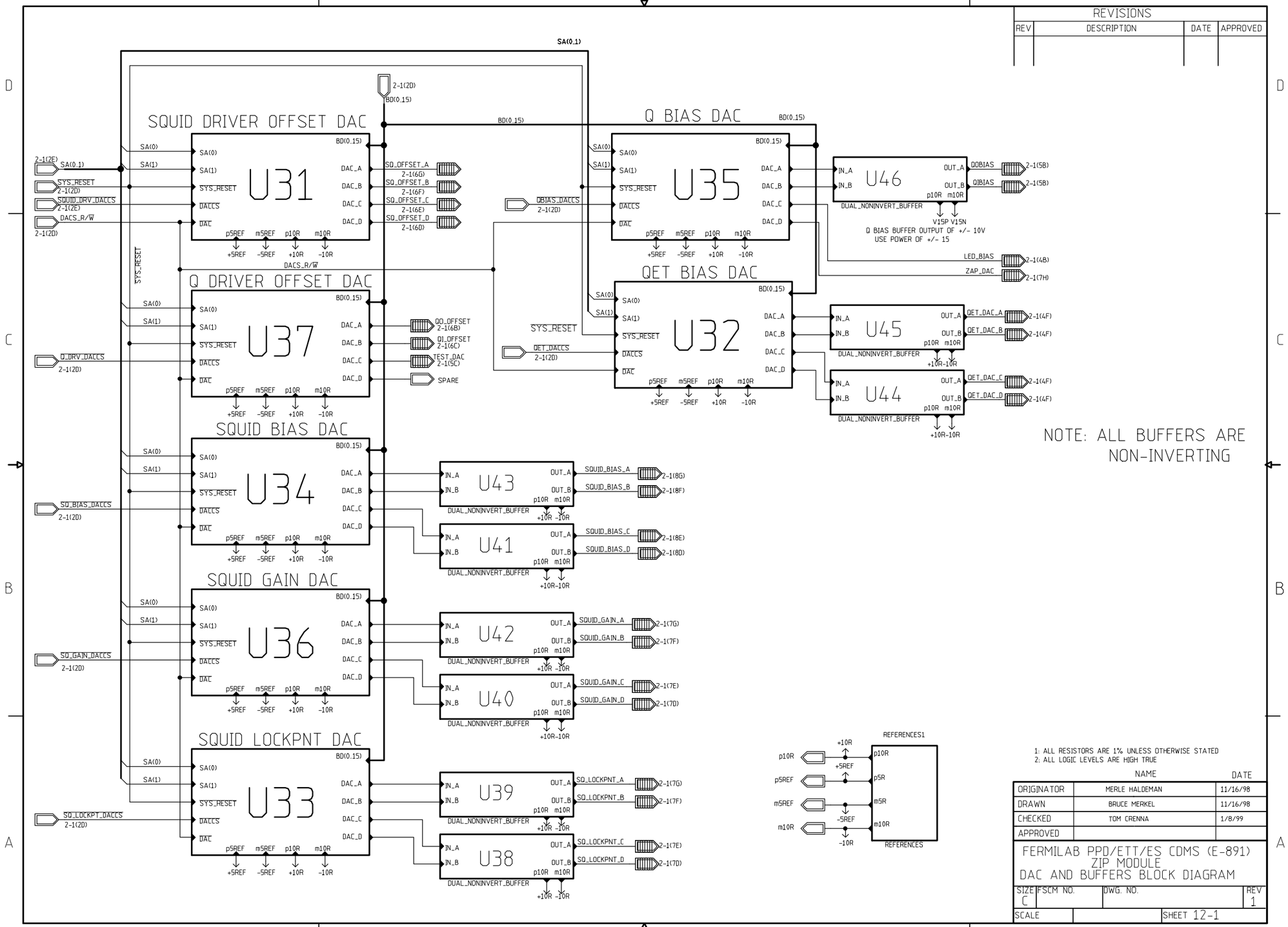

REVISIONS			
REV	DESCRIPTION	DATE	APPROVED

1: ALL RESISTORS ARE 1% UNLESS OTHERWISE STATED
2: ALL LOGIC LEVELS ARE HIGH TRUE

	NAME	DATE
ORIGINATOR	MERLE HALDEMAN	11/16/98
DRAWN	BRUCE MERKEL	11/16/98
CHECKED	TOM CRENNA	1/8/99
APPROVED		

FERMILAB PPD/ETT/ES CDMS (E-891)
ZIP MODULE
DAC AND BUFFERS BLOCK DIAGRAM

SIZE	FSCM NO.	DWG. NO.	REV
C			1
SCALE		SHEET 12-1	

DAC 10 VOLT REGULATOR

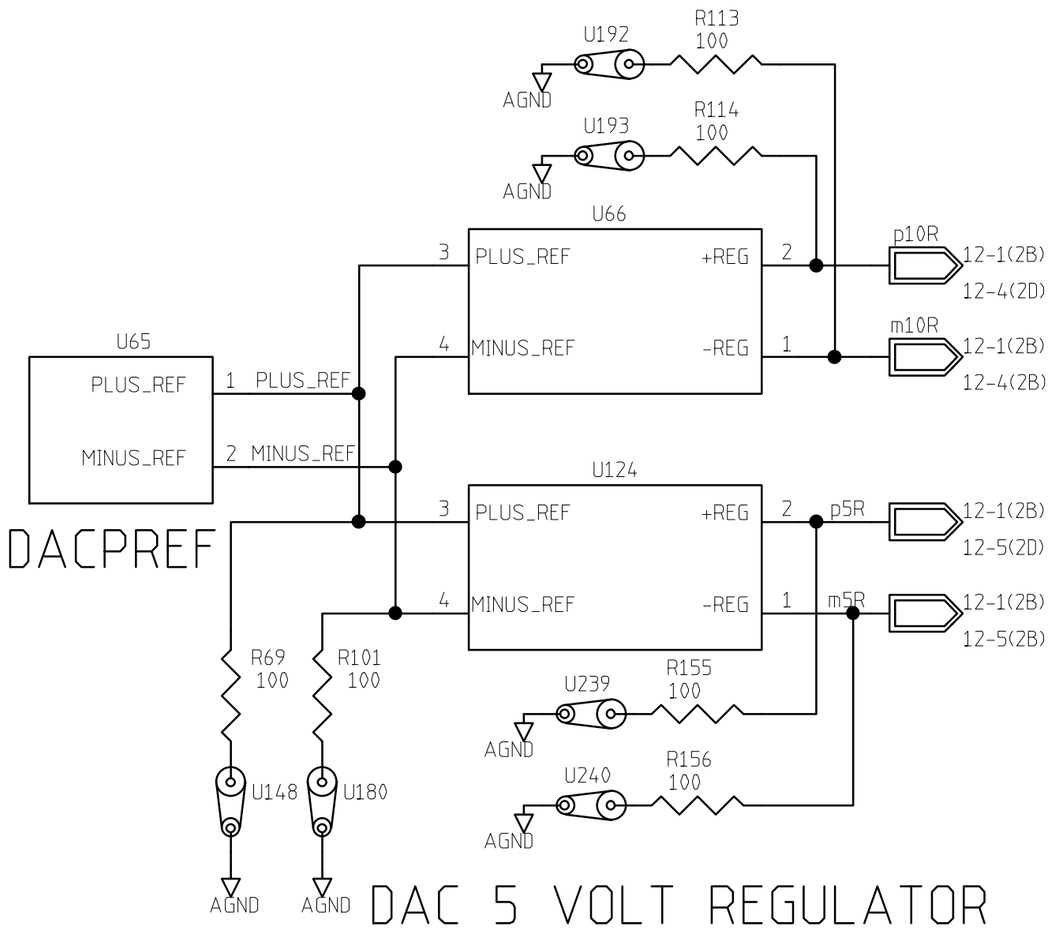

REVISIONS			
REV	DESCRIPTION	DATE	APPROVED
0	UNDER DEVELOPMENT	1-19-99	

1: ALL RESISTORS ARE 1% UNLESS OTHERWISE STATED
2: ALL LOGIC LEVELS ARE HIGH TRUE

	NAME	DATE
ORIGINATOR	MERLE HALDEMAN	11/16/98
DRAWN	BRUCE MERKEL	11/16/98
CHECKED	TOM CRENNA	1/8/99
APPROVED		

FERMILAB PPD/ ETT/ ES CDMS(E-891)
ZIP MODULE
DAC REFERENCES

SIZE	FSCM NO.	DWG. NO.	REV
A			

SCALE | SHEET 12-2

REVISIONS			
REV	DESCRIPTION	DATE	APPROVED

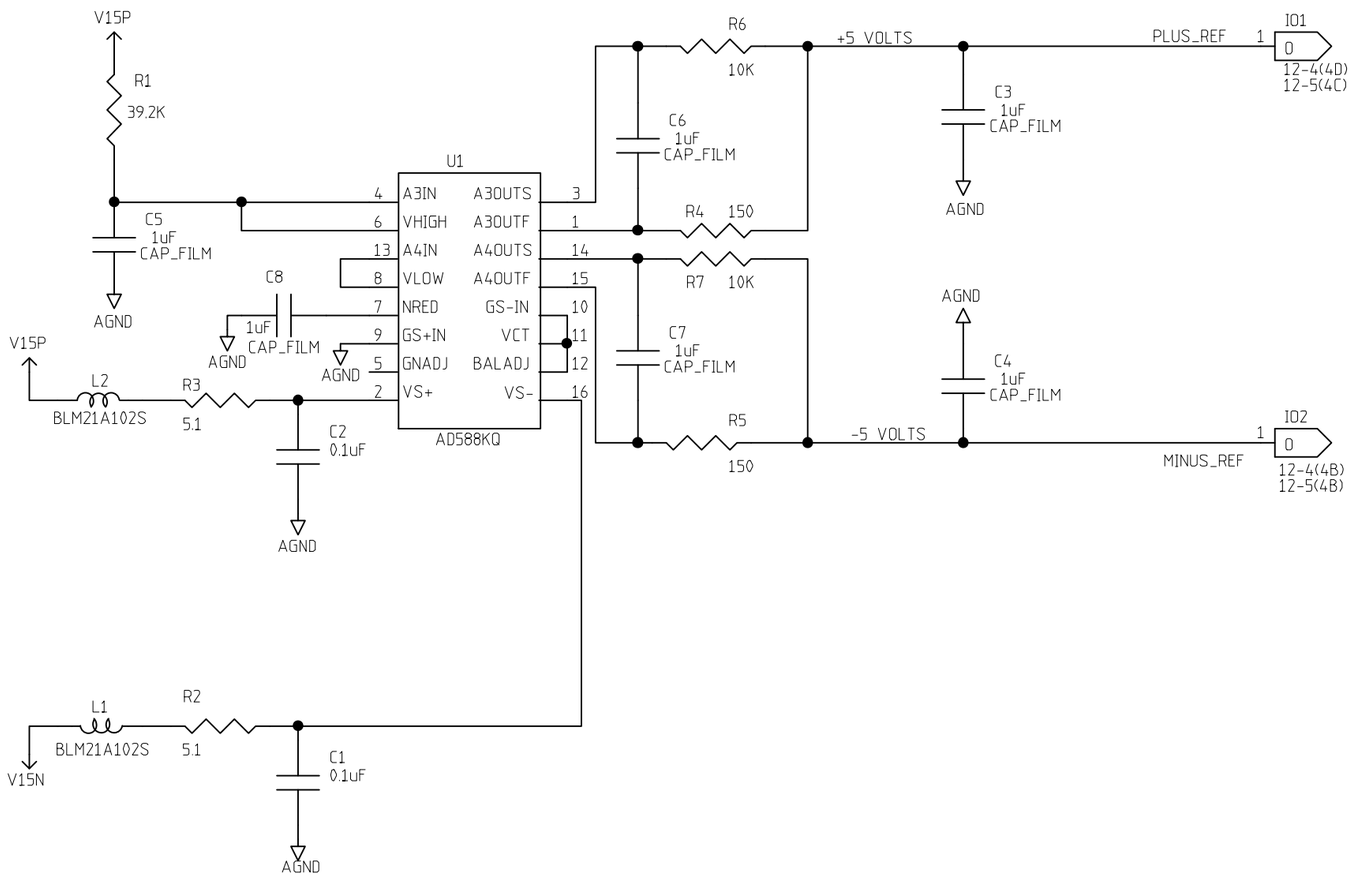

	NAME	DATE
ORIGINATOR	MERLE HALDEMAN	12/01/98
DRAWN	BRUCE MERKEL	12/01/98
CHECKED	TOM CRENNA	1/8/99
APPROVED		

FERMILAB PPD/ ETT/ ES CDMS(E-891)
ZIP MODULE
DAC PRECISION REFERENCE

SIZE	FSCM NO.	DWG. NO.	REV
B			

SCALE | SHEET 12-3

REVISIONS			
REV	DESCRIPTION	DATE	APPROVED
0	USE FOR BOTH 10 & 5 VOLT REFERENCE	3/23/99	B MERKEL
1	replaced regulators with transistors	4/11/00	B MERKEL

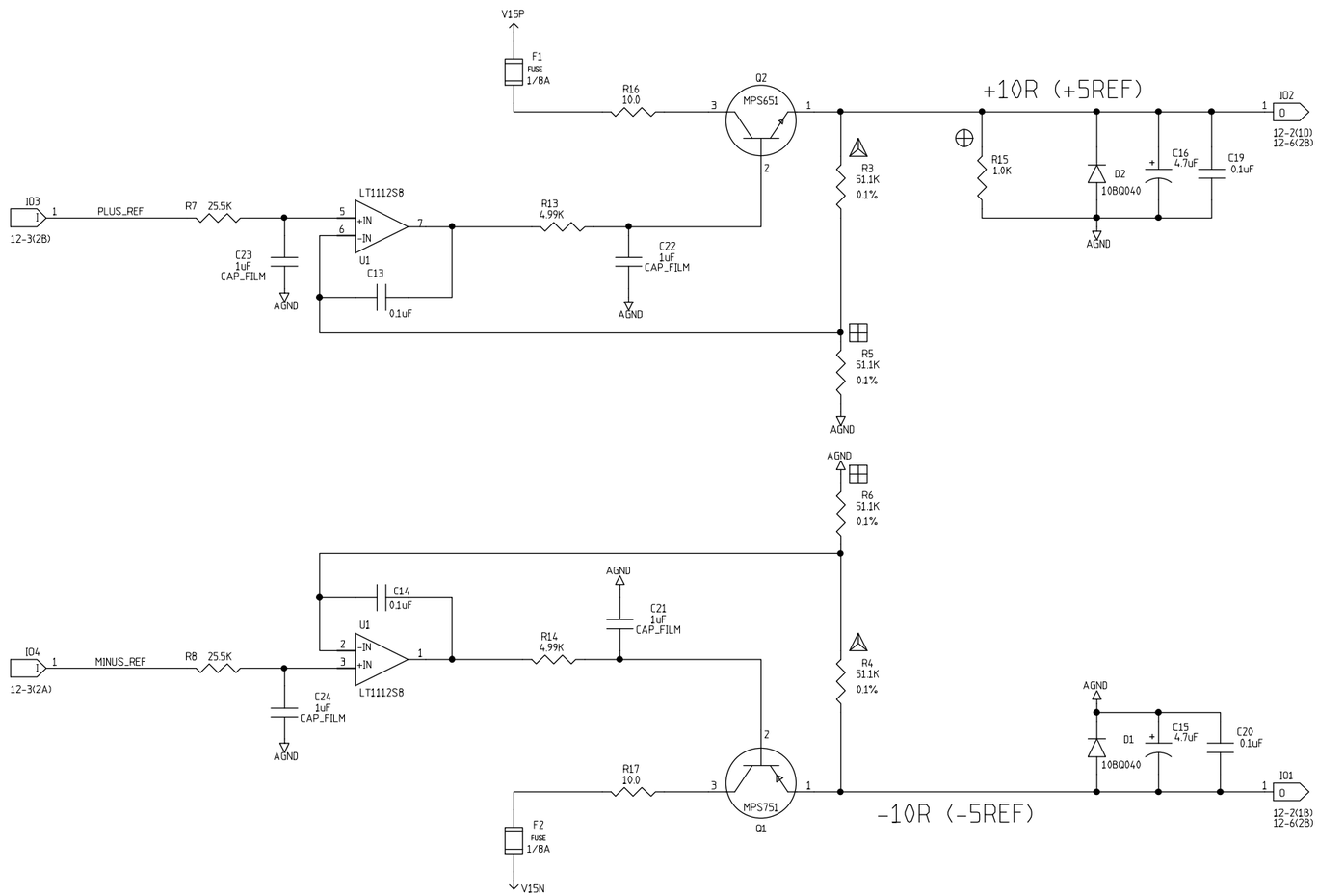

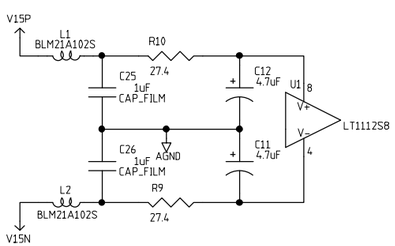

RESISTANCE CHART FOR STUFFING THE DAC REGULATORS

SYMBOL	+5 VOLT	- 5 VOLT	+10 VOLT	-10 VOLT
⊕	1K OHM	N.U.	N.U.	N.U.
△	25.5K OHM	25.5K OHM	51.1K OHM	51.1K OHM
⊞	N.U.	N.U.	51.1K OHM	51.1K OHM

N.U. = NOT USED

NOTES:

1: ALL RESISTORS ARE 1% UNLESS OTHERWISE SPECIFIED

2: ALL LOGIC STATEMENTS ARE HIGH TRUE

	NAME	DATE
ORIGINATOR	MERLE HALDEMAN	12/01/98
DRAWN	BRUCE MERKEL	04/11/00
CHECKED	TOM CRENNA	1/8/99
APPROVED		

FERMILAB PPD/ ETT/ ES CDMS(E-891)
ZIP MODULE
DAC +/- VOLTAGE REFERENCES

SIZE	FSCM NO.	DWG. NO.	REV
C			1
SCALE		SHEET 12-4	

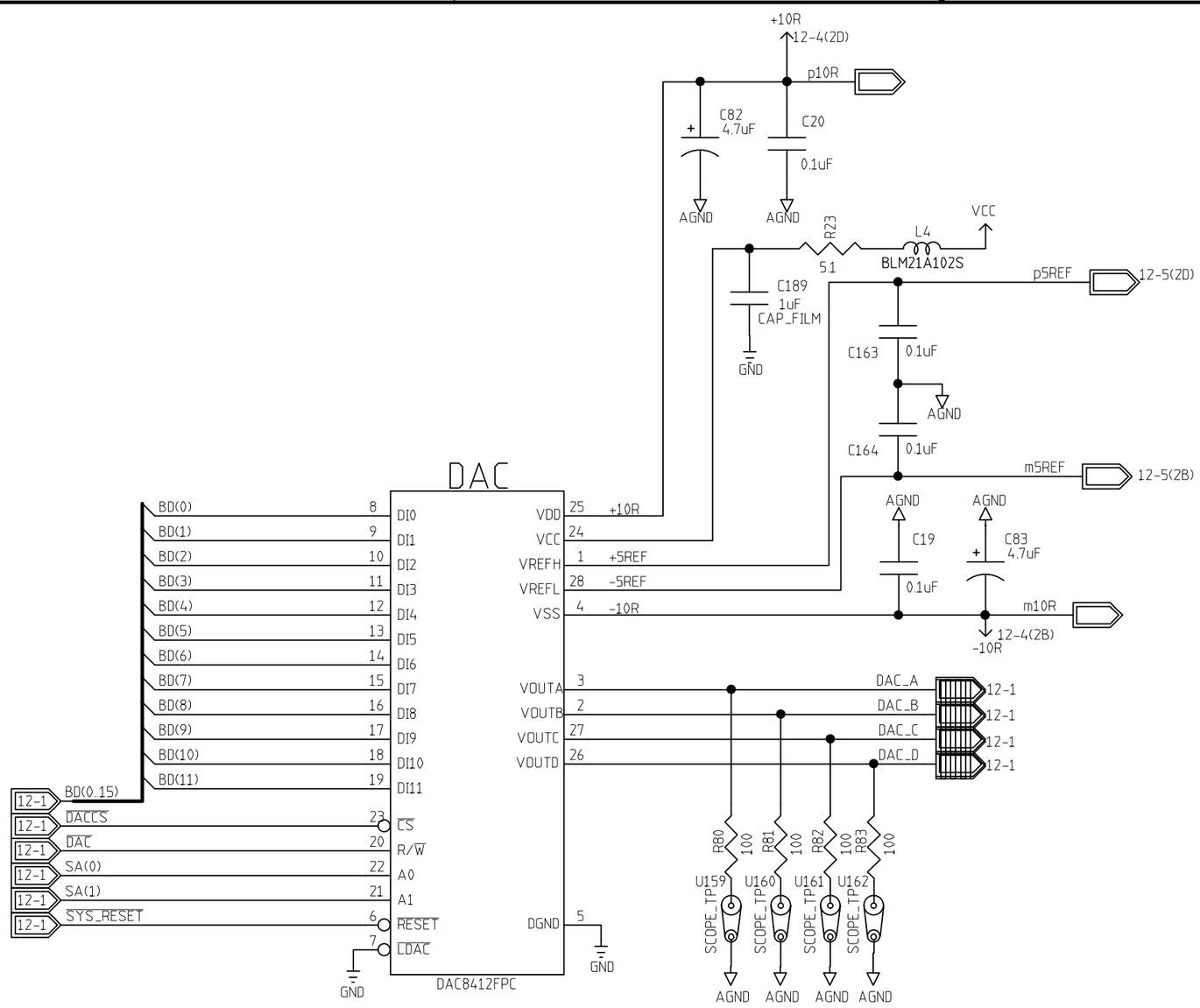

REVISIONS			
REV	DESCRIPTION	DATE	APPROVED
	UNDER DEVELOPMENT	1-19-99	

	NAME	DATE
ORIGINATOR	MERLE HALDEMAN	11/17/98
DRAWN	BRUCE MERKEL	11/17/98
CHECKED	TOM CRENNA	1/8/99
APPROVED		

FERMILAB PPD/ ETT/ ES CDMS(E-891)
ZIP MODULE
DAC'S_1_TO_7

SIZE	FSCM NO.	DWG. NO.	REV
B			1
SCALE		SHEET 12-6	

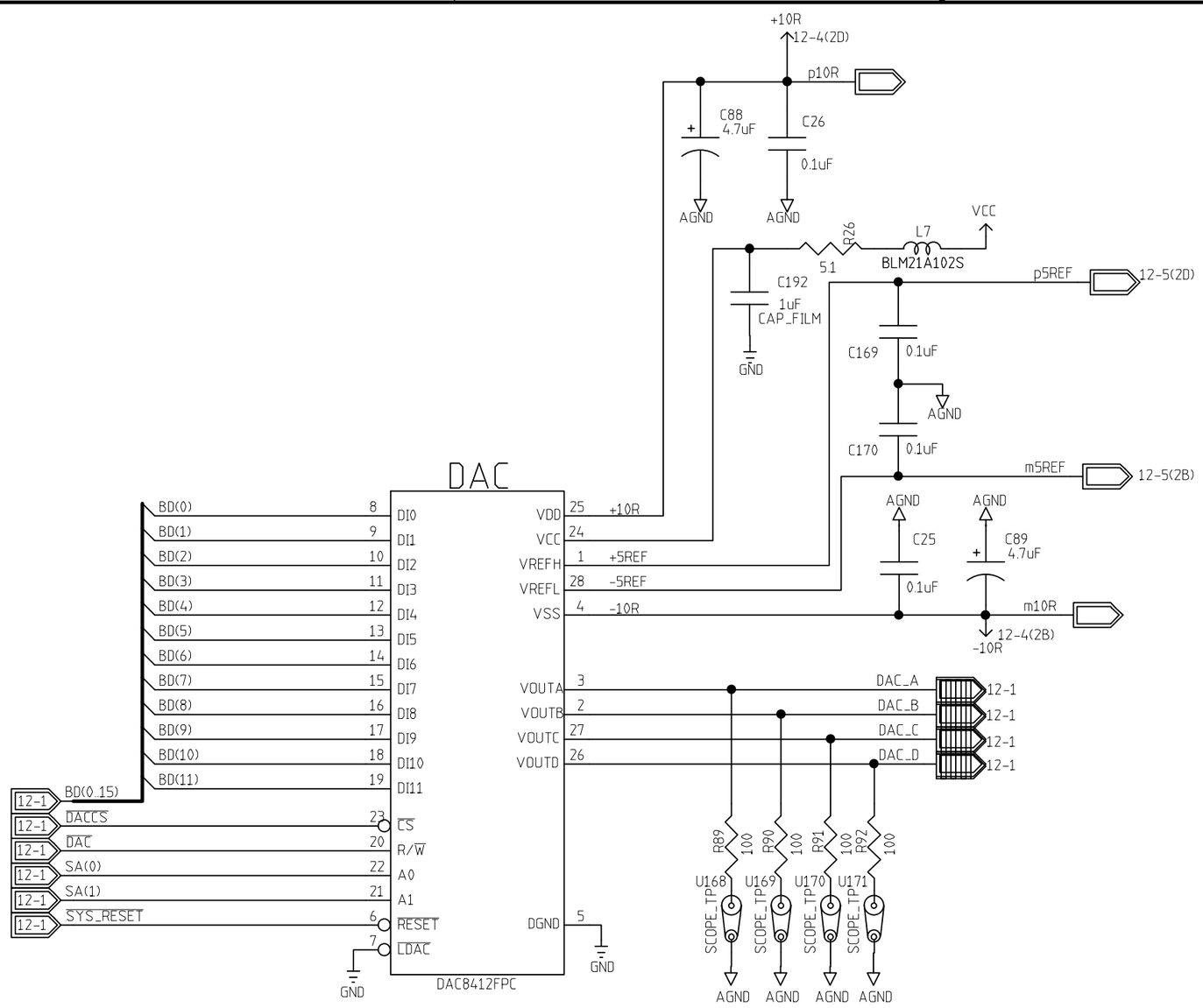

REVISIONS			
REV	DESCRIPTION	DATE	APPROVED
	UNDER DEVELOPMENT	1-19-99	

	NAME	DATE
ORIGINATOR	MERLE HALDEMAN	11/17/98
DRAWN	BRUCE MERKEL	11/17/98
CHECKED	TOM CRENNA	1/8/99
APPROVED		

FERMILAB PPD/ ETT/ ES CDMS(E-891)
ZIP MODULE
DAC'S_1_TO_7

SIZE	FSCM NO.	DWG. NO.	REV
B			1
SCALE		SHEET 12-6	

U32

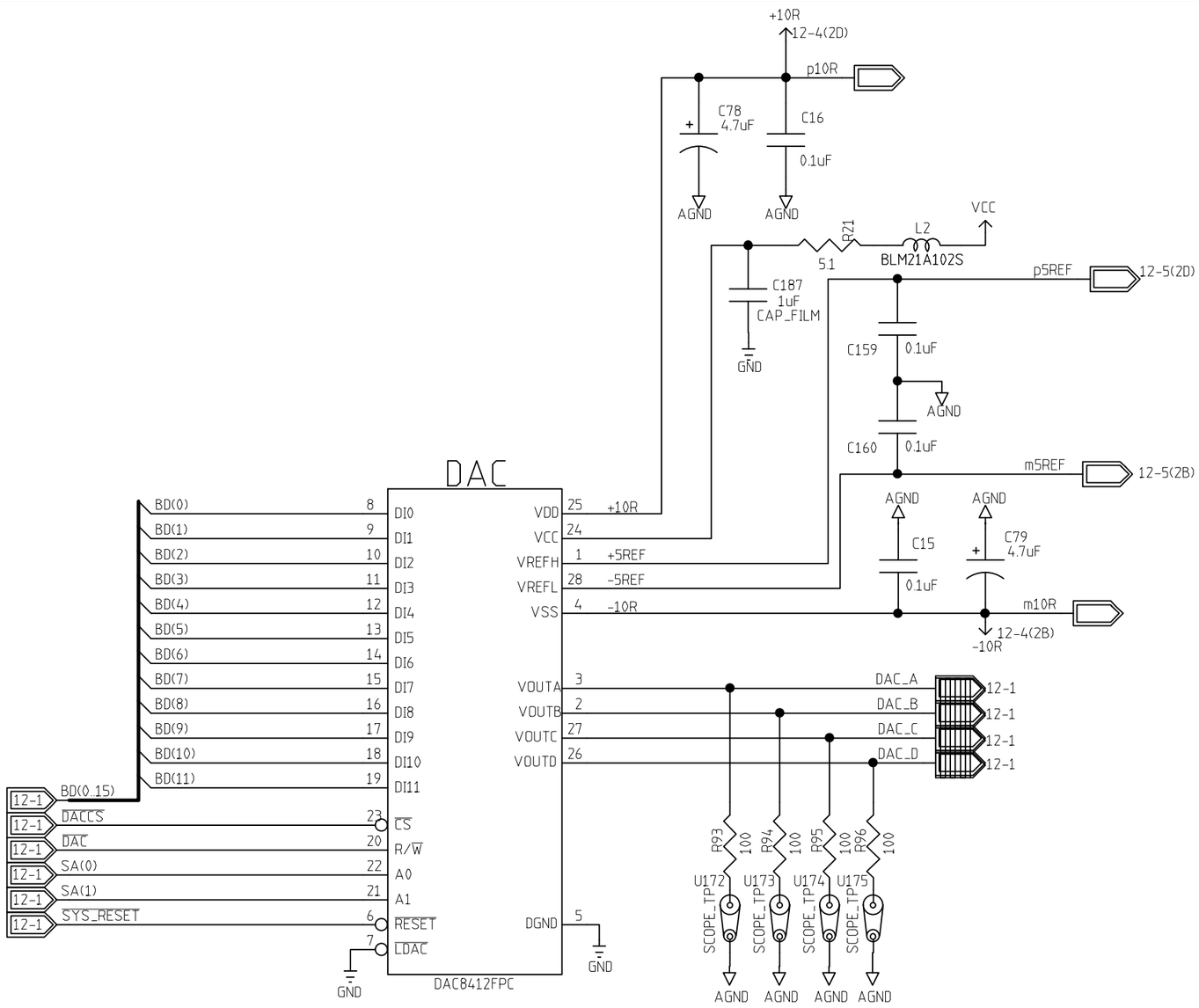

REVISIONS			
REV	DESCRIPTION	DATE	APPROVED
	UNDER DEVELOPMENT	1-19-99	

	NAME	DATE
ORIGINATOR	MERLE HALDEMAN	11/17/98
DRAWN	BRUCE MERKEL	11/17/98
CHECKED	TOM CRENNA	1/8/99
APPROVED		

FERMILAB PPD/ ETT/ ES CDMS(E-891)
ZIP MODULE
DAC'S_1_TO_7

SIZE	FSCM NO.	DWG. NO.	REV
B			1
SCALE		SHEET 12-6	

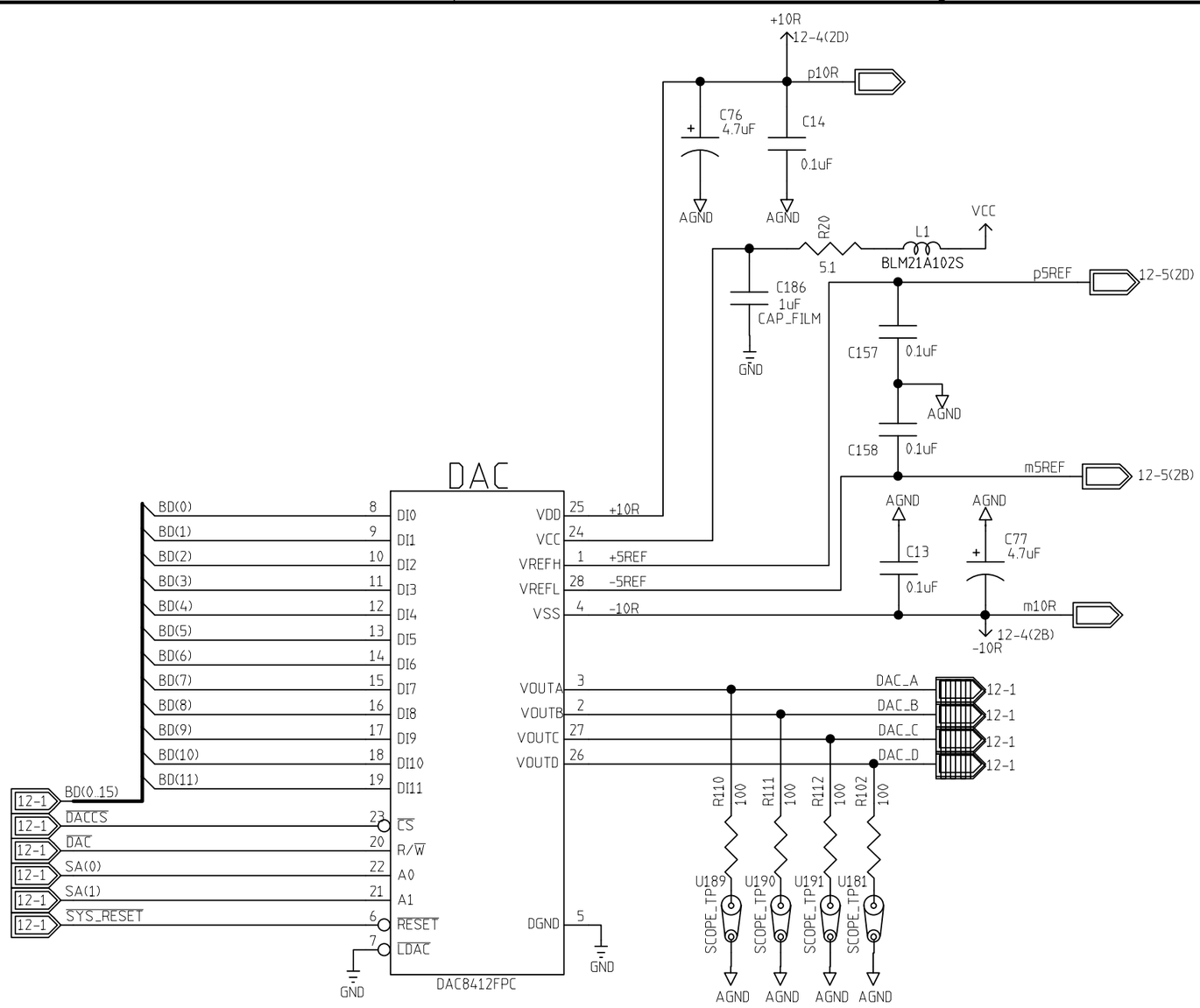

REVISIONS			
REV	DESCRIPTION	DATE	APPROVED
	UNDER DEVELOPMENT	1-19-99	

	NAME	DATE
ORIGINATOR	MERLE HALDEMAN	11/17/98
DRAWN	BRUCE MERKEL	11/17/98
CHECKED	TOM CRENNA	1/8/99
APPROVED		

FERMILAB PPD/ ETT/ ES CDMS(E-891)
ZIP MODULE
DAC'S_1_TO_7

SIZE	FSCM NO.	DWG. NO.	REV
B			1
SCALE		SHEET 12-6	

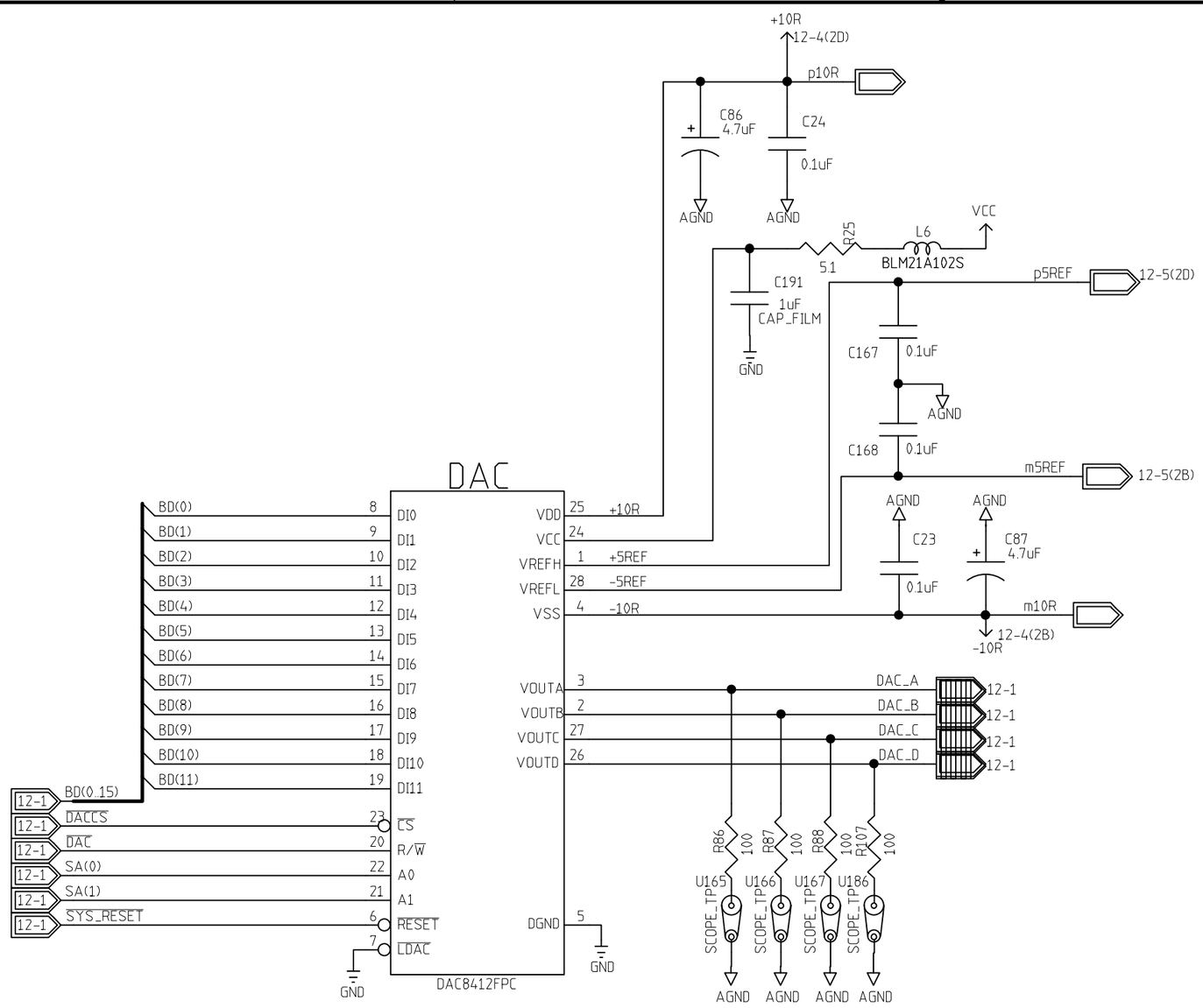

REVISIONS			
REV	DESCRIPTION	DATE	APPROVED
	UNDER DEVELOPMENT	1-19-99	

	NAME	DATE
ORIGINATOR	MERLE HALDEMAN	11/17/98
DRAWN	BRUCE MERKEL	11/17/98
CHECKED	TOM CRENNA	1/8/99
APPROVED		

FERMILAB PPD/ ETT/ ES CDMS(E-891)
ZIP MODULE
DAC'S_1_TO_7

SIZE	FSCM NO.	DWG. NO.	REV
B			1
SCALE		SHEET 12-6	

U35

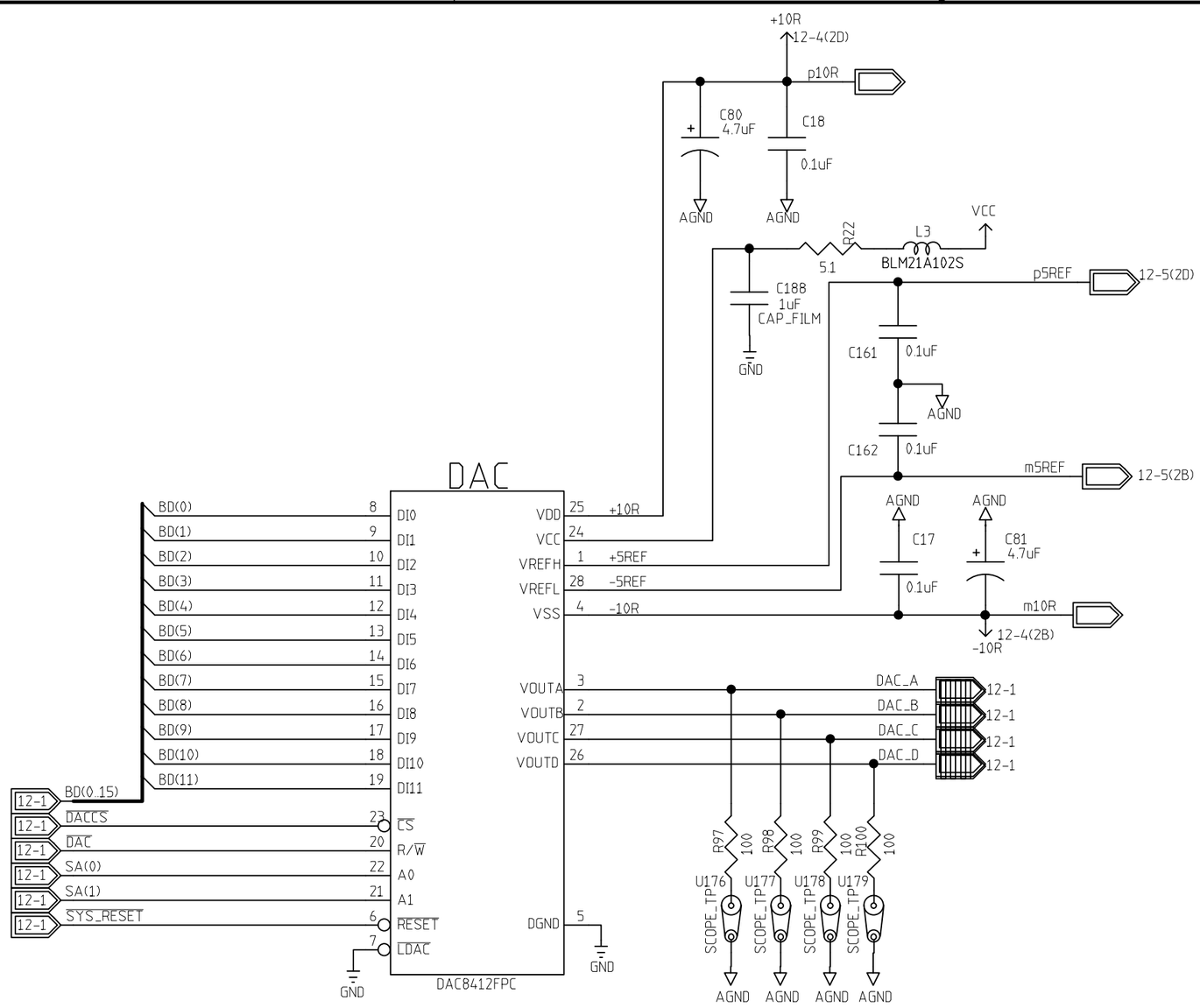

REVISIONS			
REV	DESCRIPTION	DATE	APPROVED
	UNDER DEVELOPMENT	1-19-99	

	NAME	DATE
ORIGINATOR	MERLE HALDEMAN	11/17/98
DRAWN	BRUCE MERKEL	11/17/98
CHECKED	TOM CRENNA	1/8/99
APPROVED		

FERMILAB PPD/ ETT/ ES CDMS(E-891)
ZIP MODULE
DAC'S_1_TO_7

SIZE	FSCM NO.	DWG. NO.	REV
B			1
SCALE		SHEET 12-6	

U36

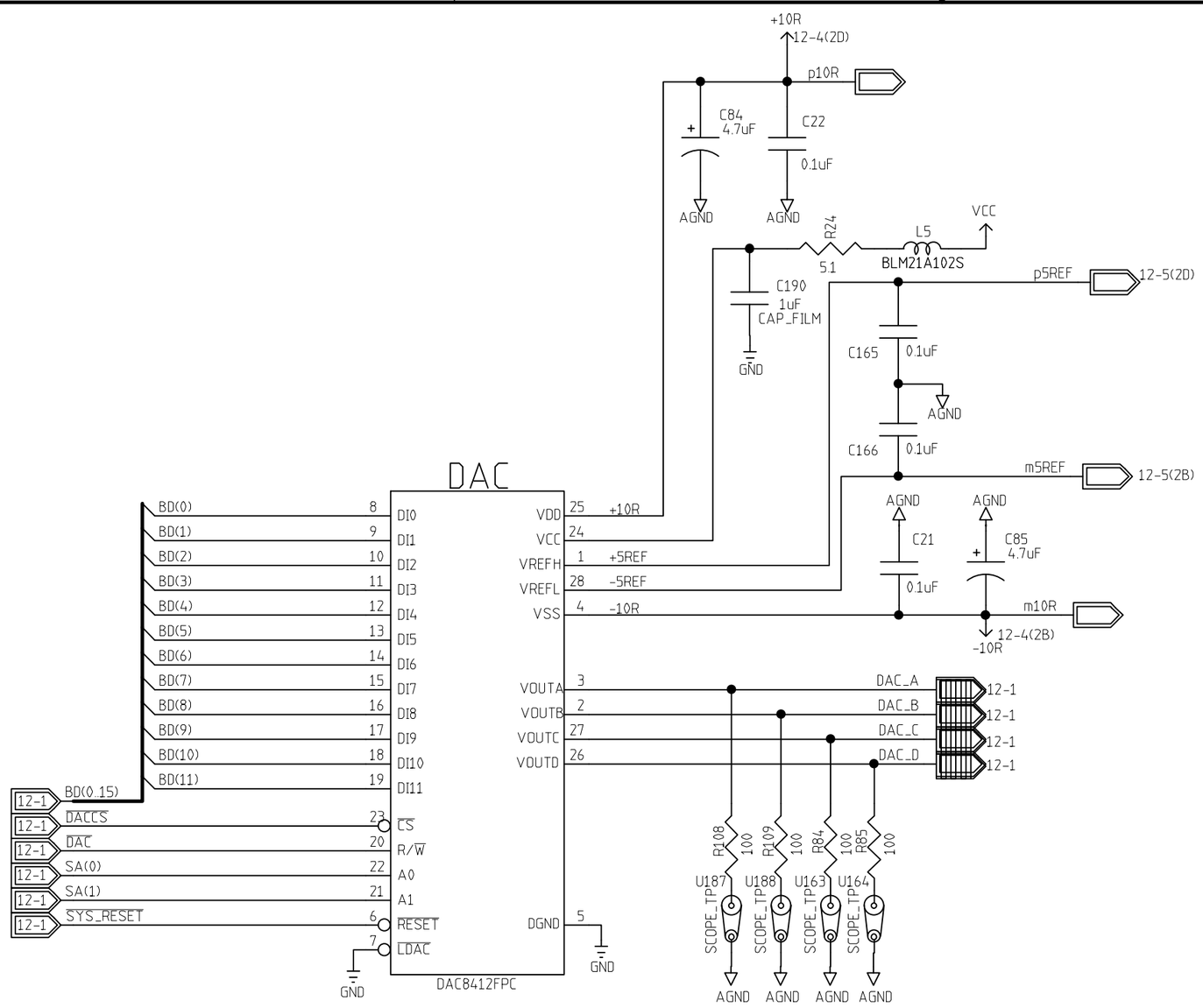

REVISIONS			
REV	DESCRIPTION	DATE	APPROVED
	UNDER DEVELOPMENT	1-19-99	

	NAME	DATE
ORIGINATOR	MERLE HALDEMAN	11/17/98
DRAWN	BRUCE MERKEL	11/17/98
CHECKED	TOM CRENNA	1/8/99
APPROVED		

FERMILAB PPD/ ETT/ ES CDMS(E-891)
ZIP MODULE
DAC'S_1_TO_7

SIZE	FSCM NO.	DWG. NO.	REV
B			1
SCALE		SHEET 12-6	

REVISIONS			
REV	DESCRIPTION	DATE	APPROVED

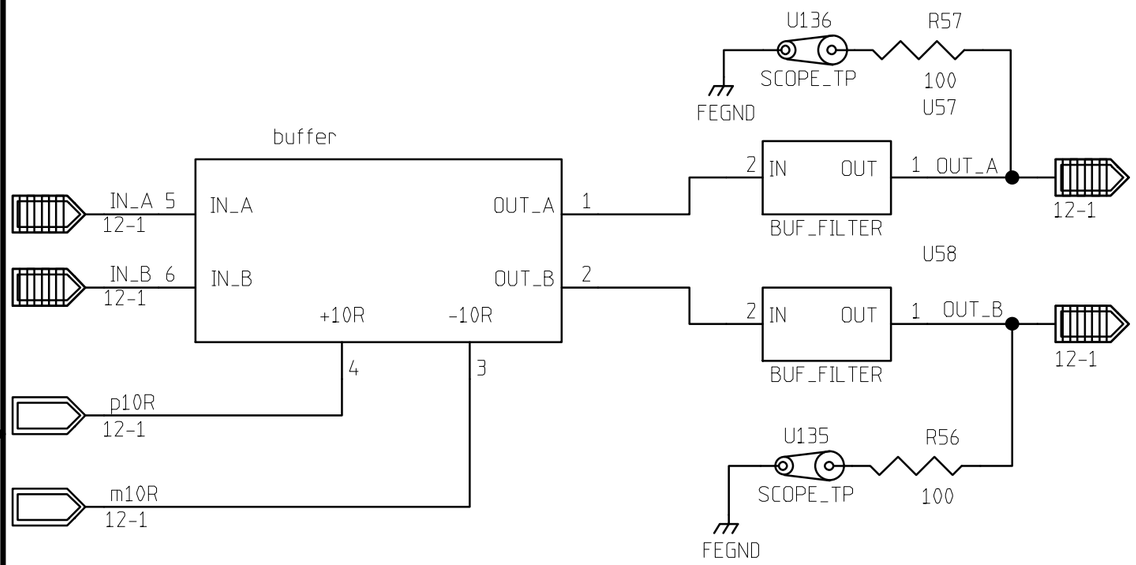

	NAME	DATE
ORIGINATOR	MERLE HALDEMAN	11/17/98
DRAWN	BRUCE MERKEL	12/10/98
CHECKED	TOM CRENNA	1/8/99
APPROVED		

FERMILAB PPD/ETT/ES CDMS (E-891)
ZIP MODULE
U42 DUAL NON_INVERTING BUFFER BLOCK

SIZE	FSCM NO.	DWG. NO.	REV
A			1

SCALE | SHEET 12-7

REVISIONS			
REV	DESCRIPTION	DATE	APPROVED

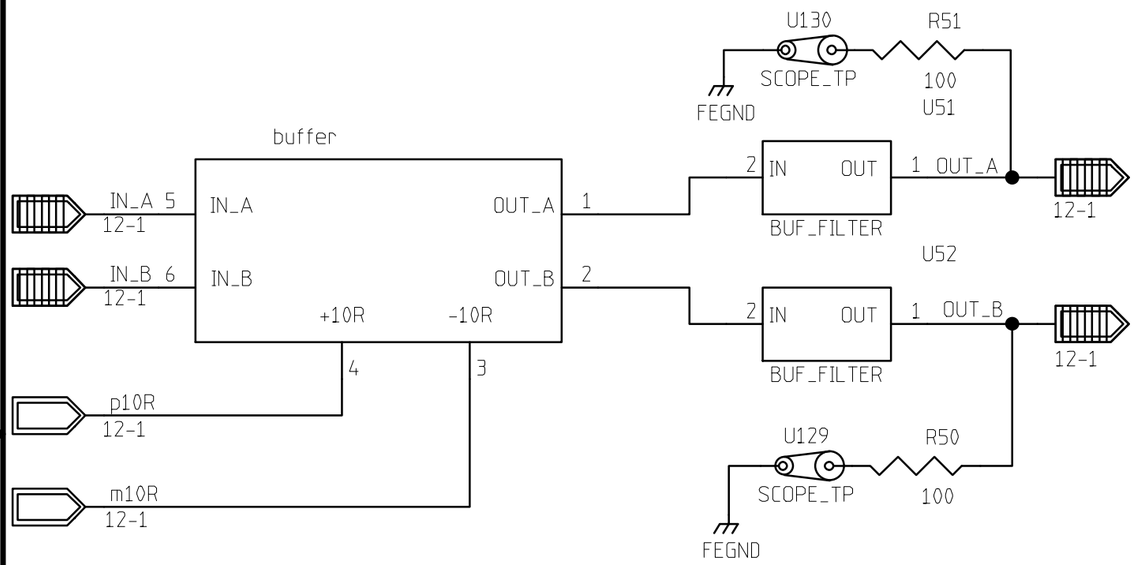

	NAME	DATE
ORIGINATOR	MERLE HALDEMAN	11/17/98
DRAWN	BRUCE MERKEL	12/10/98
CHECKED	TOM CRENNA	1/8/99
APPROVED		

FERMILAB PPD/ETT/ES CDMS (E-891)
ZIP MODULE
U39 DUAL NON_INVERTING BUFFER BLOCK

SIZE	FSCM NO.	DWG. NO.	REV
A			1

SCALE | SHEET 12-7

REVISIONS			
REV	DESCRIPTION	DATE	APPROVED

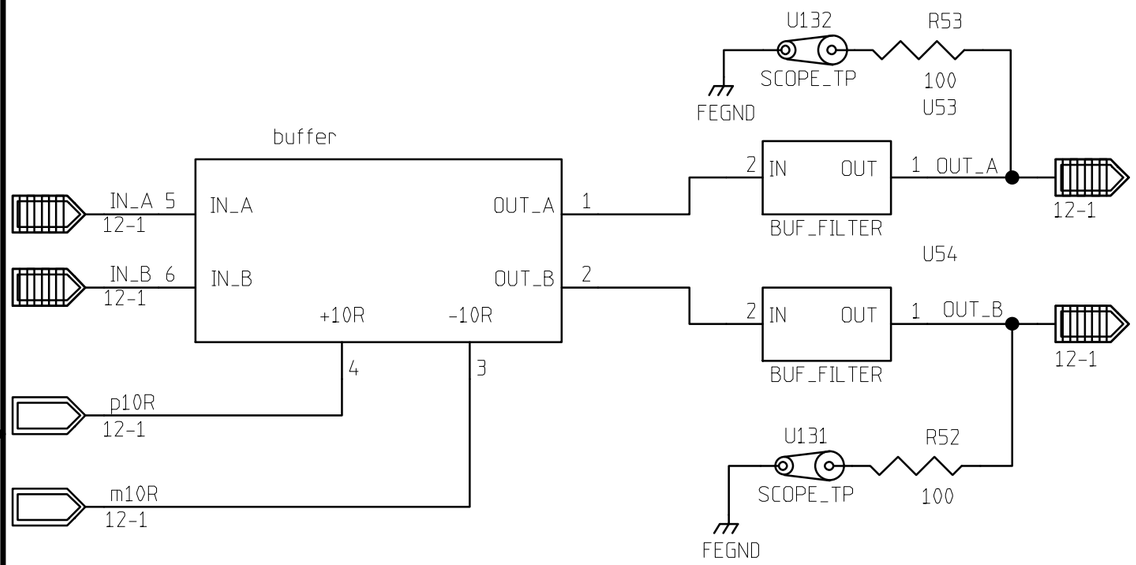

	NAME	DATE
ORIGINATOR	MERLE HALDEMAN	11/17/98
DRAWN	BRUCE MERKEL	12/10/98
CHECKED	TOM CRENNA	1/8/99
APPROVED		

FERMILAB PPD/ETT/ES CDMS (E-891)
ZIP MODULE
U40 DUAL NON_INVERTING BUFFER BLOCK

SIZE	FSCM NO.	DWG. NO.	REV
A			1

SCALE | SHEET 12-7

REVISIONS			
REV	DESCRIPTION	DATE	APPROVED

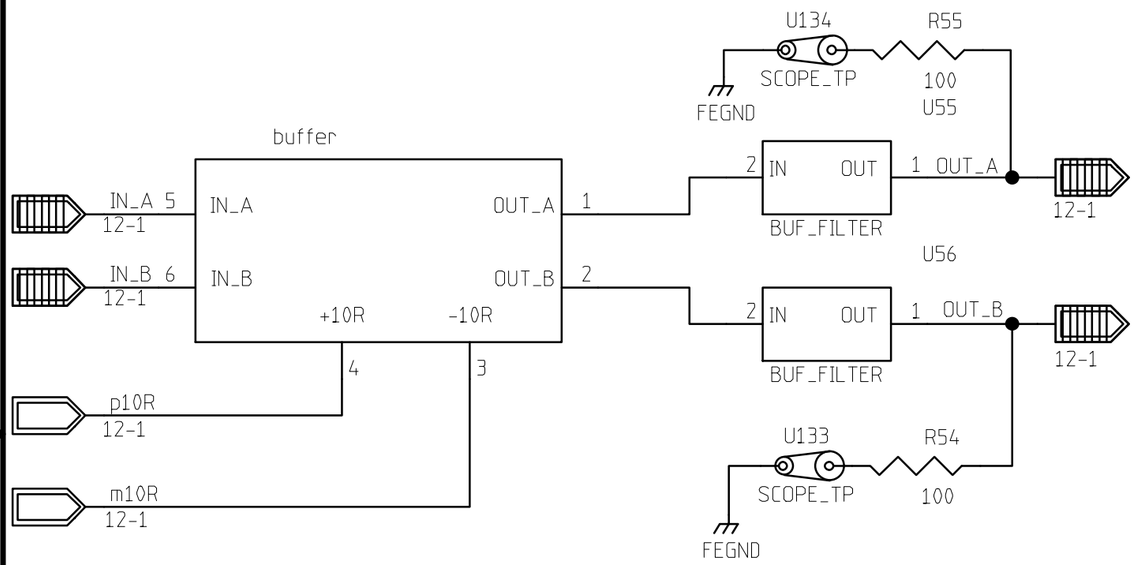

	NAME	DATE
ORIGINATOR	MERLE HALDEMAN	11/17/98
DRAWN	BRUCE MERKEL	12/10/98
CHECKED	TOM CRENNA	1/8/99
APPROVED		

FERMILAB PPD/ETT/ES CDMS (E-891)
ZIP MODULE
U41 DUAL NON_INVERTING BUFFER BLOCK

SIZE	FSCM NO.	DWG. NO.	REV
A			1

SCALE | SHEET 12-7

REVISIONS			
REV	DESCRIPTION	DATE	APPROVED

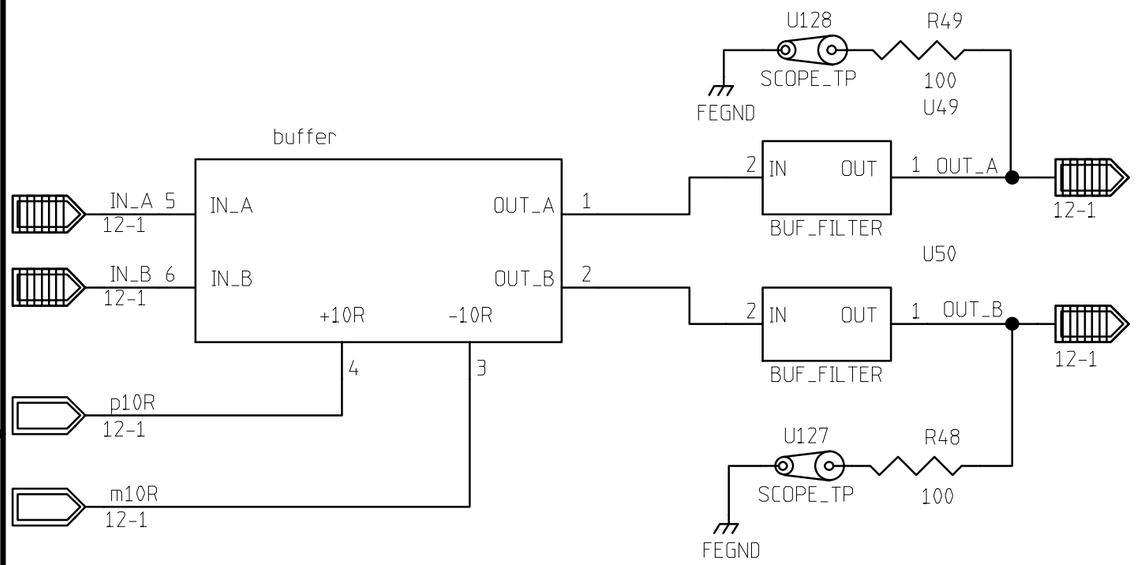

	NAME	DATE
ORIGINATOR	MERLE HALDEMAN	11/17/98
DRAWN	BRUCE MERKEL	12/10/98
CHECKED	TOM CRENNA	1/8/99
APPROVED		

FERMILAB PPD/ETT/ES CDMS (E-891)
ZIP MODULE
U38 DUAL NON_INVERTING BUFFER BLOCK

SIZE	FSCM NO.	DWG. NO.	REV
A			1

SCALE | SHEET 12-7

REVISIONS			
REV	DESCRIPTION	DATE	APPROVED

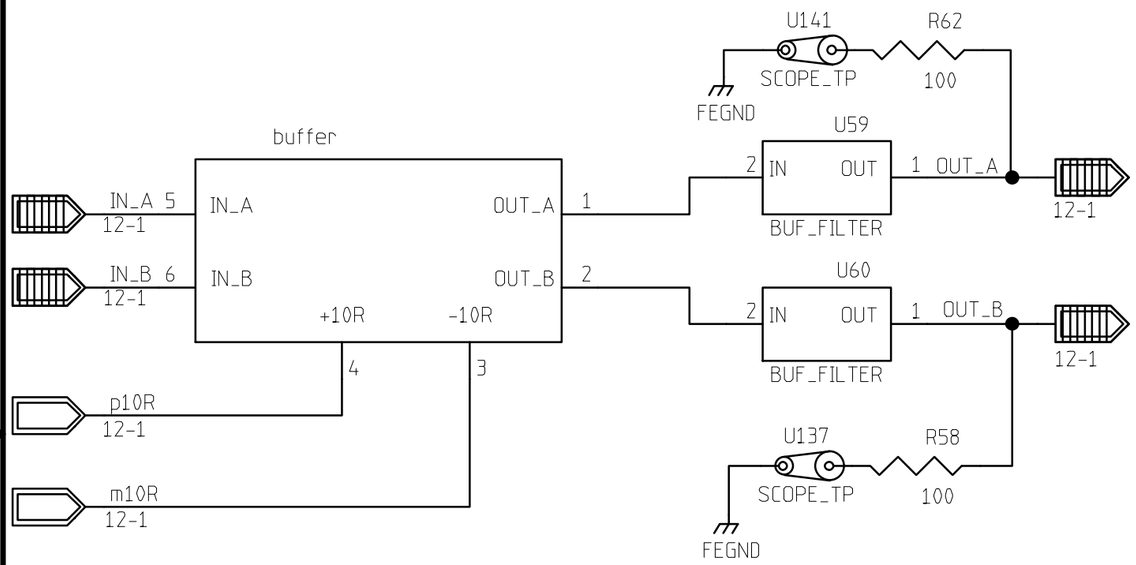

	NAME	DATE
ORIGINATOR	MERLE HALDEMAN	11/17/98
DRAWN	BRUCE MERKEL	12/10/98
CHECKED	TOM CRENNA	1/8/99
APPROVED		

FERMILAB PPD/ETT/ES CDMS (E-891)
ZIP MODULE
U43 DUAL NON_INVERTING BUFFER BLOCK

SIZE	FSCM NO.	DWG. NO.	REV
A			1

SCALE		SHEET 12-7

REVISIONS			
REV	DESCRIPTION	DATE	APPROVED

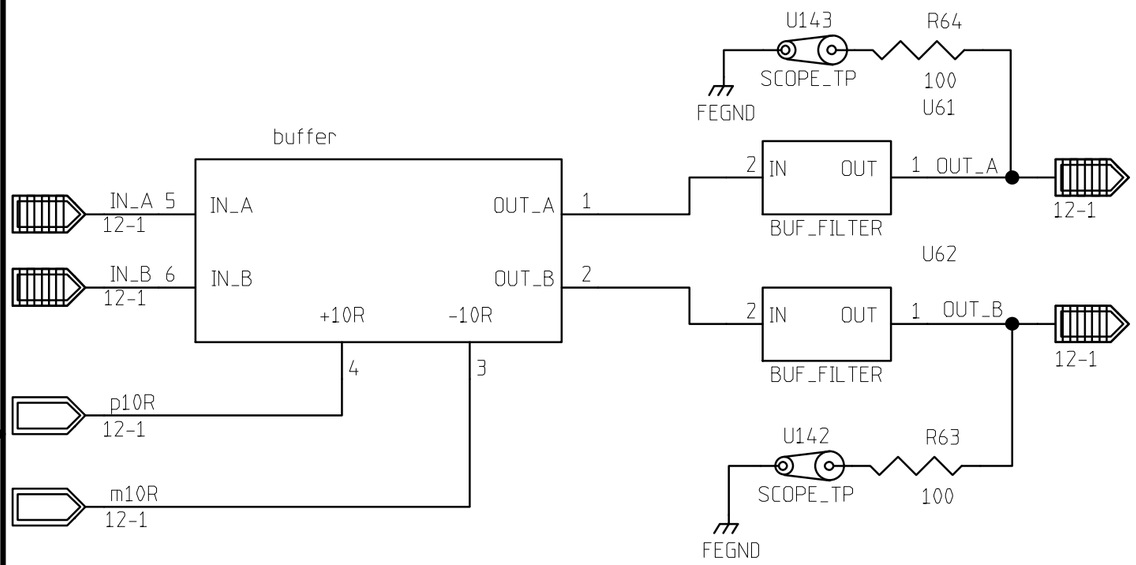

	NAME	DATE
ORIGINATOR	MERLE HALDEMAN	11/17/98
DRAWN	BRUCE MERKEL	12/10/98
CHECKED	TOM CRENNA	1/8/99
APPROVED		

FERMILAB PPD/ETT/ES CDMS (E-891)
ZIP MODULE
U44 DUAL NON_INVERTING BUFFER BLOCK

SIZE	FSCM NO.	DWG. NO.	REV
A			1

SCALE | SHEET 12-7

REVISIONS			
REV	DESCRIPTION	DATE	APPROVED

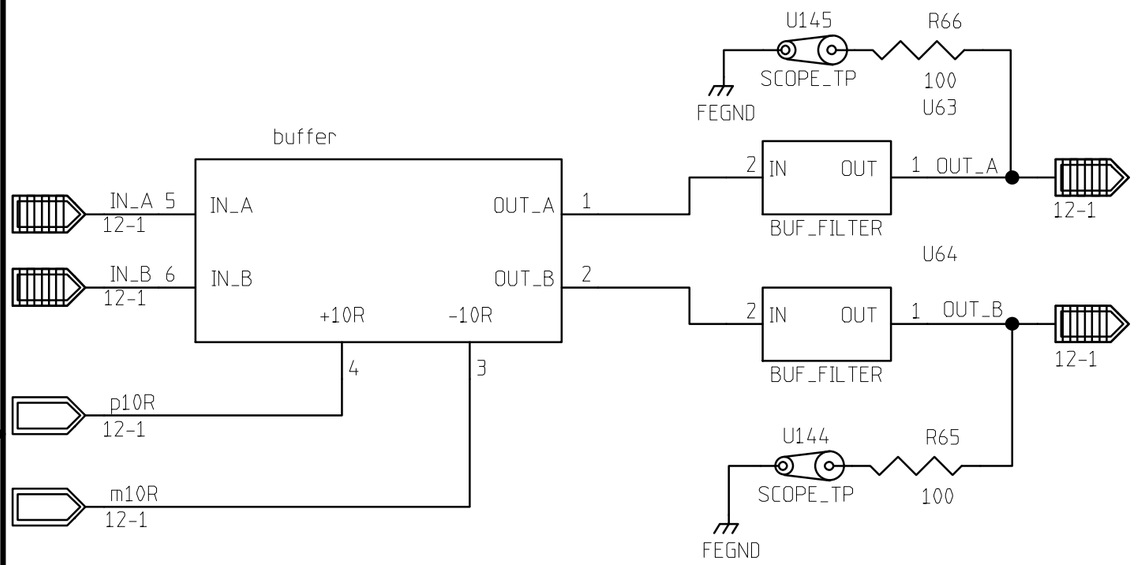

	NAME	DATE
ORIGINATOR	MERLE HALDEMAN	11/17/98
DRAWN	BRUCE MERKEL	12/10/98
CHECKED	TOM CRENNA	1/8/99
APPROVED		

FERMILAB PPD/ETT/ES CDMS (E-891)
ZIP MODULE
U45 DUAL NON_INVERTING BUFFER BLOCK

SIZE	FSCM NO.	DWG. NO.	REV
A			1

SCALE | SHEET 12-7

REVISIONS			
REV	DESCRIPTION	DATE	APPROVED

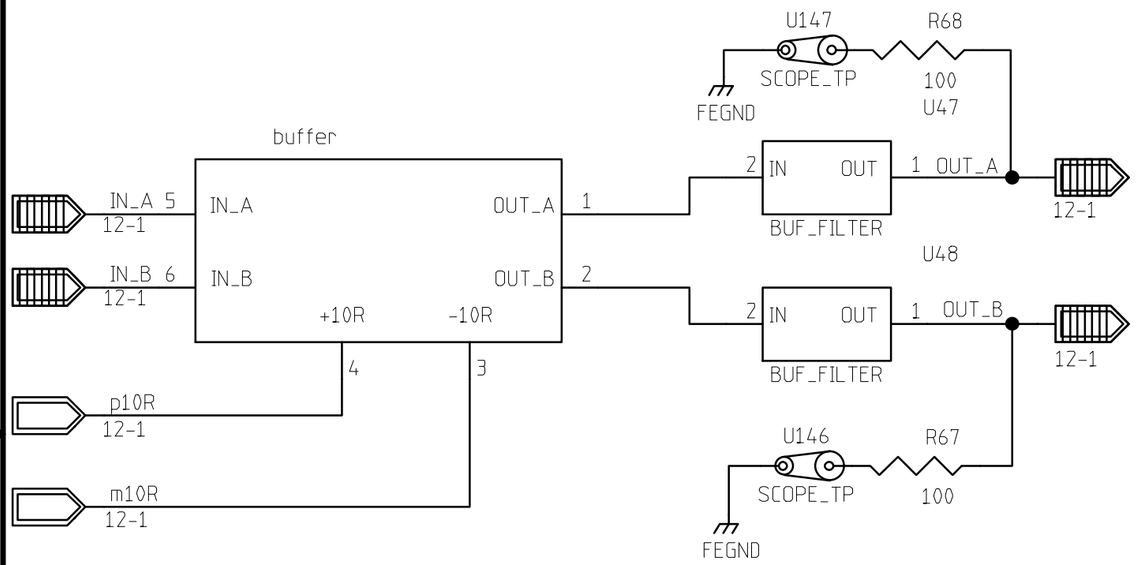

	NAME	DATE
ORIGINATOR	MERLE HALDEMAN	11/17/98
DRAWN	BRUCE MERKEL	12/10/98
CHECKED	TOM CRENNA	1/8/99
APPROVED		

FERMILAB PPD/ETT/ES CDMS (E-891)
ZIP MODULE
U46 DUAL NON_INVERTING BUFFER BLOCK

SIZE	FSCM NO.	DWG. NO.	REV
A			1

SCALE | SHEET 12-7

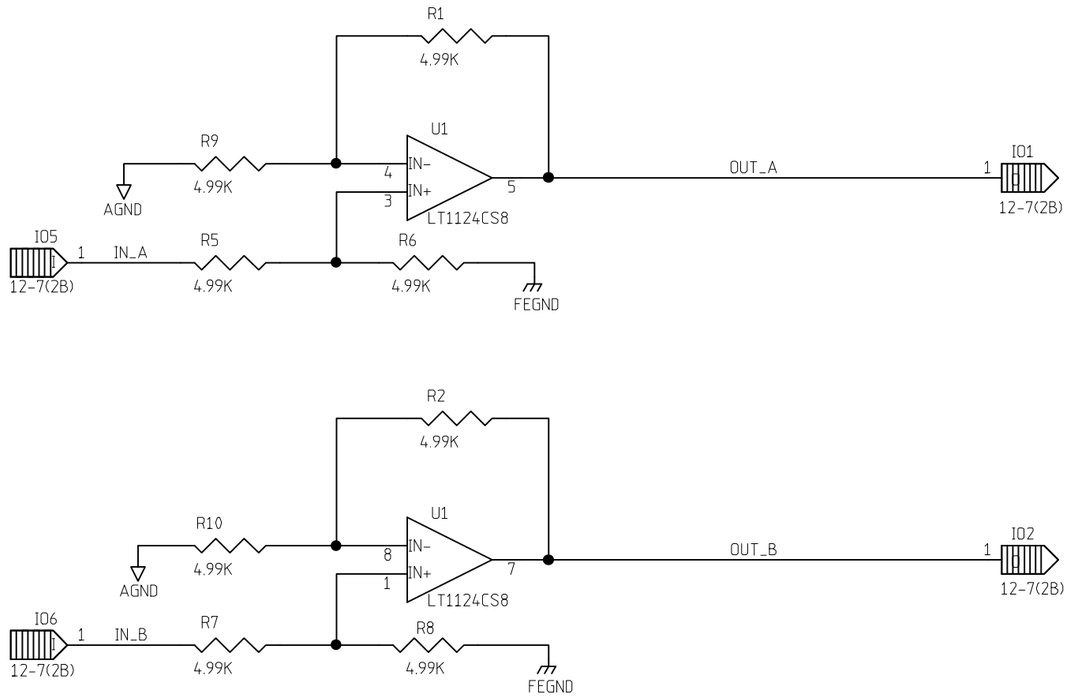

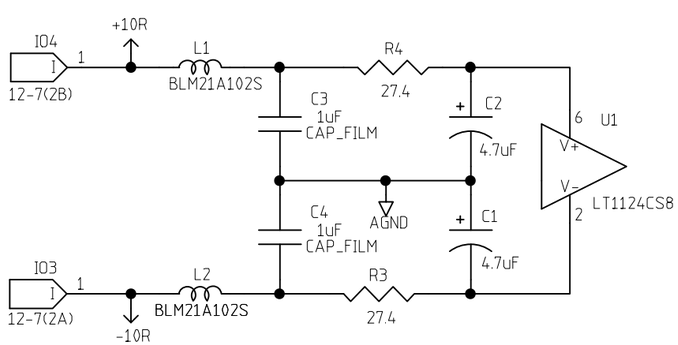

NOTE: Q_BIAS BUFFER
REPLACE RESISTORS R1, R2, R6, & R8
WITH 10K OHM RESISTORS
ALSO NOTE THAT POWER SUPPLIED TO
THIS BUFFER IS +/- 15 VOLTS

REVISIONS

REV	DESCRIPTION	DATE	APPROVED
1	REVISED FOR 2 x GAIN ON Q_BIAS BUFFER	5/4/00	B.MERKEL

	NAME	DATE
ORIGINATOR	MERLE HALDEMAN	11/17/98
DRAWN	BRUCE MERKEL	11/17/98
CHECKED	TOM CRENNA	1/8/99
APPROVED		

FERMILAB PPD/ETT/ES CDMS (E-891)
ZIP MODULE
DUAL NON-INVERTING BUFFERS

SIZE	FSCM NO.	DWG. NO.	REV
B			

SCALE | SHEET 12-8

REVISIONS			
REV	DESCRIPTION	DATE	APPROVED

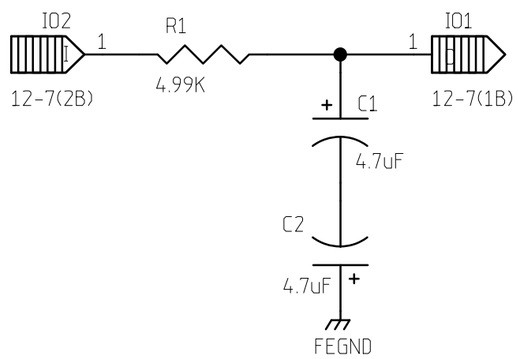

	NAME	DATE
ORIGINATOR	MERLE HALDEMAN	12/09/98
DRAWN	BRUCE MERKEL	12/09/98
CHECKED	TOM CRENNA	1/8/99
APPROVED		

FERMILAB PPD/ETT/ES CDMS (E-891)
ZIP MODULE
BUFFER FILTER

SIZE	FSCM NO.	DWG. NO.	REV
A			

SCALE		SHEET 12-9

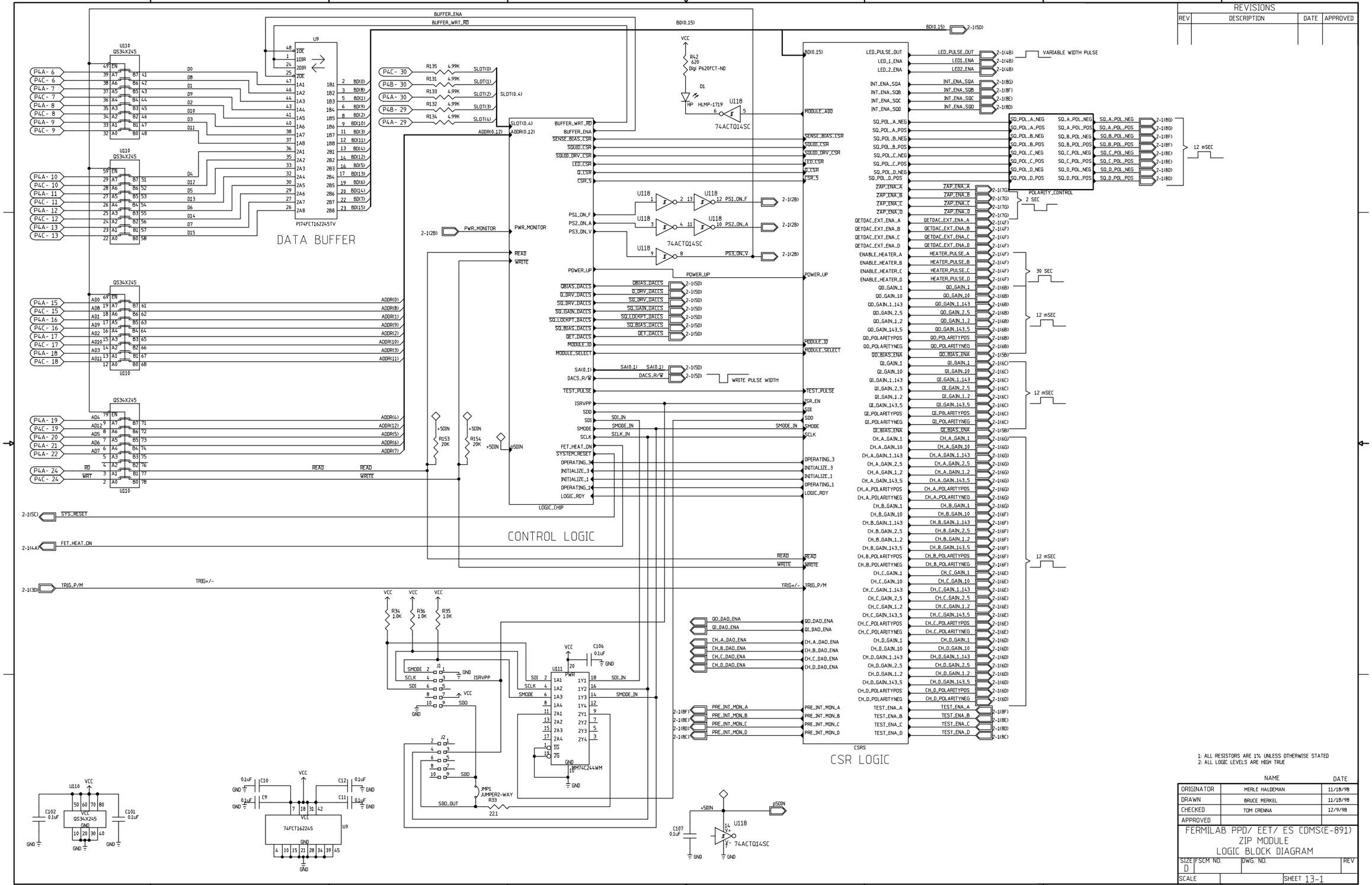

REVISIONS			
REV	DESCRIPTION	DATE	APPROVED

1: ALL RESISTORS ARE 1% UNLESS OTHERWISE STATED
2: ALL LOGIC LEVELS ARE HIGH TRUE

	NAME	DATE
ORIGINATOR	MERLE HALDEMAN	11/18/98
DRAWN	BRUCE MERKEL	11/18/98
CHECKED	TOM CRENNA	12/9/98
APPROVED		

FERMILAB PPD/ EET/ ES CDMS(E-891)
ZIP MODULE
LOGIC BLOCK DIAGRAM

SIZE	FSCM NO.	DWG. NO.	REV
D			
SCALE		SHEET 13-1	

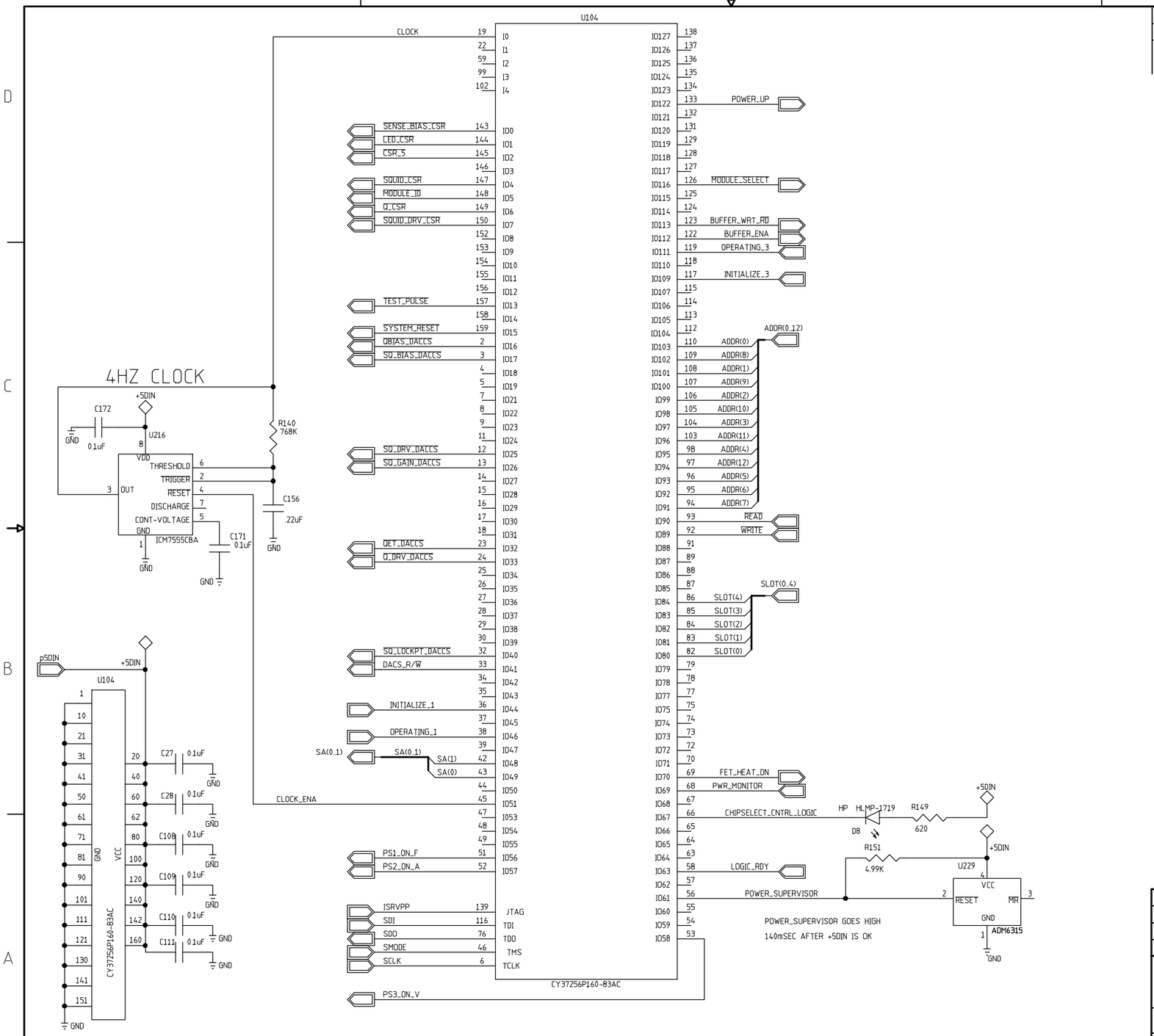

REVISIONS			
REV	DESCRIPTION	DATE	APPROVED
1	VERSION 1 REVISIONS	10/19/99	BDM
2	VERSION 2 REVISIONS	01/03/01	BDM

1: ALL RESISTORS ARE 1% UNLESS OTHERWISE STATED
2: ALL LOGIC LEVELS ARE HIGH TRUE

	NAME	DATE
ORIGINATOR	MERLE HALDEMAN	9/23/99
DRAWN	BRUCE MERKEL	1/7/00
CHECKED		
APPROVED		

FERMILAB PPD/ EET/ ES CDMS(E-891)
ZIP MODULE
CONTROL LOGIC

SIZE	FSCM NO.	DWG. NO.	REV
C			2
SCALE		SHEET 13-3	

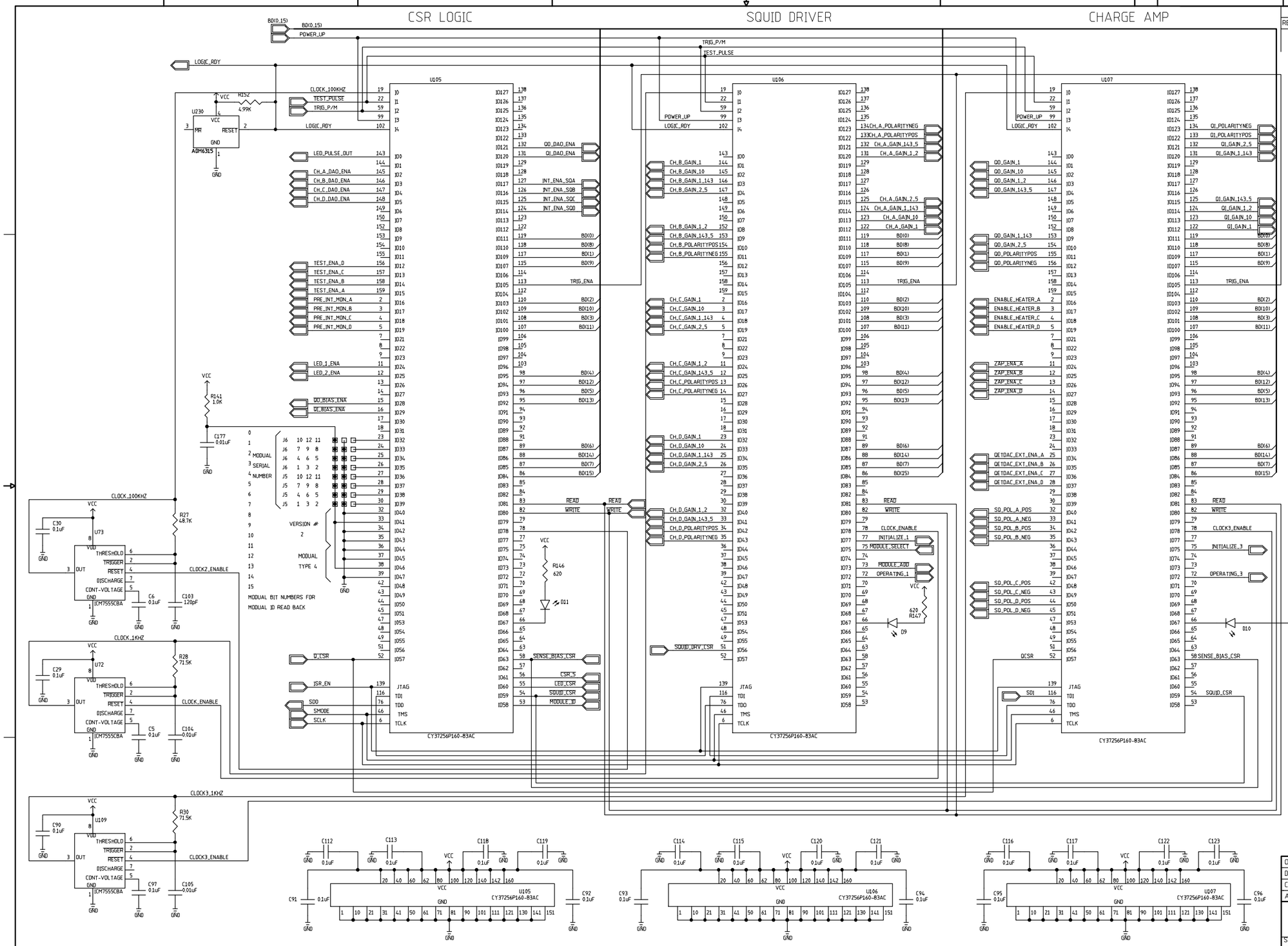

1: ALL RESISTORS ARE 1% UNLESS OTHERWISE STATED
2: ALL LOGIC LEVELS ARE HIGH TRUE

	NAME	DATE
ORIGINATOR	MERLE HALDEMAN	11/18/98
DRAWN	BRUCE MERKEL	11/18/98
CHECKED	TOM CRENNA	12/9/98
APPROVED		

FERMILAB PPD/ EET/ ES CDMS(E-891)
ZIP MODULE
CSR LOGIC

SIZE	FSCM NO.	DWG. NO.	REV
D			1

SCALE | SHEET 13-4

REVISIONS

REV	DESCRIPTION	DATE	APPROVED
1	REVISED TO ADD AUTO ZERO TO DRIVERS	5 5 00	B.MERKEL

REVISIONS			
REV	DESCRIPTION	DATE	APPROVED
0	UNDER DEVELOPMENT	1-20-99	

11mSEC ONE SHOT

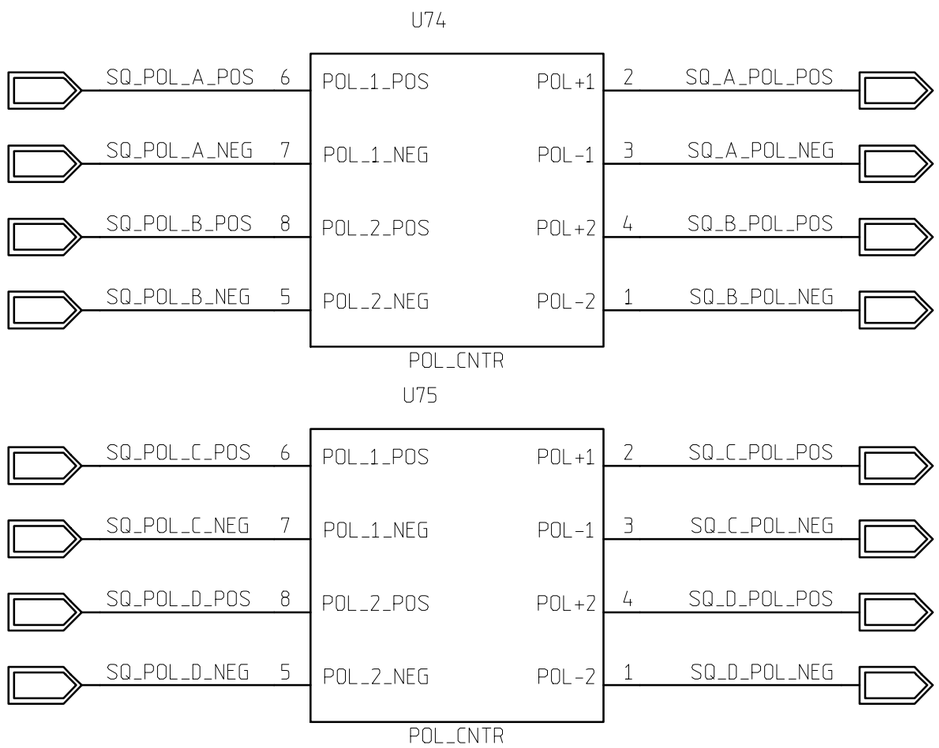

	NAME	DATE
ORIGINATOR	MERLE HALDEMAN	11/18/98
DRAWN	BRUCE MERKEL	11/18/98
CHECKED	TOM CRENNA	1/8/99
APPROVED		

FERMILAB PPD/ETT/ES CDMS (E-891)
ZIP MODULE
POLARITY CONTROL

SIZE	FSCM NO.	DWG. NO.	REV
A			1

SCALE | SHEET 13-5

REVISIONS			
REV	DESCRIPTION	DATE	APPROVED
0	UNDER DEVELOPMENT	1-20-99	

11mSEC PULSE

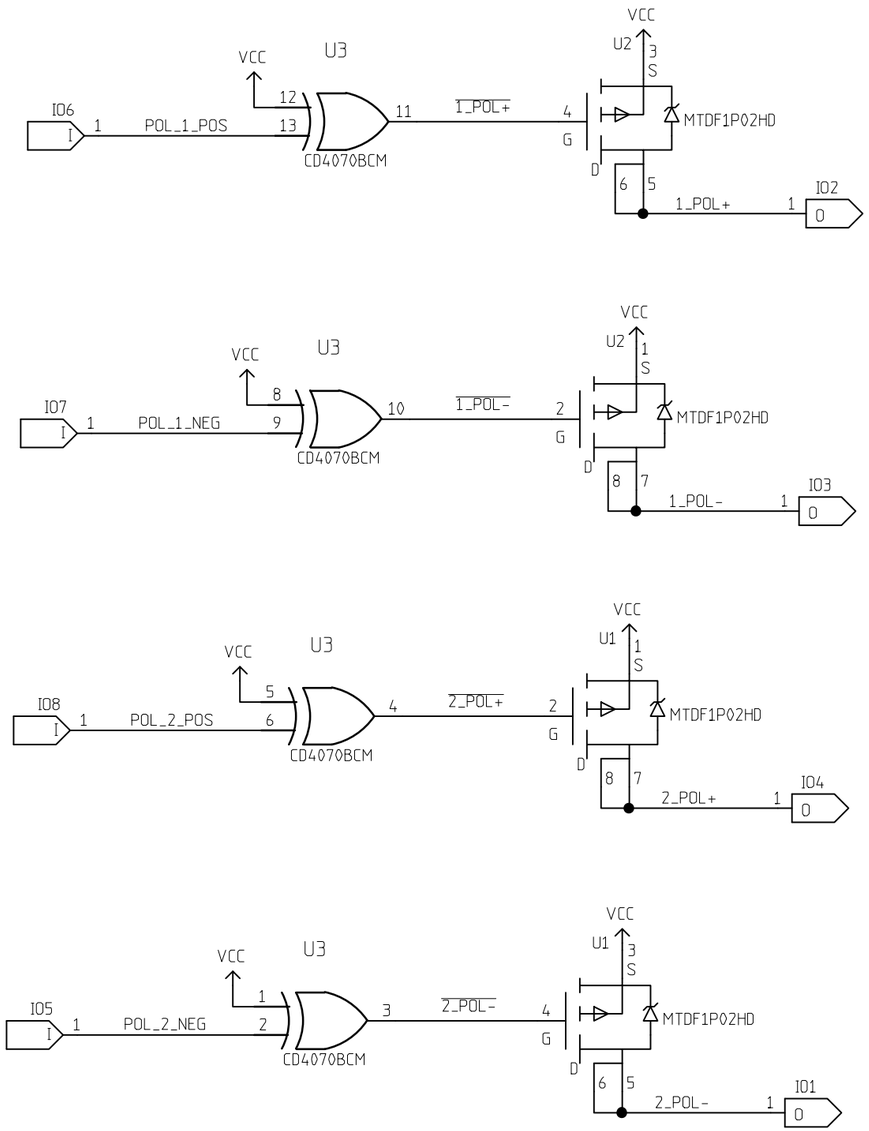

	NAME	DATE
ORIGINATOR	MERLE HALDEMAN	11/18/98
DRAWN	BRUCE MERKEL	11/18/98
CHECKED	TOM CRENNA	1/8/99
APPROVED		

FERMILAB PPD/ETT/ES CDMS (E-891)
ZIP MODULE
POLARITY CONTROL

SIZE	FSCM NO.	DWG. NO.	REV
B			1
SCALE		SHEET 13-6	

REVISIONS			
REV	DESCRIPTION	DATE	APPROVED
0	UNDERDEVELOPMENT	1/19/99	
2	REPLACED NOSEY 7905 REGULATOR	11/29/00	BDM

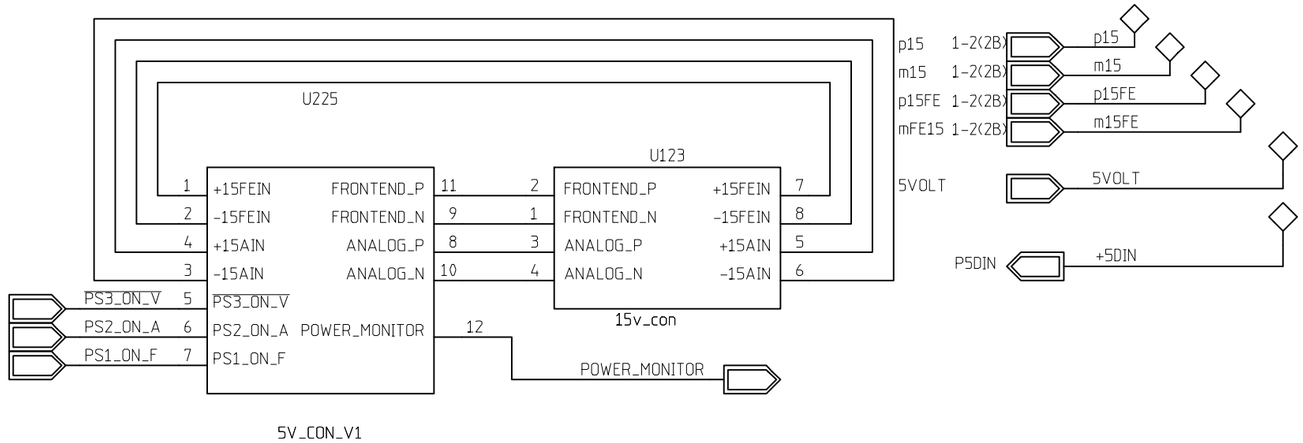

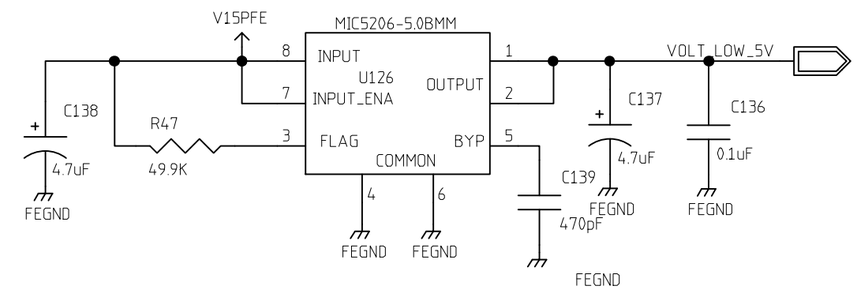

5 VOLT SECTION

15 VOLT SECTION

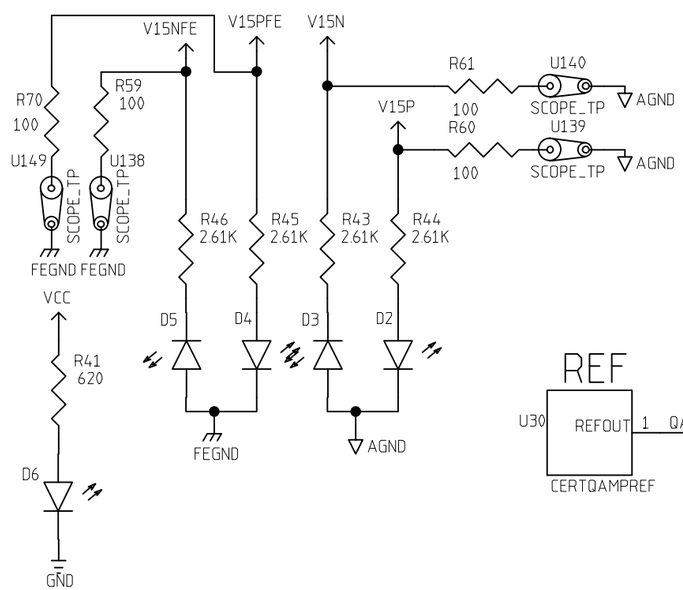

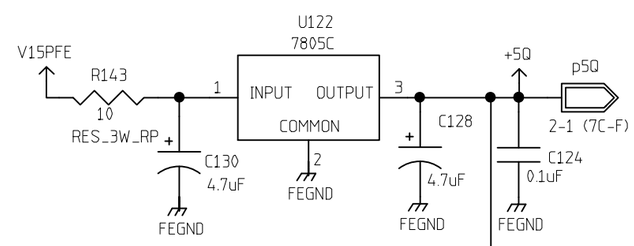

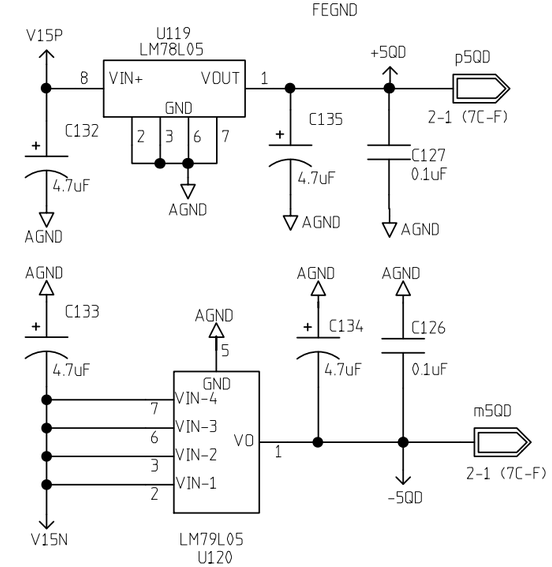

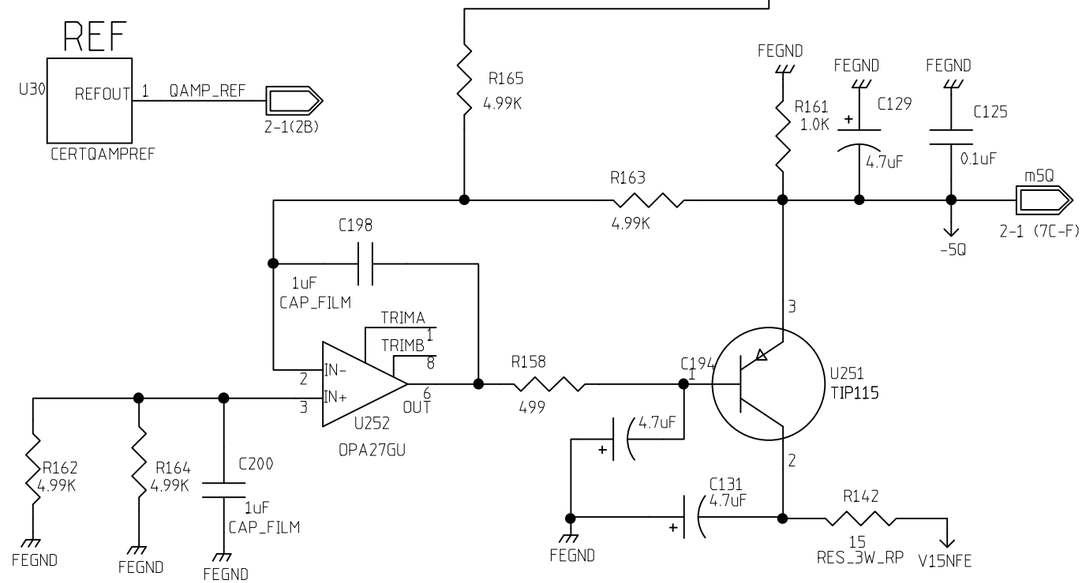

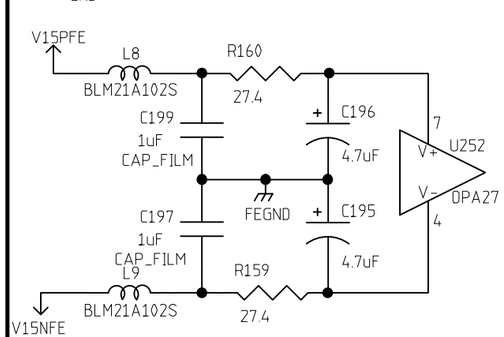

1: ALL RESISTORS ARE 1% UNLESS OTHERWISE STATED
2: ALL LOGIC LEVELS ARE HIGH TRUE

	NAME	DATE
ORIGINATOR	MERLE HALDEMAN	11/18/98
DRAWN	BRUCE MERKEL	11/18/98
CHECKED	TOM CRENNA	1/8/99
APPROVED		

FERMILAB PPD/ETT/ES CDMS (E-891)
ZIP MODULE
POWER CONTROL

SIZE	FSCM NO.	DWG. NO.	REV
B			2
SCALE		SHEET 14-1	

POWER ON SEQUENCER

REVISIONS			
REV	DESCRIPTION	DATE	APPROVED

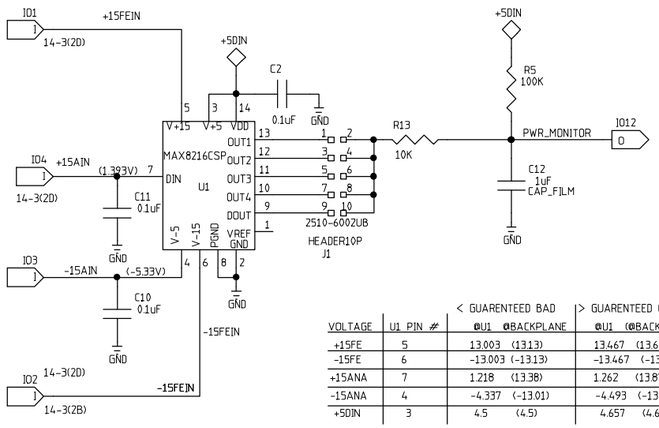

VOLTAGE	U1 PIN #	< GUARENTEED BAD @U1 @BACKPLANE	> GUARENTEED GOOD @U1 (@BACKPLANE)	EXPECTED MEASURED @U1 (@BACKPLANE)
+15FE	5	13.003 (13.13)	13.467 (13.6)	14.82 (15)
-15FE	6	-13.003 (-13.13)	-13.467 (-13.6)	-14.84 (-15)
+15ANA	7	1.218 (13.38)	1.262 (13.87)	1.37 (15)
-15ANA	4	-4.337 (-13.01)	-4.493 (-13.47)	-5.002 (-15)
+5DIN	3	4.5 (4.5)	4.657 (4.657)	5.0 (5.0)

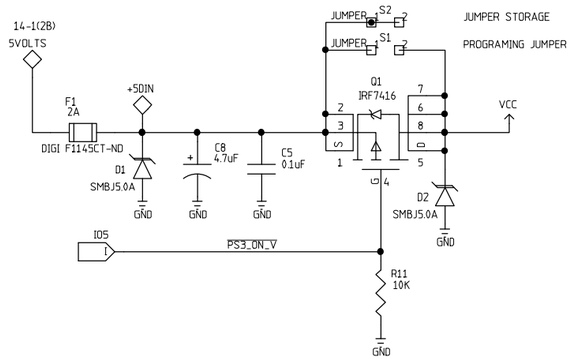

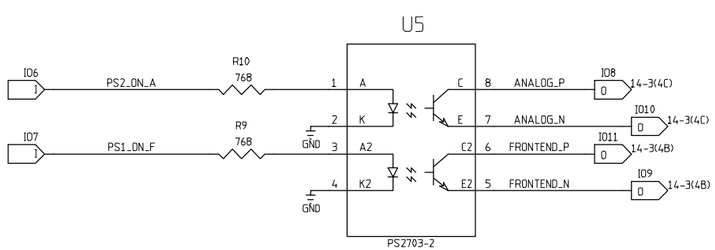

	NAME	DATE
ORIGINATOR	MERLE HALDEMAN	11/18/98
DRAWN	BRUCE MERKEL	11/18/98
CHECKED	TOM CRENNA	1/8/99
APPROVED		

FERMILAB PPD/ETT/ES CDMS (E-891)
ZIP MODULE
5 VOLT SECTION

SIZE	FSCM NO.	DWG. NO.	REV
C			1
SCALE		SHEET 14-2	

POWER ON SEQUENCER CONTINUED

REVISIONS			
REV	DESCRIPTION	DATE	APPROVED

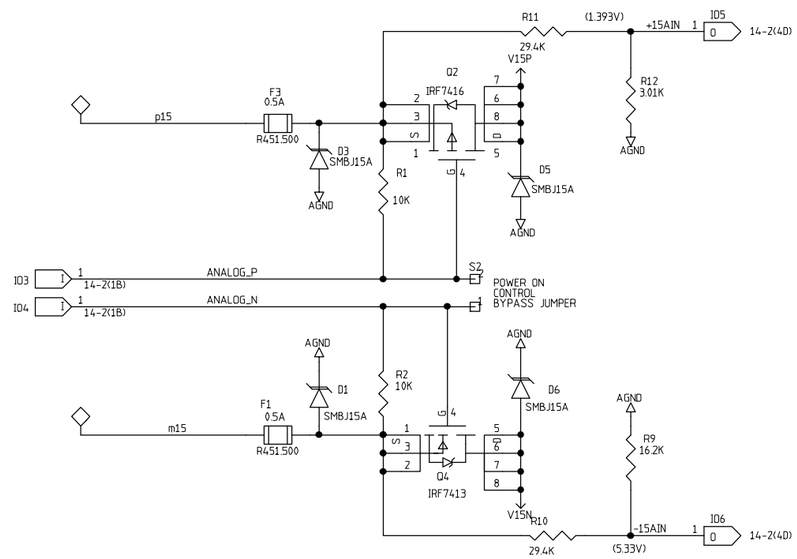

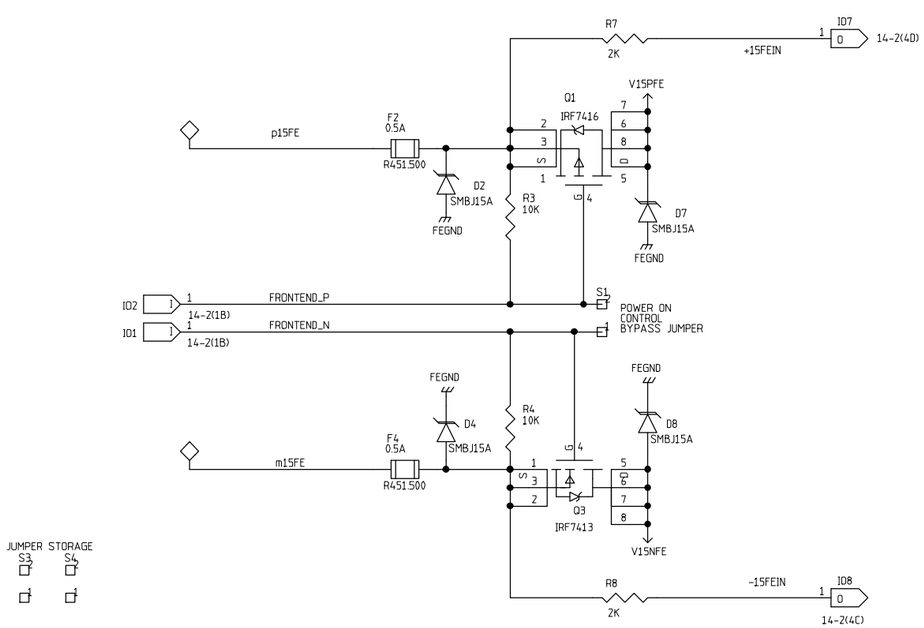

	NAME	DATE
ORIGINATOR	MERLE HALDEMAN	11/18/98
DRAWN	BRUCE MERKEL	11/18/98
CHECKED	TOM CRENNA	1/8/99
APPROVED		

FERMILAB PPD/ETT/ES CDMS (E-891)
ZIP MODULE
15 VOLT SECTION

SIZE	FSCM NO.	DWG. NO.	REV
C			1
SCALE		SHEET 14-3	

REVISIONS			
REV	DESCRIPTION	DATE	APPROVED

10 VOLT REFERENCE

10 VOLT BUFFER & NOISE FILTER

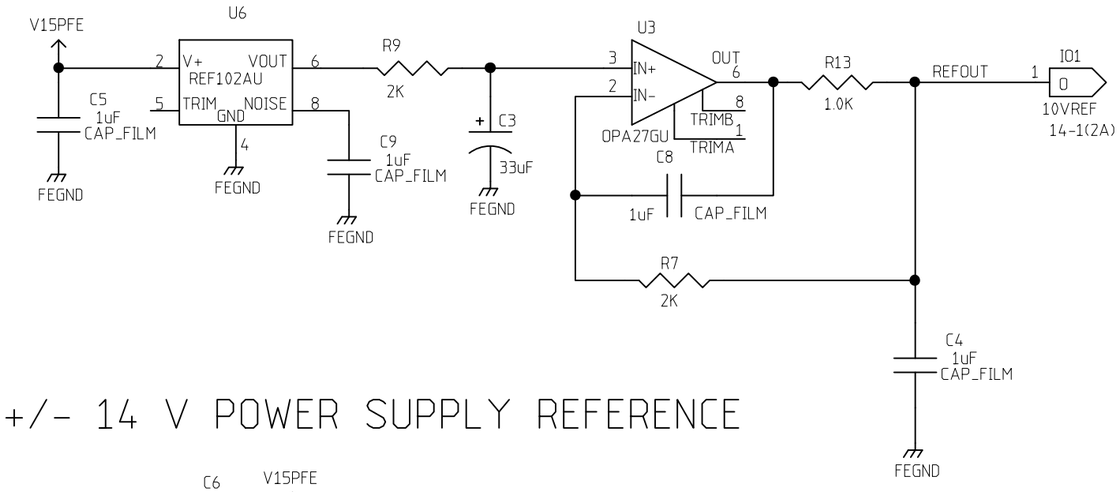

+/- 14 V POWER SUPPLY REFERENCE

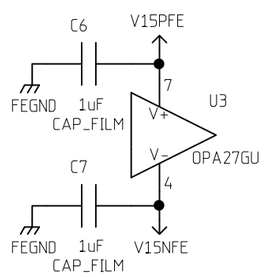

	NAME	DATE
ORIGINATOR	MERLE HALDEMAN	11/18/98
DRAWN	BRUCE MERKEL	11/18/98
CHECKED	TOM CRENNA	1/8/99
APPROVED		

FERMILAB PPD/ETT/ES CDMS (E-891)
ZIP MODULE
Q AMP REFERENCE

SIZE	FSCM NO.	DWG. NO.	REV
B			

SCALE | SHEET 14-4

REV.	DESCRIPTION	DRAWN	DATE
		APPD.	DATE
A	NUMEROUS CHANGES	N.C.	8/31/99

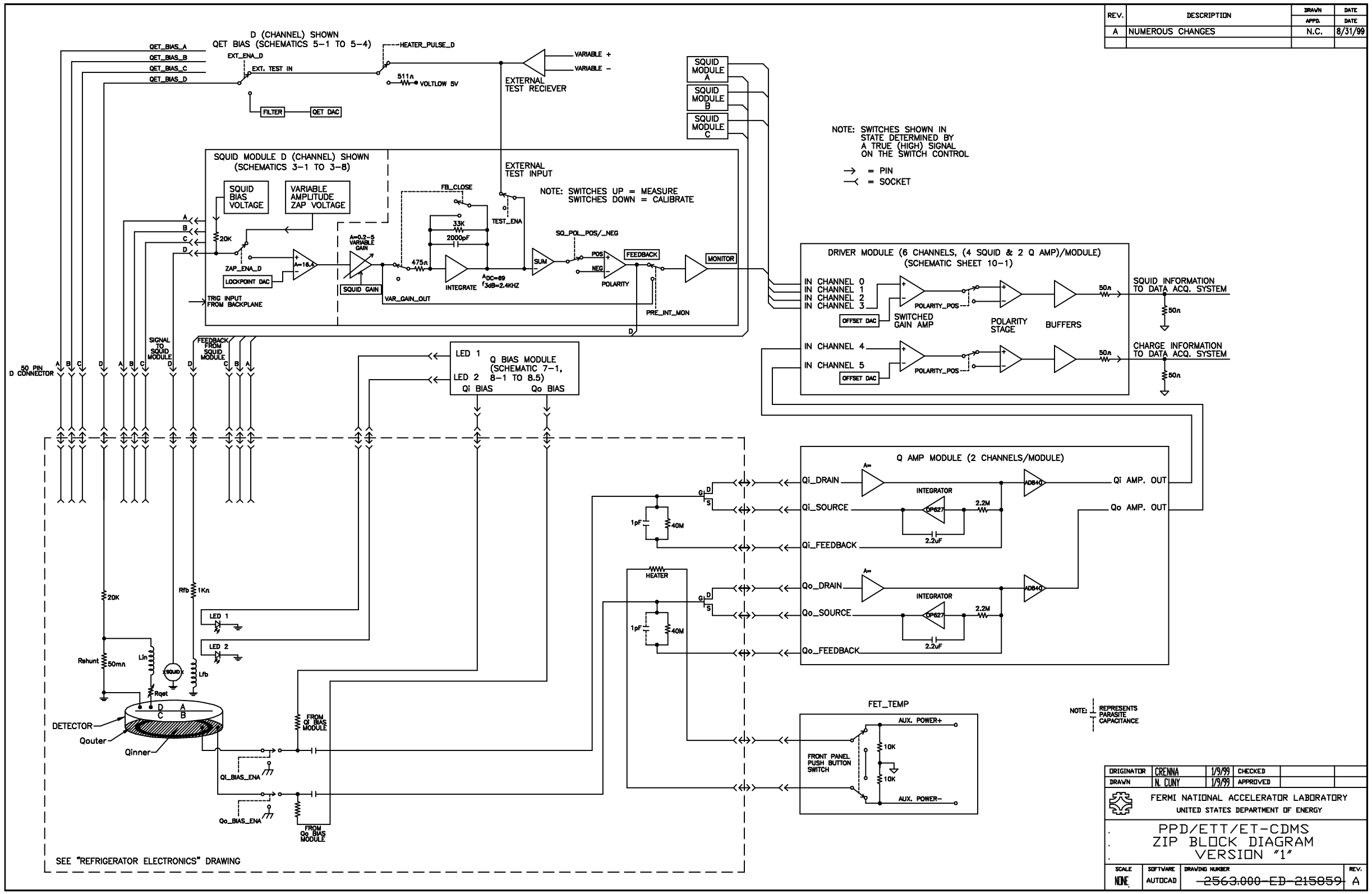

ORIGINATOR	CRENNA	1/9/99	CHECKED	
DRAWN	N. CUNY	1/9/99	APPROVED	

FERMI NATIONAL ACCELERATOR LABORATORY
UNITED STATES DEPARTMENT OF ENERGY

PPD/ETT/ET-CDMS
ZIP BLOCK DIAGRAM
VERSION "1"

SCALE	SOFTWARE	DRAWING NUMBER	REV.
NONE	AUTOCAD	~~2563.000-ED-215859~~	A