REV.	DESCRIPTION	DRAWN	DATE
		APPD.	DATE

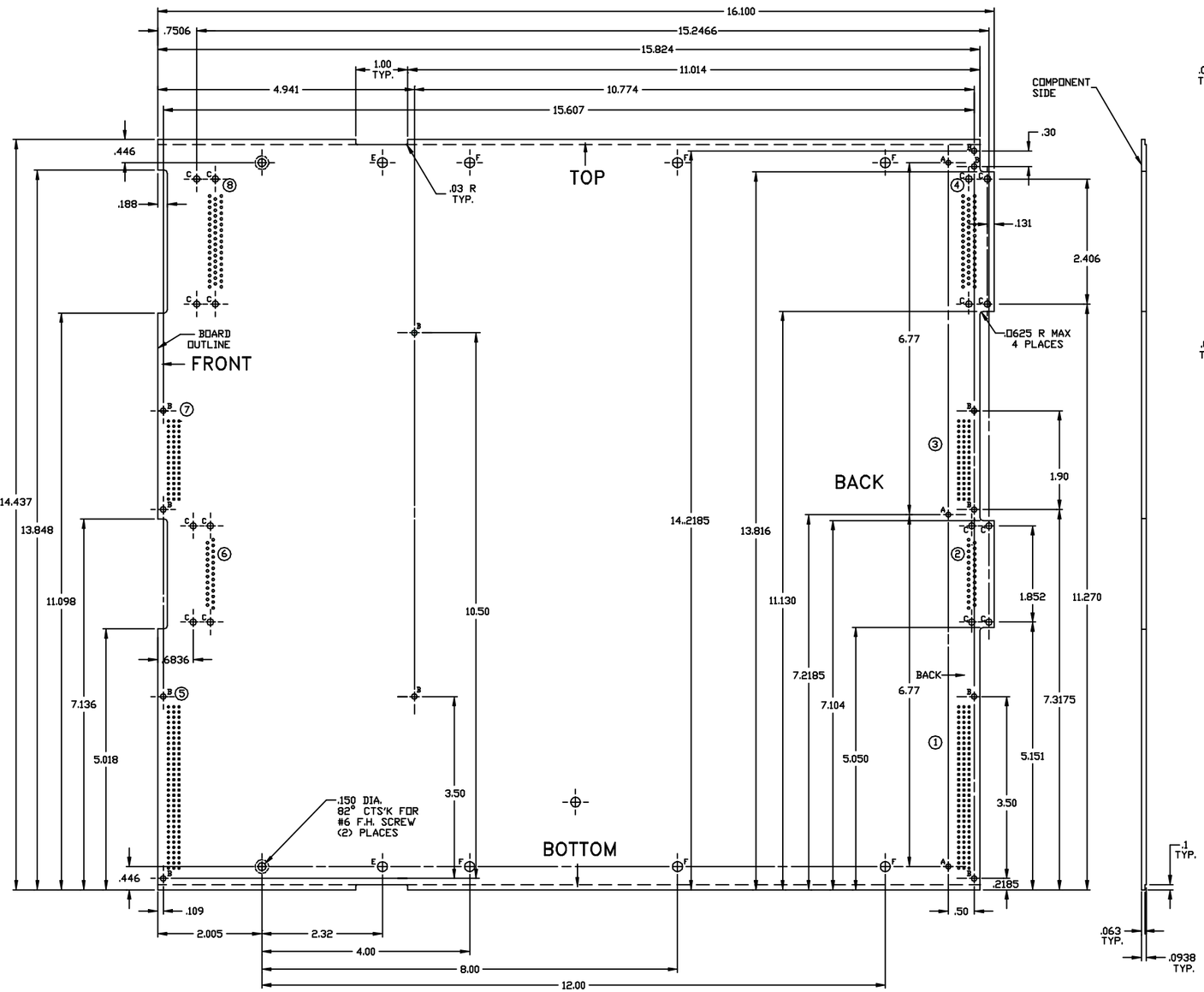

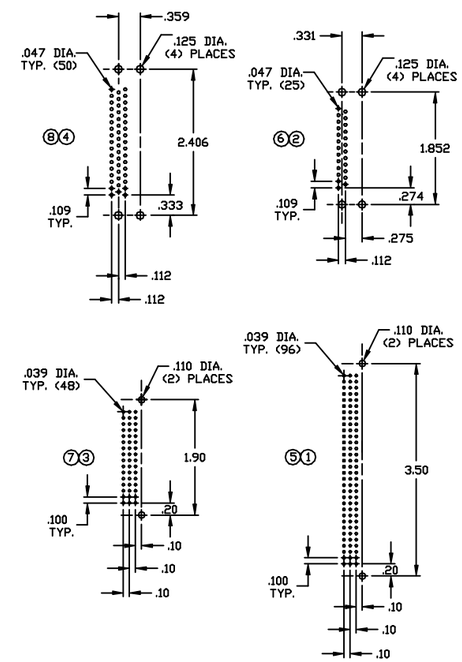

1) ALL DIMENSIONS ARE IN INCHES.
2) ALL DECIMAL DIMENSIONS HAVE +/- 0.005" TOLERANCE
3) ALL HOLE DIAMETER TOLERANCES ARE +/- 0.003"

A = .101" DIA.
B = .106" DIA.
C = .125" DIA.
D = .156" DIA.
E = .191" DIA.
F = .195" DIA.

⑤⑥⑦⑧ MIRROR IMAGE FOOTPRINT

ITEM	DESCRIPTION	MFGR.	PART NO.	QTY.
8	50 socket receptacle	"	745116-2	1
7	48 socket connector	"	650868-5	1
6	25 socket receptacle	"	745114-2	1
5	96 socket receptacle	"	650461-5	1
4	50 pin D connector	"	745355-4	1
3	48 pin connector	"	650948-5	1
2	25 pin D connector	"	745353-4	1
1	96 pin connector	AMP	650947-5	1

ORIGINATOR	M. HALTEMAN	7/6/00	CHECKED	
DRAWN	N. CUNY	7/6/00	APPROVED	

FERMI NATIONAL ACCELERATOR LABORATORY
UNITED STATES DEPARTMENT OF ENERGY

PPD/ETT/ES-CDMS (E891)
9U EXTENDER BOARD DIM'S
MACHINE DRAWING

SCALE	SOFTWARE	DRAWING NUMBER	REV.
FULL	AUTOCAD		D