REV.	DESCRIPTION	DRAWN	DATE
		APPD.	DATE
A	NUMEROUS CHANGES	N.C.	8/31/99

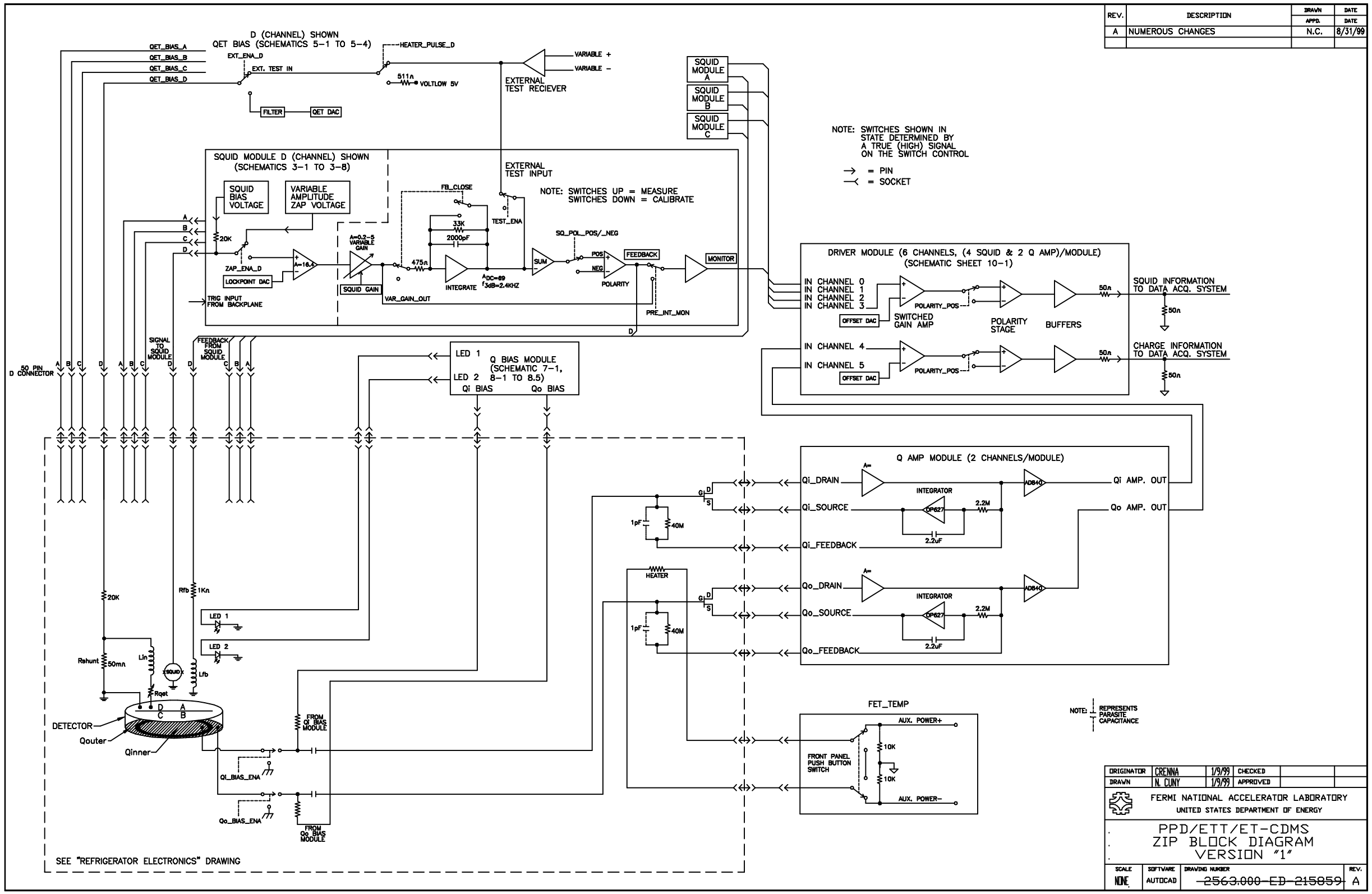

ORIGINATOR	CRENNA	1/9/99	CHECKED	
DRAWN	N. CUNY	1/9/99	APPROVED	

FERMI NATIONAL ACCELERATOR LABORATORY
UNITED STATES DEPARTMENT OF ENERGY

PPD/ETT/ET-CDMS
ZIP BLOCK DIAGRAM
VERSION "1"

SCALE	SOFTWARE	DRAWING NUMBER	REV.
NONE	AUTOCAD	~~2563.000-ED-215859~~	A