REV.	DESCRIPTION	DRAWN	DATE
		APPD.	DATE

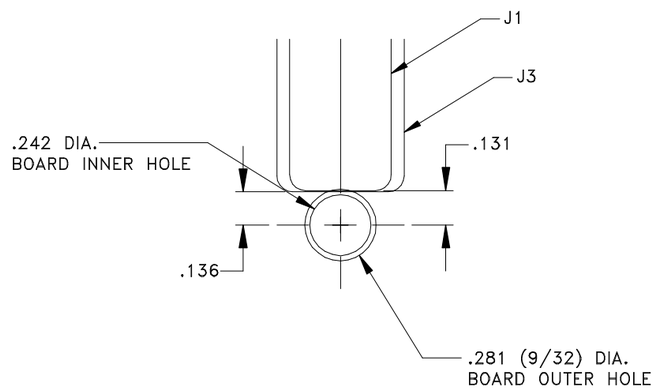

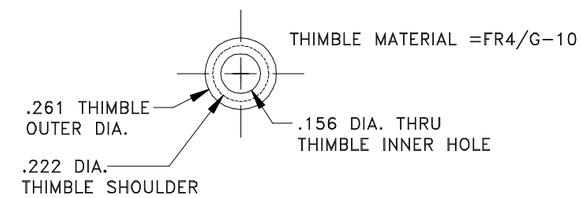

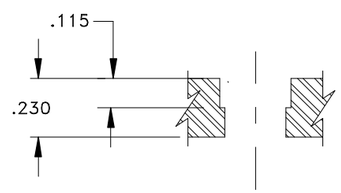

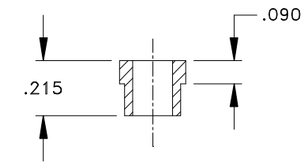

ORIGINATOR	B. WILLIAMS	1/6/98	CHECKED		
DRAWN	N. CUNY	1/6/98	APPROVED		

FERMI NATIONAL ACCELERATOR LABORATORY
UNITED STATES DEPARTMENT OF ENERGY

BACKPLANE MODIFICATION
FOR THINBLE/THREADED INSERT

SCALE	SOFTWARE	DRAWING NUMBER	REV.
FULL	AUTOCAD	~~2836-MC-95142~~	