REV.	DESCRIPTION	DRAWN	DATE
		APPD.	DATE

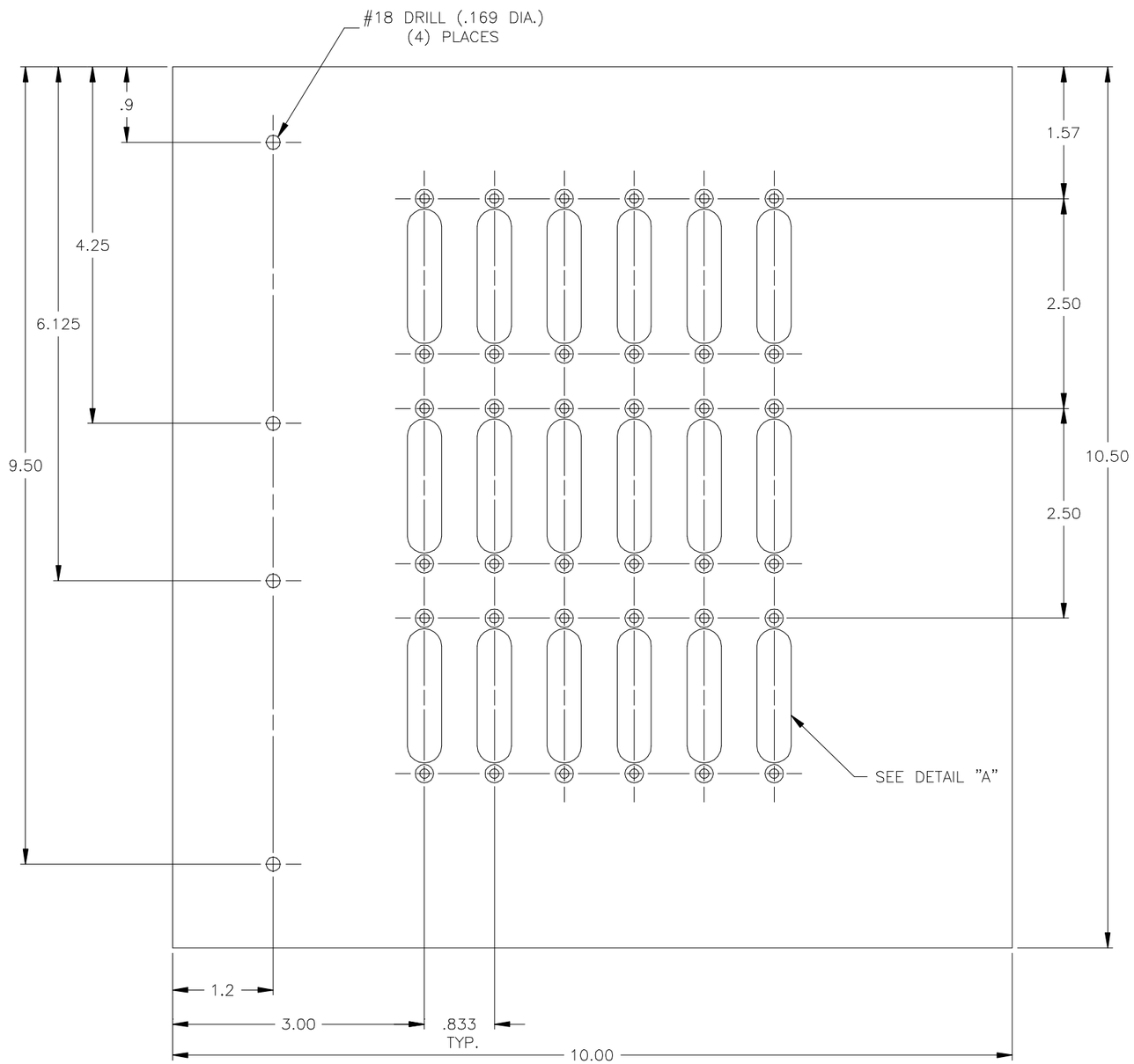

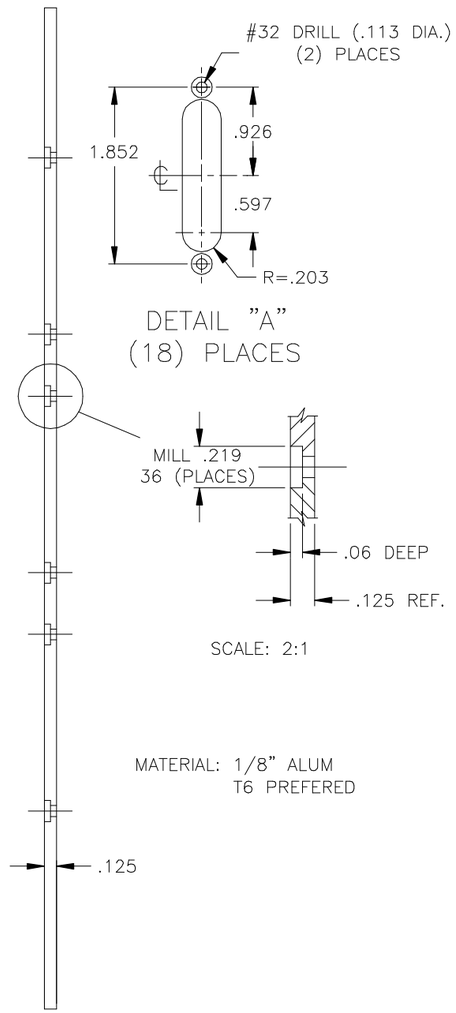

ORIGINATOR	B. WILLIAMS	2/24/98	CHECKED		
DRAWN	N. CUNY	2/24/98	APPROVED		

FERMI NATIONAL ACCELERATOR LABORATORY
UNITED STATES DEPARTMENT OF ENERGY

PARTICLE PHYSICS DIVISION
CDMS BACKPLANE
FERMISHOPS JOB

SCALE	SOFTWARE	DRAWING NUMBER	REV.
FULL	AUTOCAD	~~2836-MC-95142~~	