REV.	DESCRIPTION	DRAWN	DATE
		APPD.	DATE

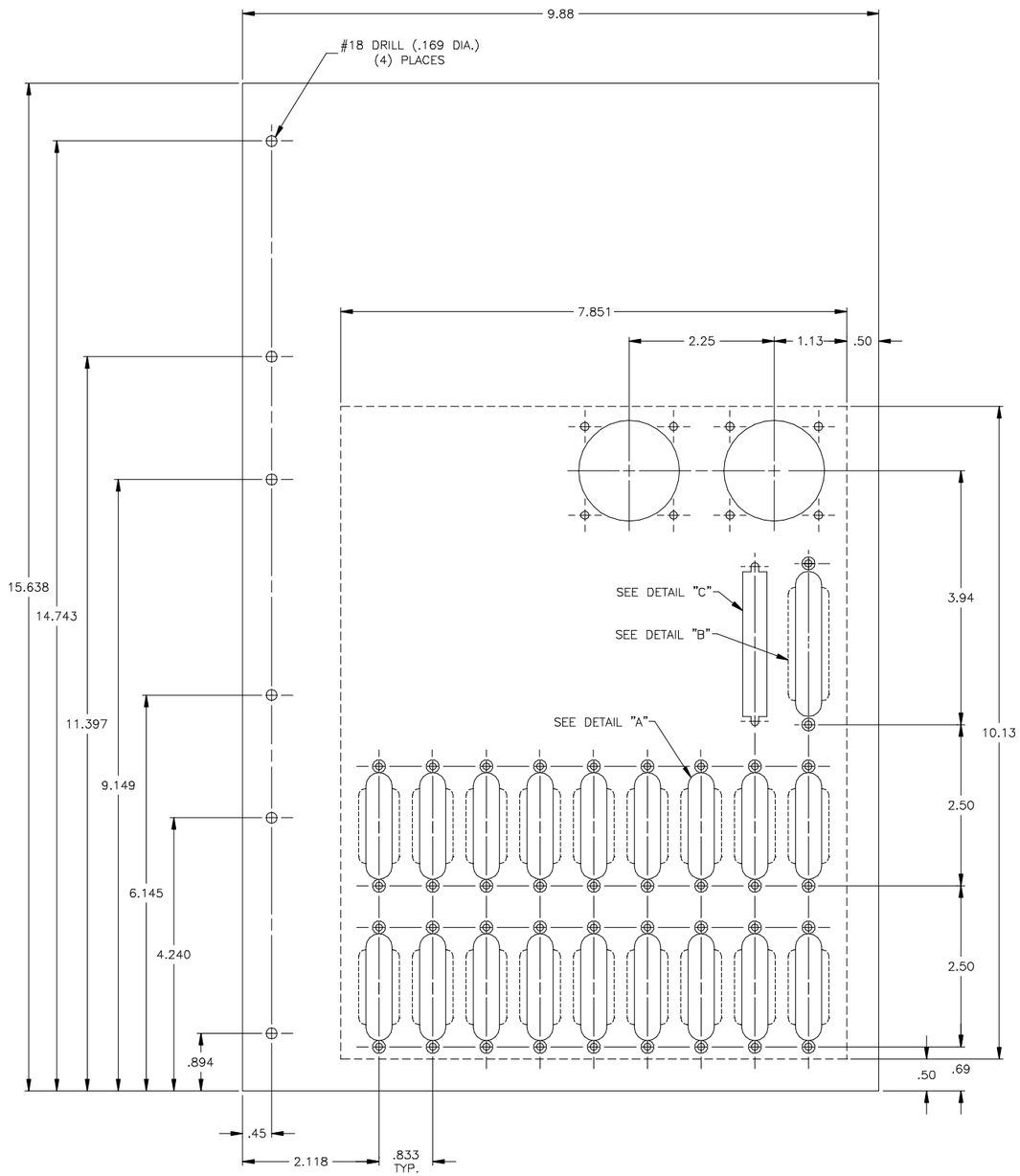

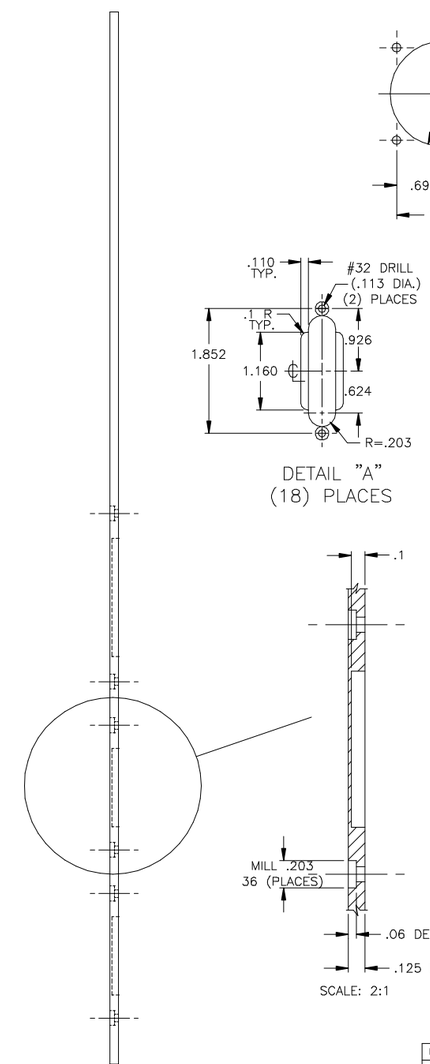

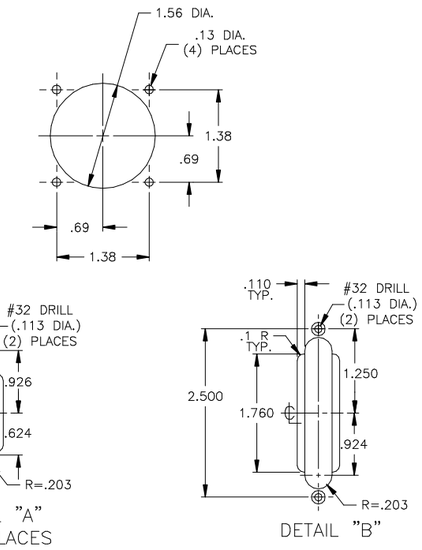

MATERIAL: 1/8" ALUM
T6 PREFERED

ORIGINATOR	WILLIAMS	11/26/96	CHECKED	
DRAWN	N. CUNY	11/26/96	APPROVED	

FERMI NATIONAL ACCELERATOR LABORATORY
UNITED STATES DEPARTMENT OF ENERGY

RESEARCH DIVISION
DARK MATTER BACKPLANE

SCALE	SOFTWARE	DRAWING NUMBER	REV.
NONE	AUTOCAD	—	