REV.	DESCRIPTION	DRAWN / APPD.	DATE / DATE

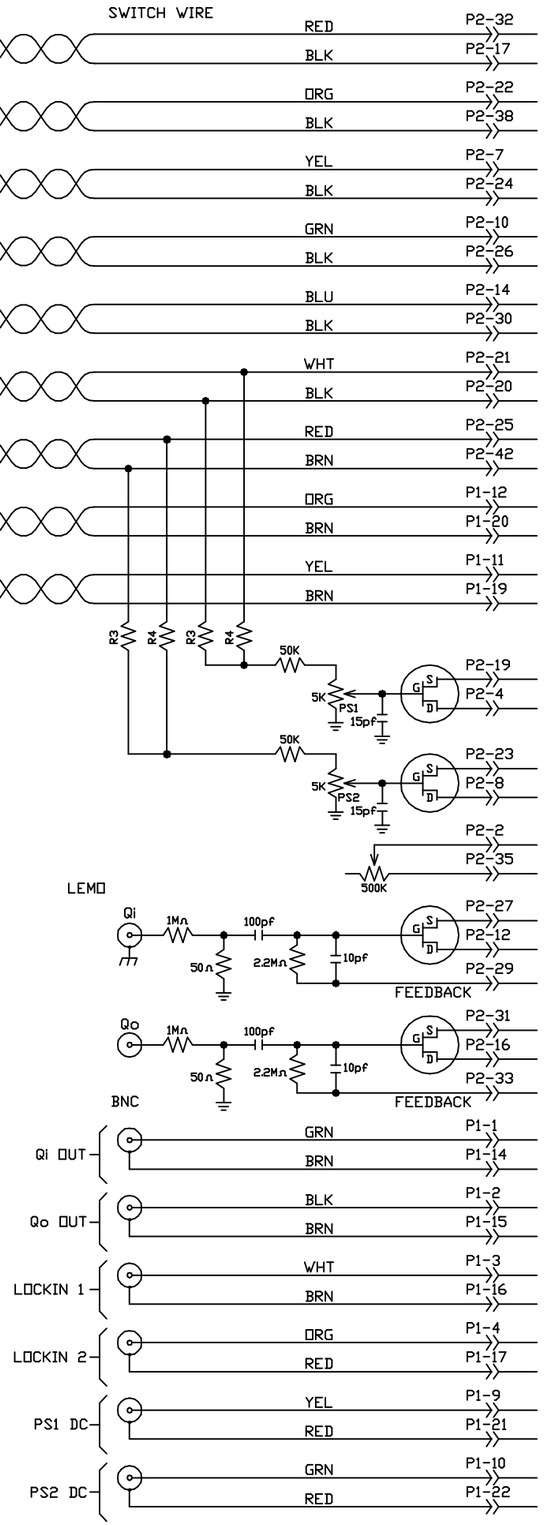

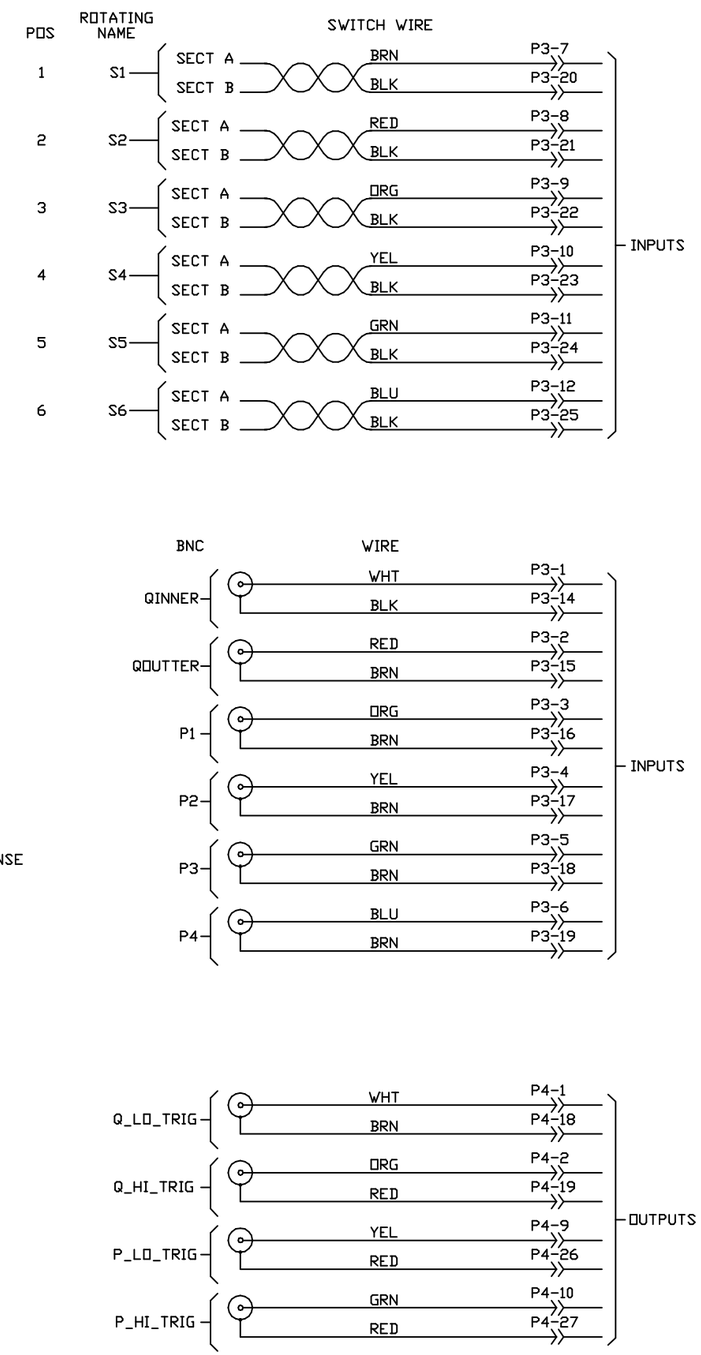

ORIGINATOR	W. JOHNSON	5/12/98	CHECKED		
DRAWN	N. CUNY	5/26/98	APPROVED		

FERMI NATIONAL ACCELERATOR LABORATORY
UNITED STATES DEPARTMENT OF ENERGY

PPD/ETT/ES (CDMS) BLIP /RTF TEST BOX WIRING DIAGRAM

SCALE	SOFTWARE	DRAWING NUMBER	REV.
NONE	AUTOCAD	~~2563.000-ED-215859~~	