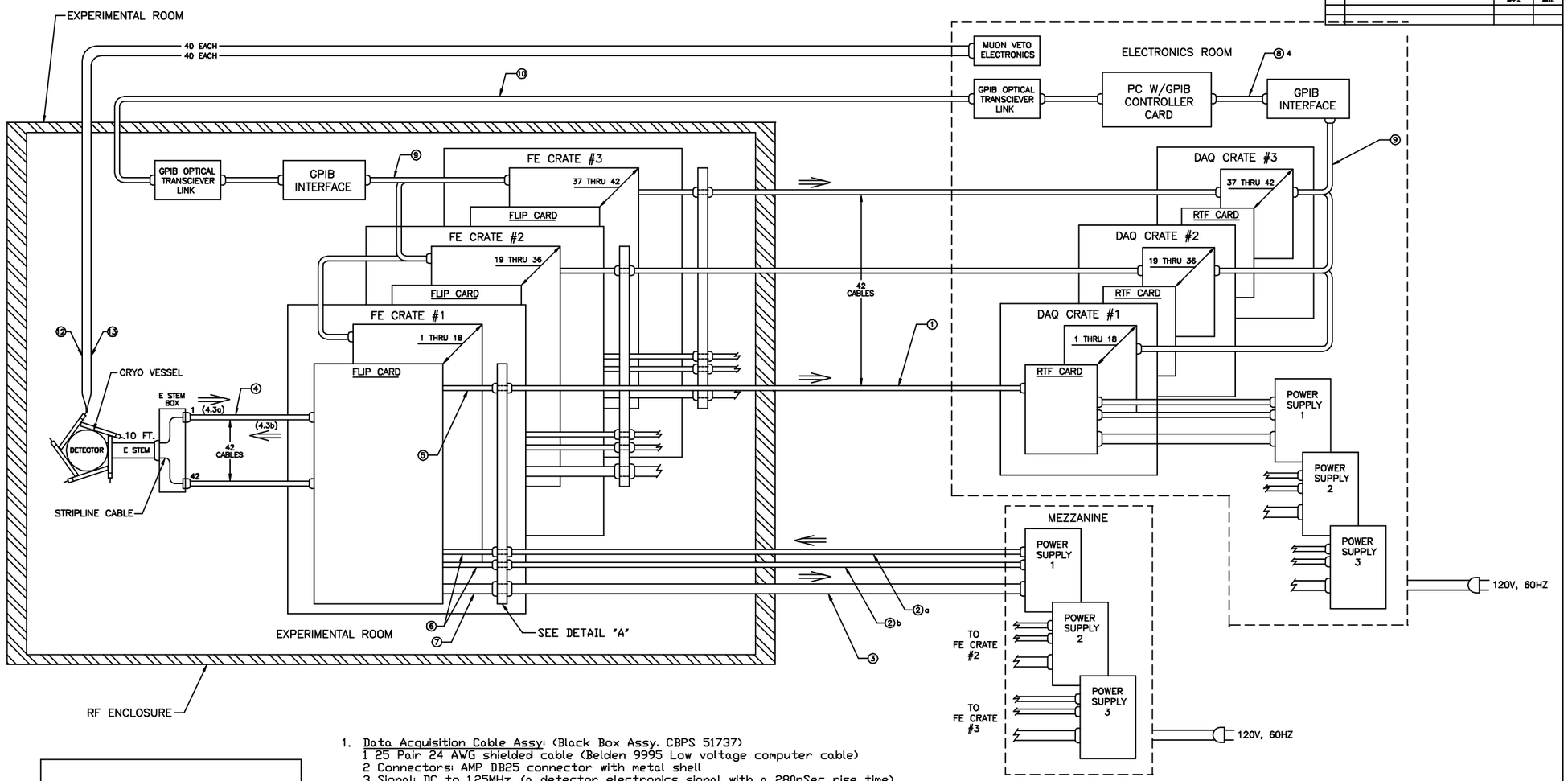

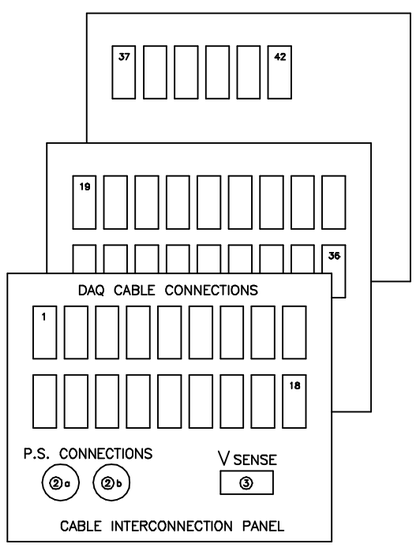

DETAIL A

1. Data Acquisition Cable Assy: (Black Box Assy. CBPS 51737)
   1 25 Pair 24 AWG shielded cable (Belden 9995 Low voltage computer cable)
   2 Connectors: AMP DB25 connector with metal shell
   3 Signal: DC to 1.25MHz. (a detector electronics signal with a 280nSec rise time)
   ⎍ or ⎍ Integrated Pulse
   4 Length: 50 feet

2a. DC Power Cable Assy:
   1 6 conductors of 8 AWG (Belden 9908, 84 #27 Tinned CU, Nom PVC Insulation)
   2 Connectors: Amphenol Model #'s: 97-3102A-24-10xx, 97-3101A-24-10xx
   3 DC voltages: +15V (1A), +15V (15A), -15V (15A)
   4 Length: 25 feet or 35 feet, dependent upon power supply rack location

2b. DC Power Cable Assy:
   1 6 conductors of 8 AWG (Belden 9908, 84 #27 Tinned CU, Nom PVC Insulation)
   2 Connectors: Amphenol Model #'s: 97-3102A-24-10xx, 97-3101A-24-10xx
   3 DC voltages: +5V (3A), +15V (15A), -15V (15A)
   4 Length: 25 feet or 35 feet, dependent upon power supply rack location

3. DC Voltage/Sense & Current Monitor Cable:
   1 34 conductor ribbon cable (ALPHA 3583/34)
   2 Connectors: 3M 3414-6000, ribbon cable crimp connectors
   3 DC sense voltages of 5, +15, -15, and current monitoring signals of <= +150mV
   4 Length: 25 feet or 35 feet, dependent upon power supply rack location

4. Detector Cable Assy: (Black Box Assy. CBCC31212)
   1 25 pair 24 AWG shielded cable (Belden 9995 Low voltage computer cable)
   2 Connectors: AMP DB50 connector with metal shell
   3a Detector output: DC to 3.5MHz. ⎍ Integrated spike with rise time <= 100nSec
   3b Detector input: DC bias of +/-5V
   4 Length: 3 feet

5. Same as 1 above except 3 feet length

6. Same as 2a & 2b above except 3 feet length

7. Same as 3 above except 3 feet length

8. Computer to GPIB Interface Cable:
   1 Cable E57891 Type CLZ (Black Box EXN□2MIEEE-488 Cable) 1C/24AWG & 22C/26 AWG
   2 Connectors: AMP TYPE IEEE-488
   3 Signal: Data & Address Pulses
   4 Length: 10 feet

9. GPIP Interface to FE Crates and DAQ Crates:
   1 Cable Belden T9M28364 Mass Term Cable, E34972 64C28 Shielded
   2 Connectors: Panduit 120-964-455
   3 Signal: Data & Address Pulses
   4 Length: 6 feet

10. Fibre Optic Cable:
   1
   2
   3 Signal: Data & Address Pulses
   4 Length: 50 feet

11. Stripline Cable:
   1
   2
   3a Detector output: DC to 3.5MHz. Integrated spike with rise time <= 100nSec
   3b Detector input: DC bias of +/-5V
   4 Length: 10 feet

12. Muon Veto Cables - Signal:
   1 Cable: RG58
   2 Connectors: BNC
   3 Signal: <5V, 100nSec pulse
   4 Length: 80 feet

13. Muon Veto Cables - High voltage:
   1 Cable: RG59
   2 Connectors: SHV
   3 Signal: <2500VDC, <2mA
   4 Length: 80 feet

REV.	DESCRIPTION	DRAWN / APPD.	DATE / DATE

ORIGINATOR	V. JOHNSON	5/29/98	CHECKED	
DRAWN	N. CUNY	5/29/98	APPROVED	

FERMI NATIONAL ACCELERATOR LABORATORY
UNITED STATES DEPARTMENT OF ENERGY

CRYOGENIC DARK MATTER
SEARCH CABLEING
SCHEMATIC DIAGRAM

SCALE	SOFTWARE	DRAWING NUMBER	REV.
NONE	AUTOCAD	~~2563.400-EE-215122~~	