REV.	DESCRIPTION	DRAWN	DATE
		APPD.	DATE

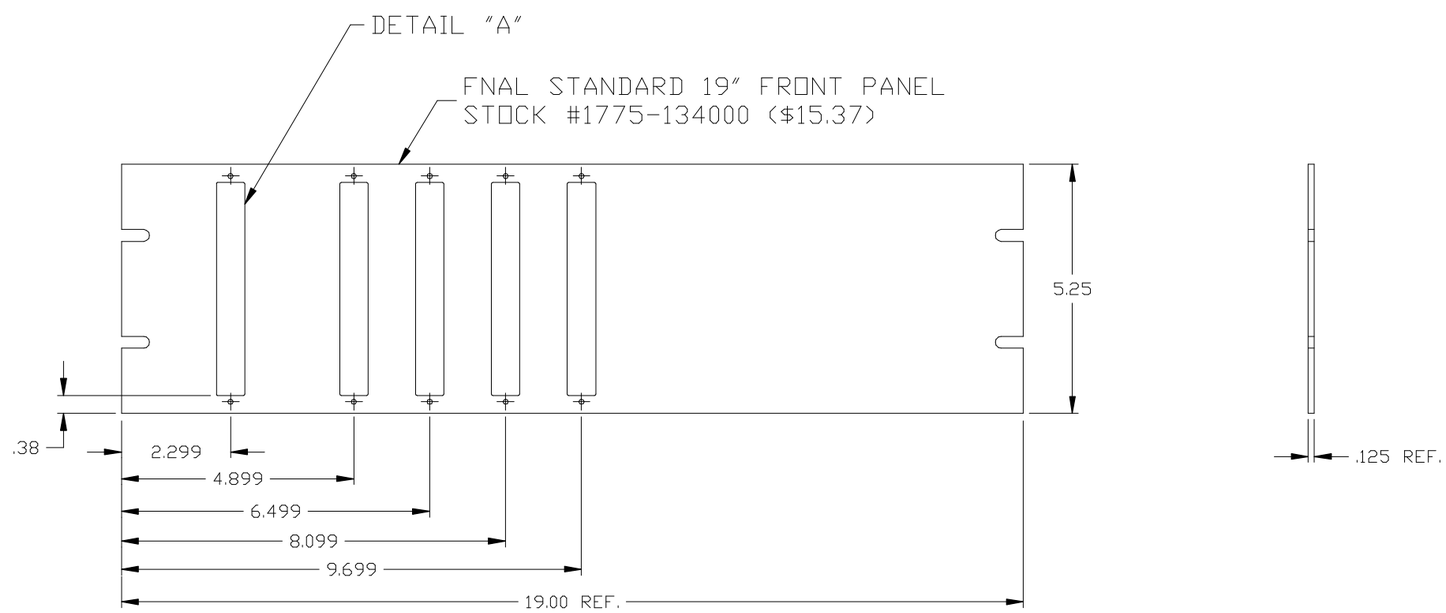

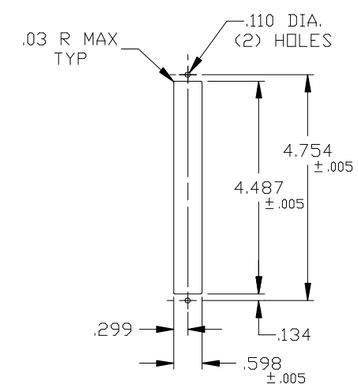

DETAIL "A"

ORIGINATOR	A. PAULLIN	10/2/98	CHECKED		
DRAWN	N. CUNY	10/2/98	APPROVED		

FERMI NATIONAL ACCELERATOR LABORATORY
UNITED STATES DEPARTMENT OF ENERGY

PPD/ETT/ES (CDMS)
GPIB BREAKOUT BAR
MACHINE DRAWING

SCALE	SOFTWARE	DRAWING NUMBER	REV.
FULL	AUTOCAD	~~6008-MC-173253~~	