CDMS POWER SUPPLY MONITORING AND SEQUENCING BLOCK DIAGRAM

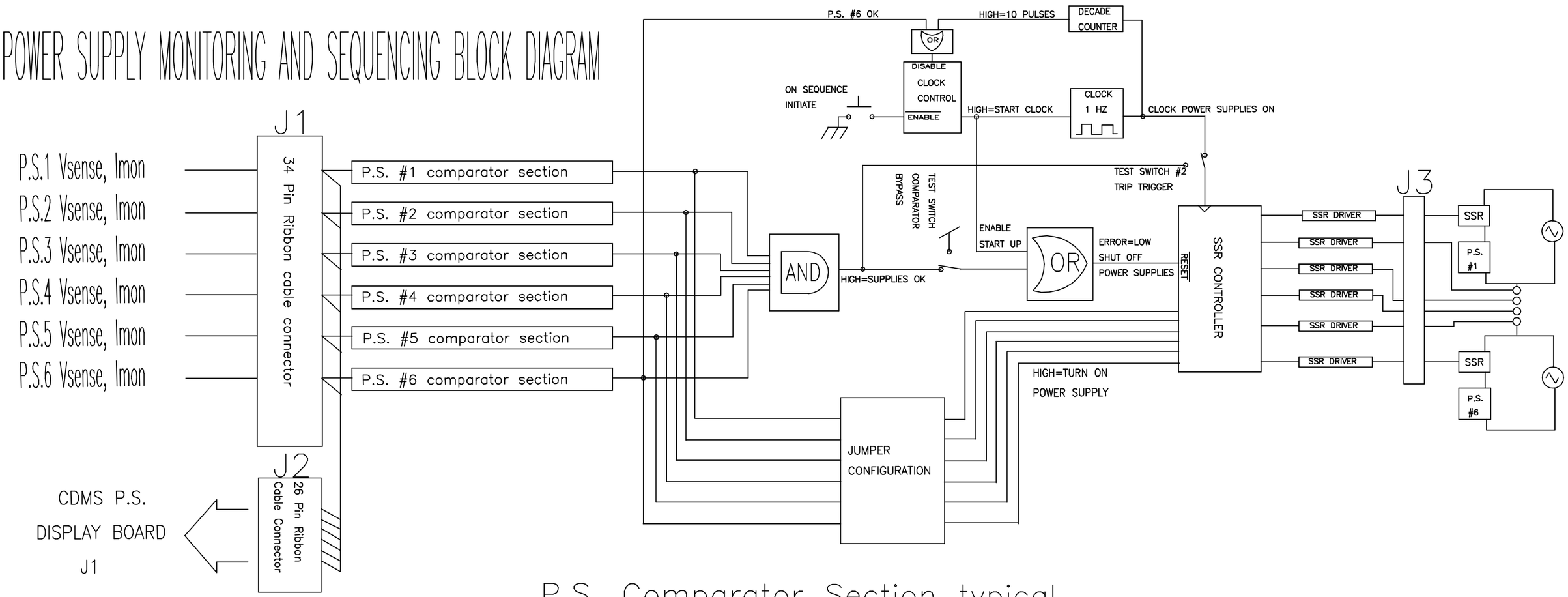

P.S. Comparator Section typical

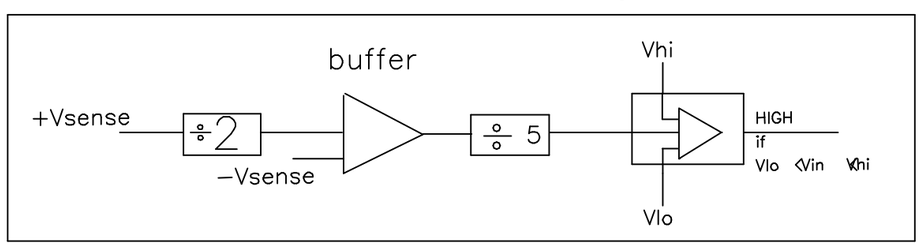

Created by: Wayne Johnson

10 August 1998