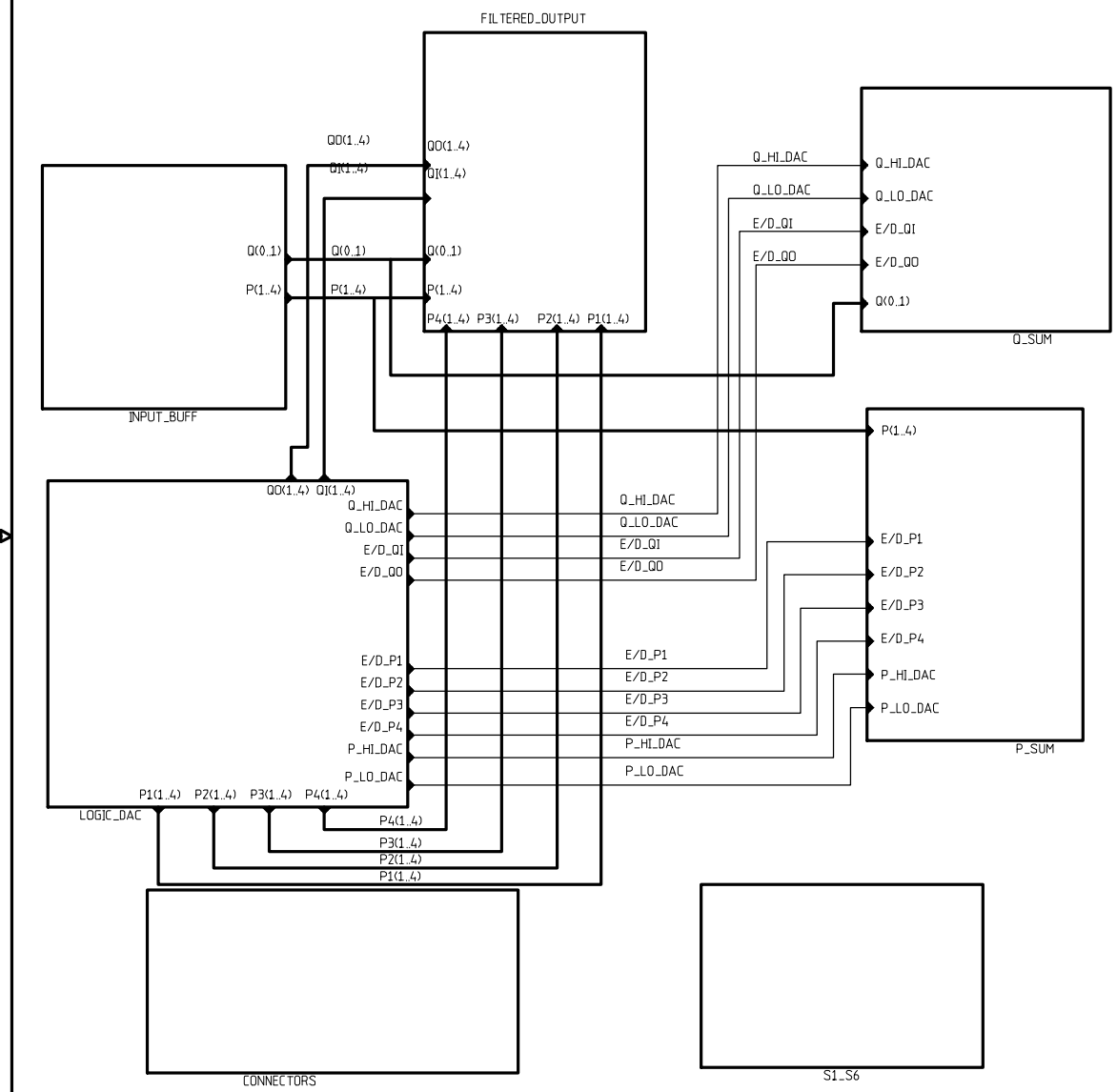

REVISIONS			
REV	DESCRIPTION	DATE	APPROVED
1	SCHEMATICS UPDATED TO INCLUDE ALL MODIFICATIONS TO BOARD	2/23/01	BDM

1: ALL RESISTORS ARE 1% UNLESS OTHERWISE STATED
2: ALL LOGIC LEVELS ARE HIGH TRUE
3. NOTE: ORIGINAL BOARD WAS LAID OUT WITH PCAD, ALL BYPASSING CAPS WERE NOT GIVEN A REFERENCE DESIGNATOR SCHEMATIC RELAID OUT WITH VERYBEST AND ALL BYPASSING CAPACITORS ARE NOW GIVEN A REFERENCE DESIGNATOR.

	NAME	DATE
ORIGINATOR	SEA WOO NAM	22 DEC 98
DRAWN	BRUCE MERKEL	17 MAY 00
CHECKED	M HALDEMAN	17 MAY 00
APPROVED		

FERMILAB PPD/ETT/ES CDMS (E-891)
ZIP RTF MODULE TYPE 5, V 1
BLOCK DIAGRAM

SIZE	FSCM NO.	DWG. NO.	REV
B			1
SCALE		SHEET 1-10	

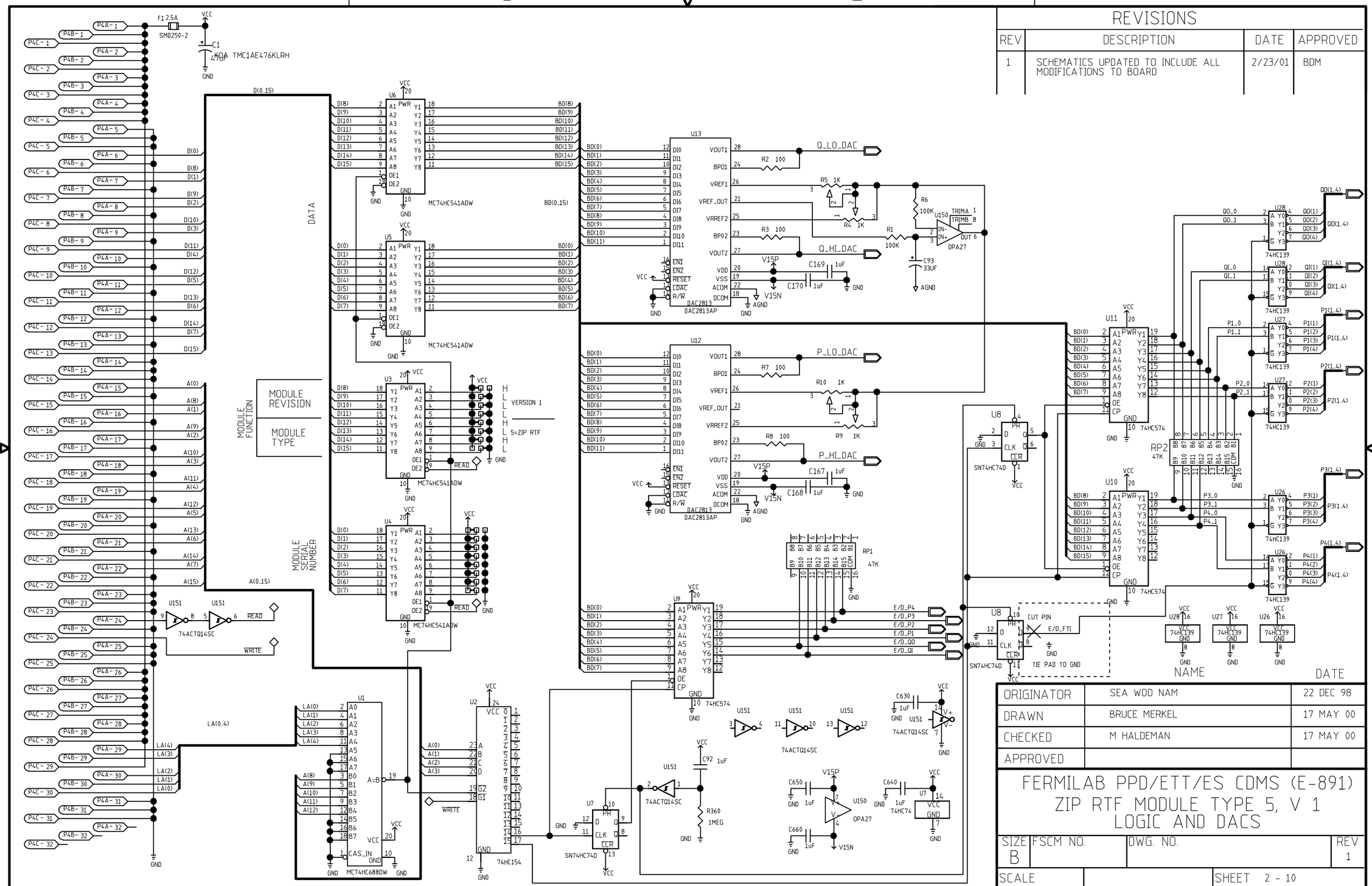

REVISIONS

REV	DESCRIPTION	DATE	APPROVED
1	SCHEMATICS UPDATED TO INCLUDE ALL MODIFICATIONS TO BOARD	2/23/01	BDM

	NAME	DATE
ORIGINATOR	SEA WOO NAM	22 DEC 98
DRAWN	BRUCE MERKEL	17 MAY 00
CHECKED	M HALDEMAN	17 MAY 00
APPROVED		

FERMILAB PPD/ETT/ES CDMS (E-891)
ZIP RTF MODULE TYPE 5, V 1
LOGIC AND DACS

SIZE	FSCM NO.	DWG. NO.	REV
B			1
SCALE		SHEET 2 - 10	

REVISIONS			
REV	DESCRIPTION	DATE	APPROVED
1	SCHEMATICS UPDATED TO INCLUDE ALL MODIFICATIONS TO BOARD	2/23/01	BDM

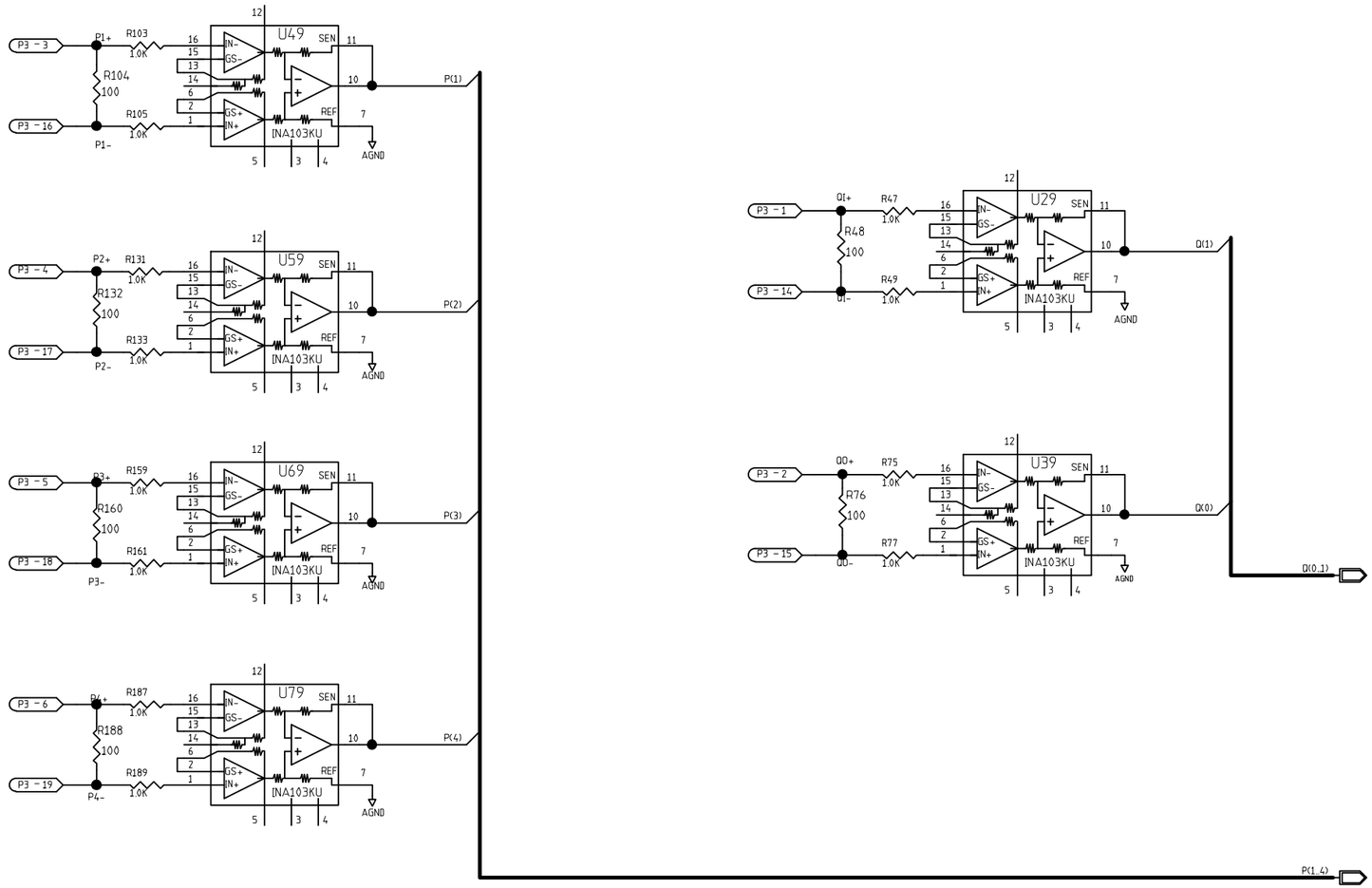

	NAME	DATE
ORIGINATOR	SAE WOO NAM	22 DEC 98
DRAWN	B MERKEL	16 MAY 00
CHECKED	M HALDEMAN	16 MAY 00
APPROVED		

FERMILAB PPD/ETT/ES CDMS (E-891)
ZIP RTF MODULE TYPE 5, V 1
BUFFERED INPUTS

SIZE	FSCM NO.	DWG. NO.	REV
B			1
SCALE		SHEET 3 - 10	

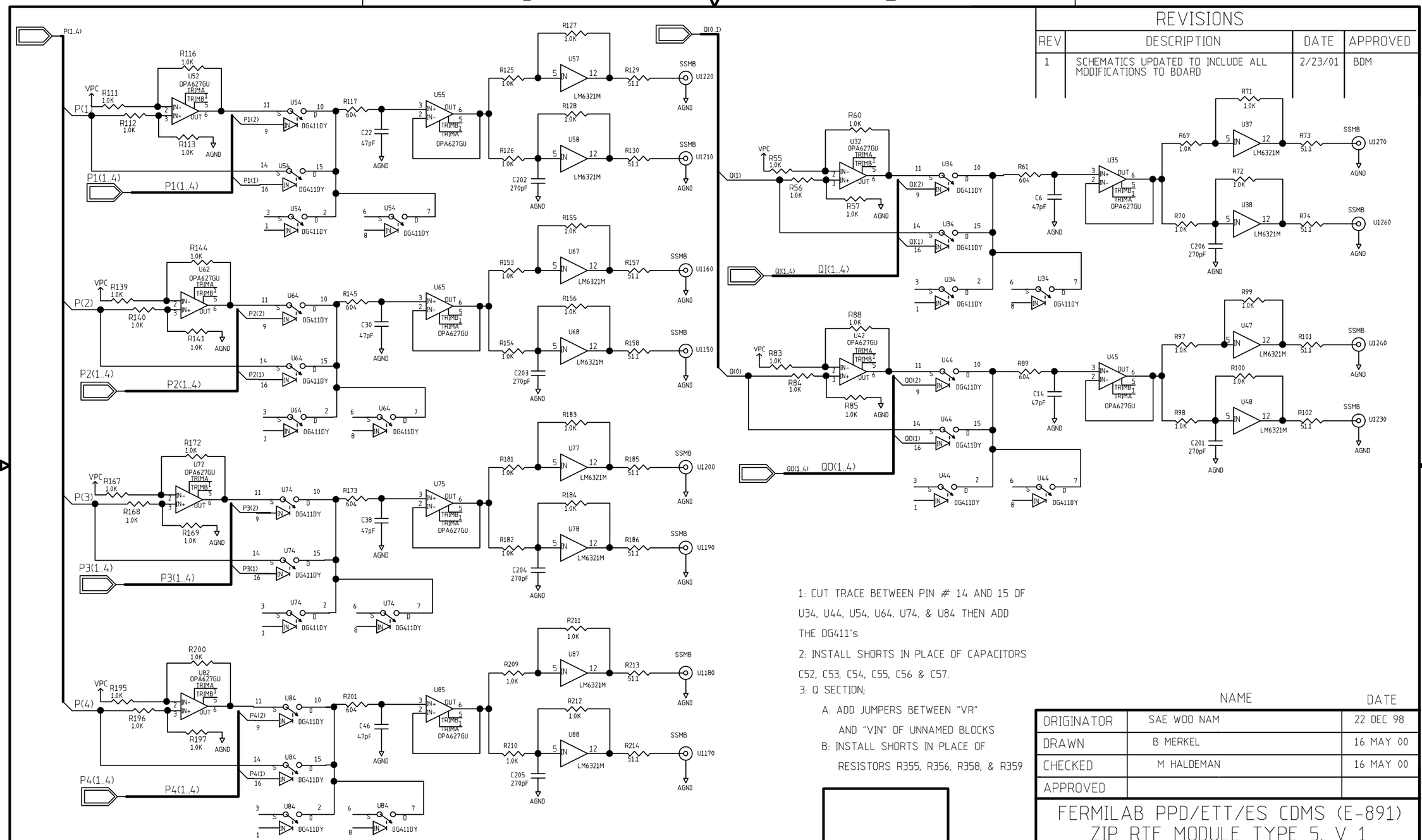

1: CUT TRACE BETWEEN PIN # 14 AND 15 OF U34, U44, U54, U64, U74, & U84 THEN ADD THE DG411's

2: INSTALL SHORTS IN PLACE OF CAPACITORS C52, C53, C54, C55, C56 & C57.

3: Q SECTION;

A: ADD JUMPERS BETWEEN "VR" AND "VIN" OF UNNAMED BLOCKS

B: INSTALL SHORTS IN PLACE OF RESISTORS R355, R356, R358, & R359

FILTER_OUTPUT_BYPASS

REVISIONS

REV	DESCRIPTION	DATE	APPROVED
1	SCHEMATICS UPDATED TO INCLUDE ALL MODIFICATIONS TO BOARD	2/23/01	BDM

	NAME	DATE
ORIGINATOR	SAE WOO NAM	22 DEC 98
DRAWN	B MERKEL	16 MAY 00
CHECKED	M HALDEMAN	16 MAY 00
APPROVED		

FERMILAB PPD/ETT/ES CDMS (E-891)
ZIP RTF MODULE TYPE 5, V 1
BUFFERED OUTPUTS

SIZE	FSCM NO.	DWG. NO.	REV
B			1
SCALE		SHEET 4 - 10	

REVISIONS			
REV	DESCRIPTION	DATE	APPROVED
1	SCHEMATICS UPDATED TO INCLUDE ALL MODIFICATIONS TO BOARD	2/23/01	BDM

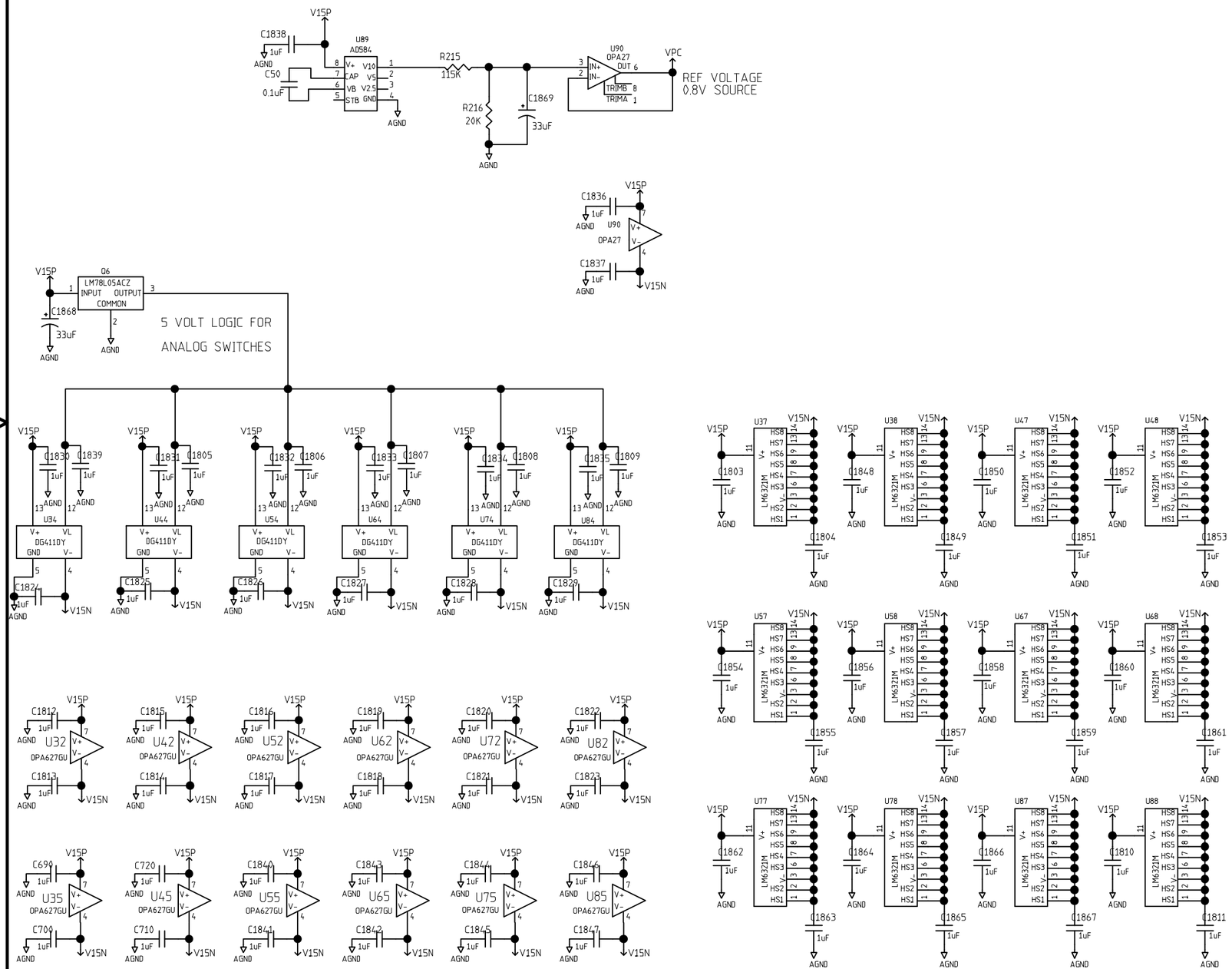

	NAME	DATE
ORIGINATOR	SAE WOO NAM	
DRAWN	B MERKEL	
CHECKED		
APPROVED		

FERMILAB PPD/ETT/ES CDMS (E-891)
ZIP RTF MODULE TYPE 5, V 1
BUFFERED OUTPUTS BYPASSING

SIZE	FSCM NO.	DWG. NO.	REV
B			
SCALE		SHEET	

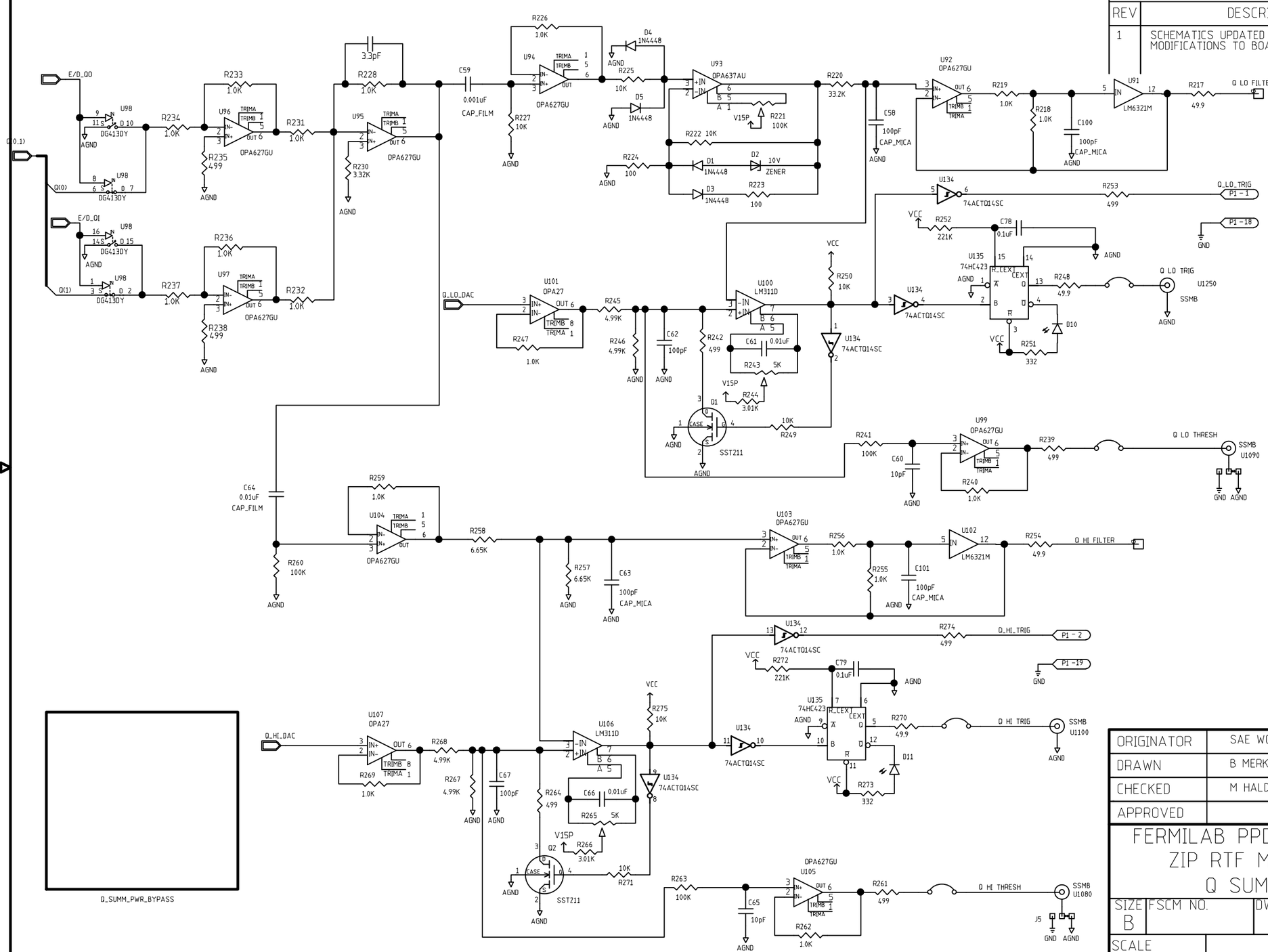

REVISIONS

REV	DESCRIPTION	DATE	APPROVED
1	SCHEMATICS UPDATED TO INCLUDE ALL MODIFICATIONS TO BOARD	2/23/01	BDM

	NAME	DATE
ORIGINATOR	SAE WOO NAM	22 DEC 98
DRAWN	B MERKEL	17 MAY 00
CHECKED	M HALDEMAN	17 MAY 00
APPROVED		

FERMILAB PPD/ETT/ES CDMS (E-891)
ZIP RTF MODULE TYPE 5, V 1
Q SUMMER AND TRIGGER

SIZE	FSCM NO.	DWG. NO.	REV
B			1
SCALE		SHEET 5 - 10	

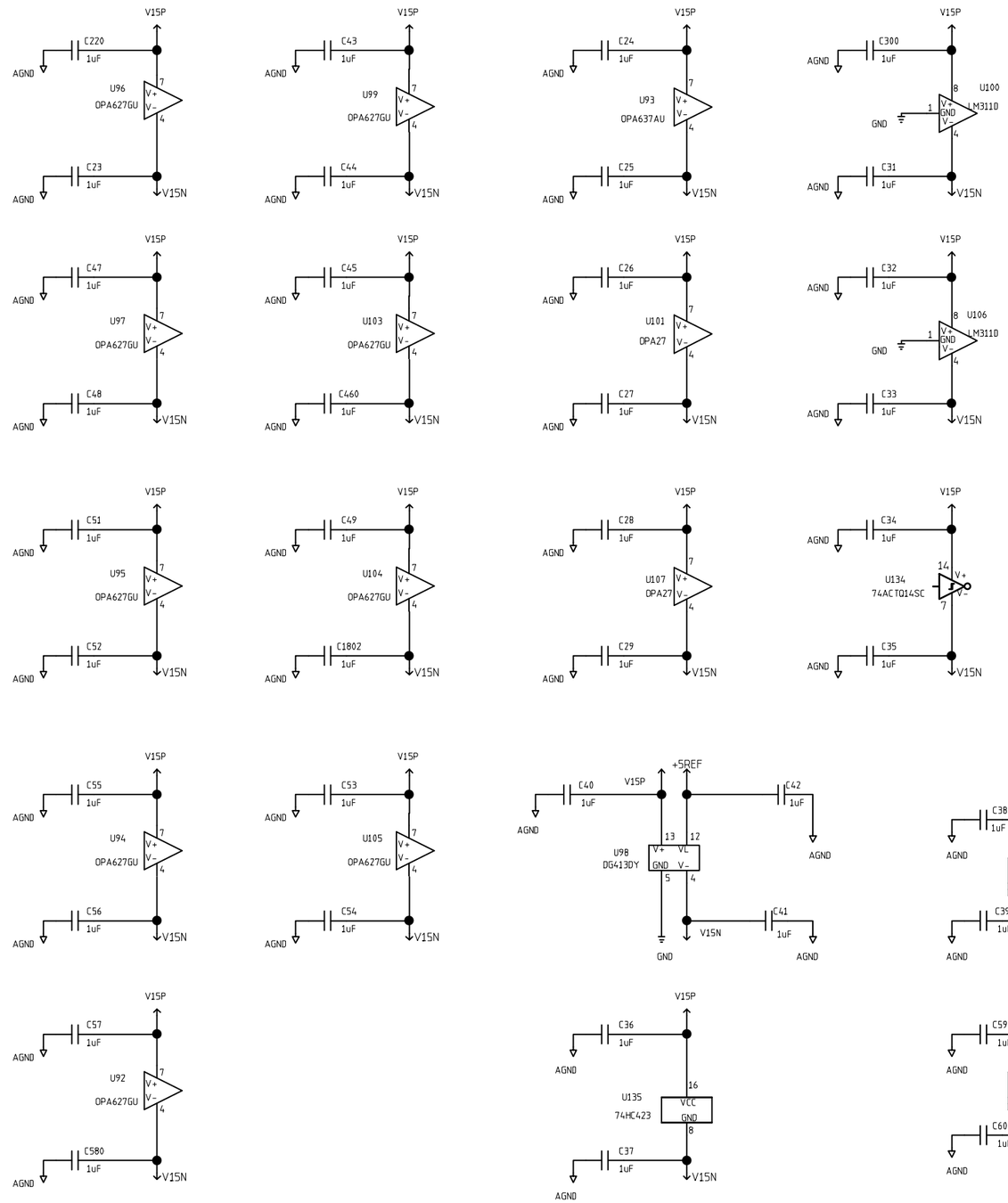

REVISIONS

REV	DESCRIPTION	DATE	APPROVED
1	SCHEMATICS UPDATED TO INCLUDE ALL MODIFICATIONS TO BOARD	2/23/01	BDM

	NAME	DATE
ORIGINATOR	SAE WOO NAM	22 DEC 98
DRAWN	B MERKEL	17 MAY 00
CHECKED	M HALDEMAN	17 MAY 00
APPROVED		

FERMILAB PPD/ETT/ES CDMS (E-891)
ZIP RTF MODULE TYPE 5, V 1
Q SUMMER BYPASSING

SIZE	FSCM NO.	DWG. NO.	REV
B			1

SCALE | SHEET 6 - 10

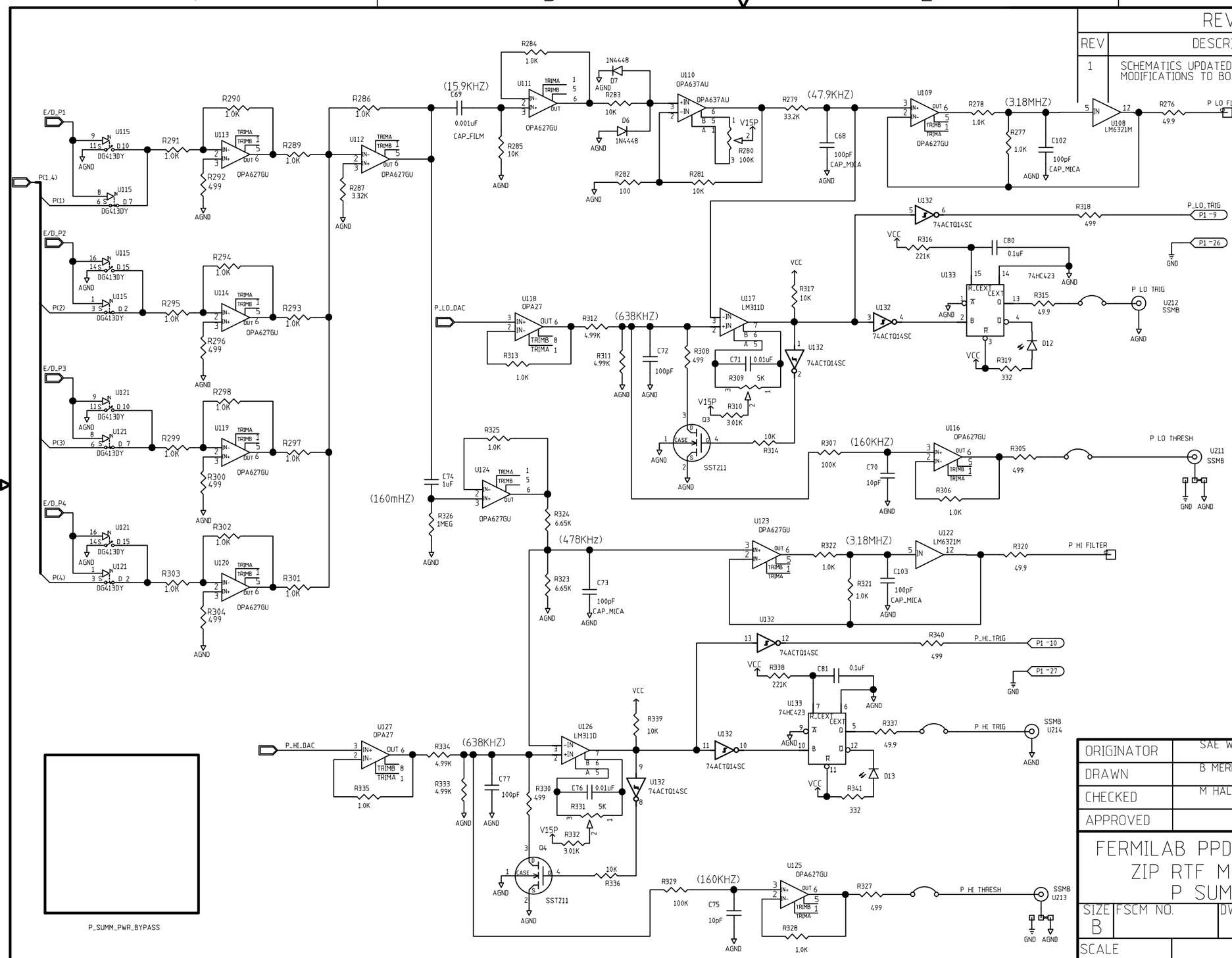

REVISIONS

REV	DESCRIPTION	DATE	APPROVED
1	SCHEMATICS UPDATED TO INCLUDE ALL MODIFICATIONS TO BOARD	2/23/01	BDM

	NAME	DATE
ORIGINATOR	SAE WOO NAM	22 DEC 98
DRAWN	B MERKEL	17 MAY 00
CHECKED	M HALDEMAN	17 MAY 00
APPROVED		

FERMILAB PPD/ETT/ES CDMS (E-891)
ZIP RTF MODULE TYPE 5, V 1
P SUMMER AND TRIGGER

SIZE	FSCM NO.	DWG. NO.	REV
B			1
SCALE		SHEET 7 - 10	

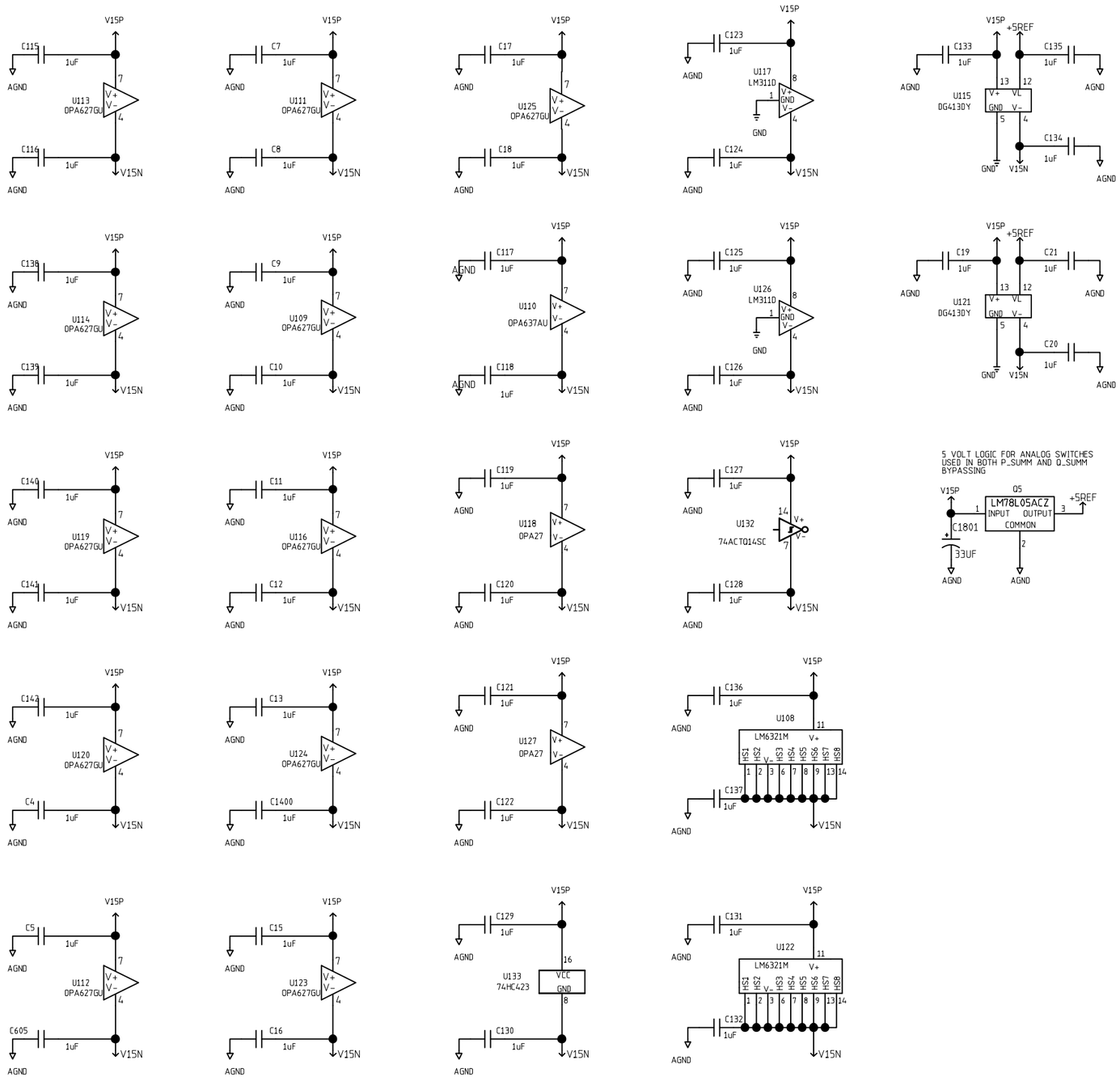

REVISIONS

REV	DESCRIPTION	DATE	APPROVED
1	SCHEMATICS UPDATED TO INCLUDE ALL MODIFICATIONS TO BOARD	2/23/01	BDM

	NAME	DATE
ORIGINATOR	SAE WOO NAM	22 DEC 98
DRAWN	B MERKEL	17 MAY 00
CHECKED	M HALDEMAN	17 MAY 00
APPROVED		

FERMILAB PPD/ETT/ES CDMS (E-891)
ZIP RTF MODULE TYPE 5, V 1
P SUMMER BYPASSING

SIZE	FSCM NO.	DWG. NO.	REV
B			1

SCALE | SHEET 8 - 10

REVISIONS			
REV	DESCRIPTION	DATE	APPROVED
1	SCHEMATICS UPDATED TO INCLUDE ALL MODIFICATIONS TO BOARD	2/23/01	BDM

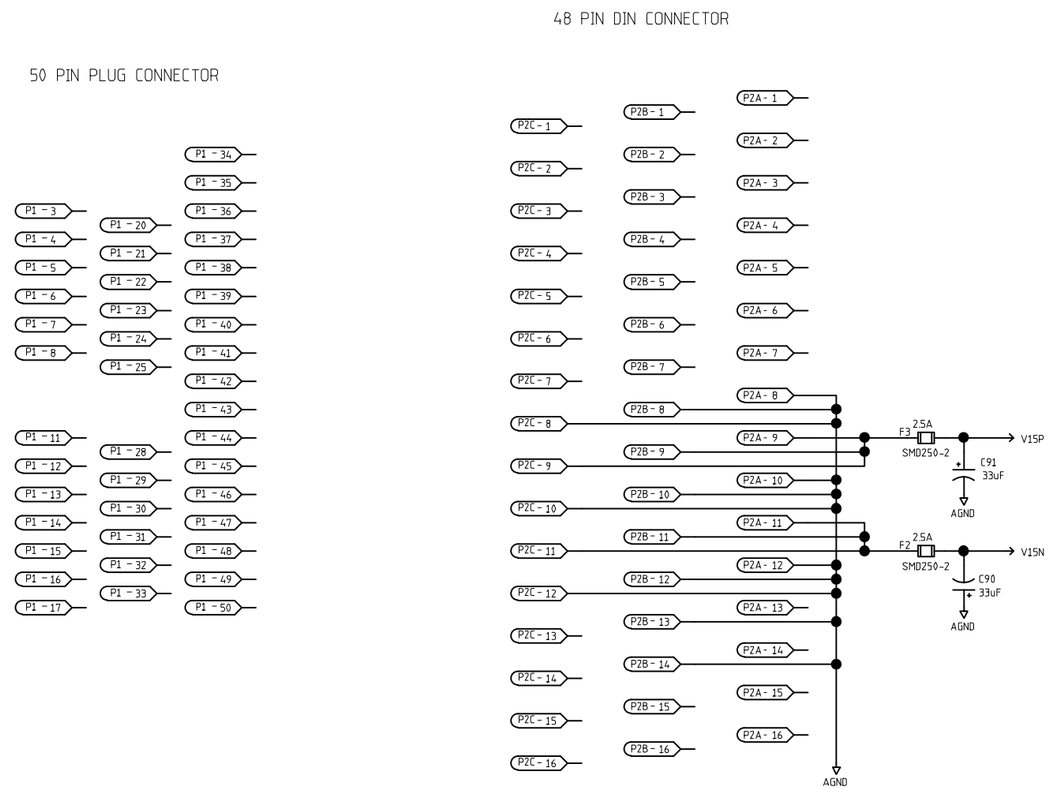

	NAME	DATE
ORIGINATOR	SEA WOO NAM	22 DEC 98
DRAWN	BRUCE MERKEL	17 MAY 00
CHECKED	M HALDEMAN	17 MAY 00
APPROVED		

FERMILAB PPD/ETT/ES CDMS (E-891)
ZIP RTF MODULE TYPE 5, V 1
MISC CONNECTORS

SIZE	FSCM NO.	DWG. NO.	REV
B			1
SCALE		SHEET 9 - 10	

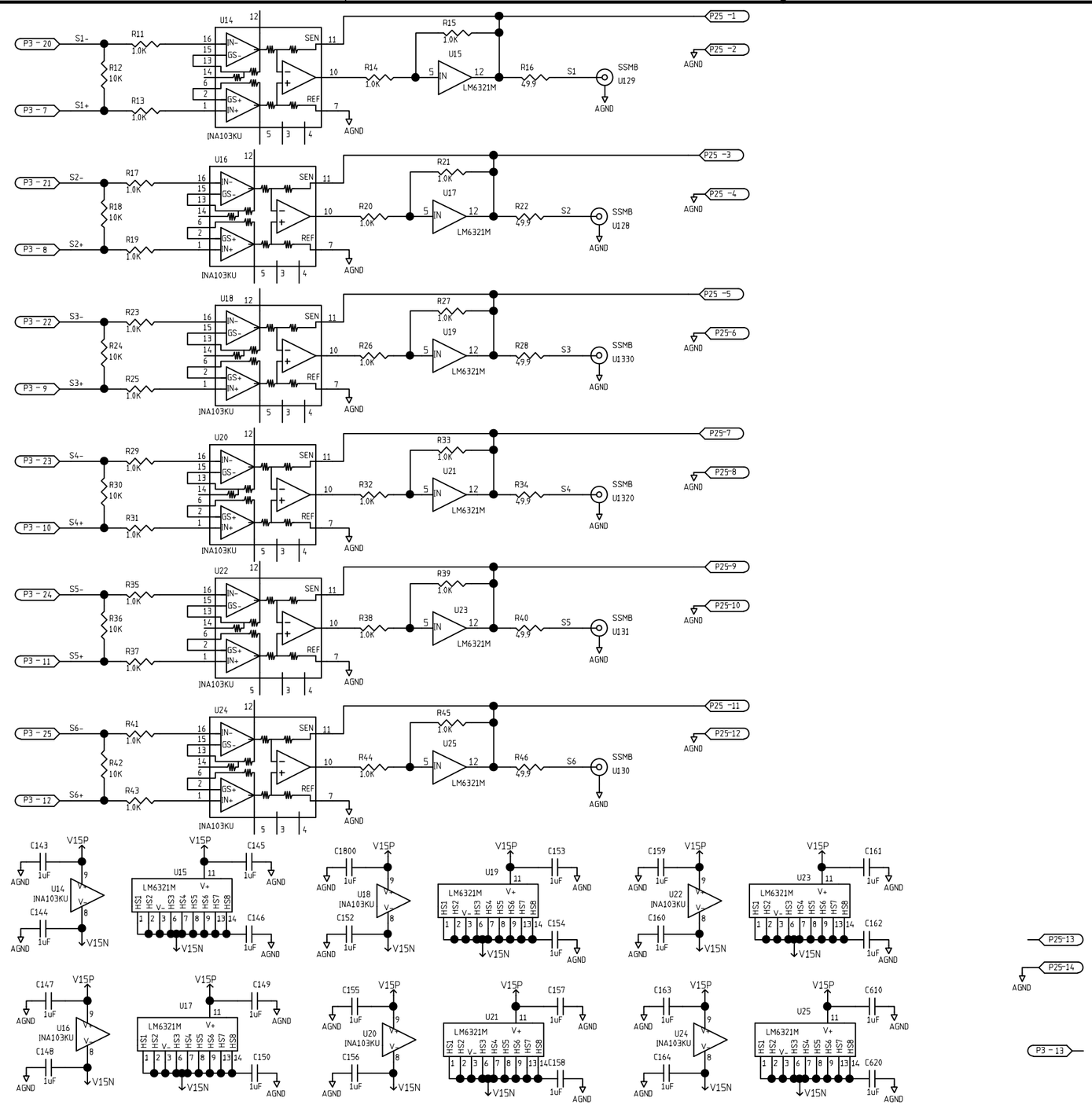

REVISIONS

REV	DESCRIPTION	DATE	APPROVED
1	SCHEMATICS UPDATED TO INCLUDE ALL MODIFICATIONS TO BOARD	2/23/01	BDM

	NAME	DATE
ORIGINATOR	SEA WOO NAM	22 DEC 98
DRAWN	BRUCE MERKEL	17 MAY 00
CHECKED	M HALDEMAN	17 MAY 00
APPROVED		

FERMILAB PPD/ETT/ES CDMS (E-891)
ZIP RTF MODULE TYPE 5, V 1
S1 - S6 SECTION

SIZE	FSCM NO.	DWG. NO.	REV
B			1
SCALE		SHEET 10 - 10	