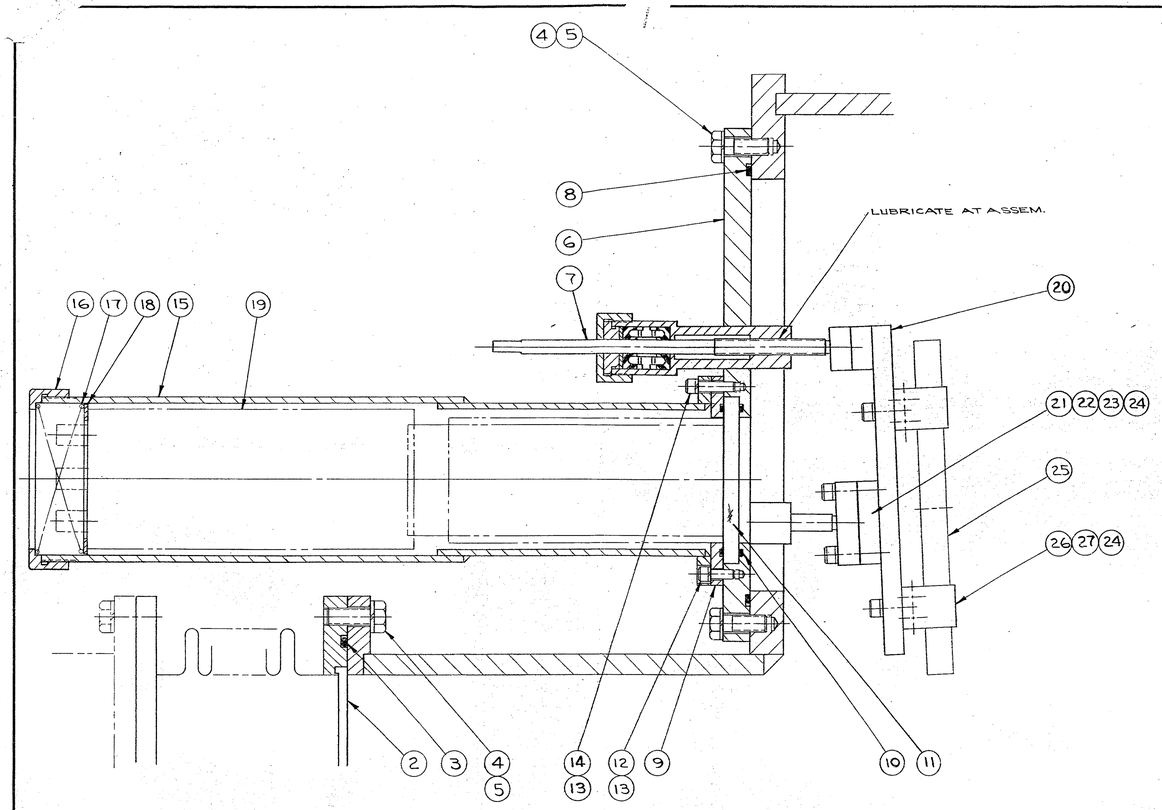

M2 MIRROR ASSEM.
SCALE: FULL

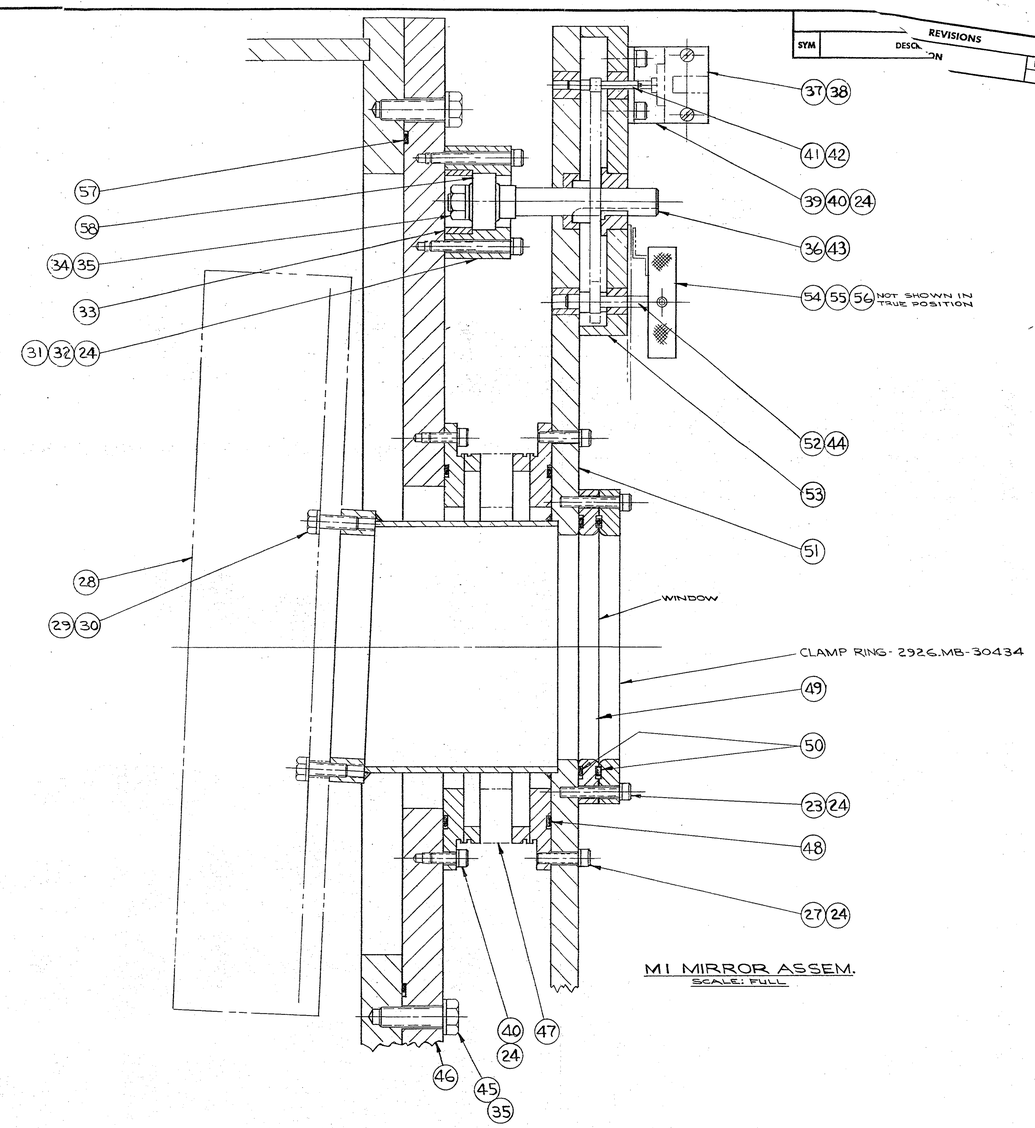

M1 MIRROR ASSEM.
SCALE: FULL

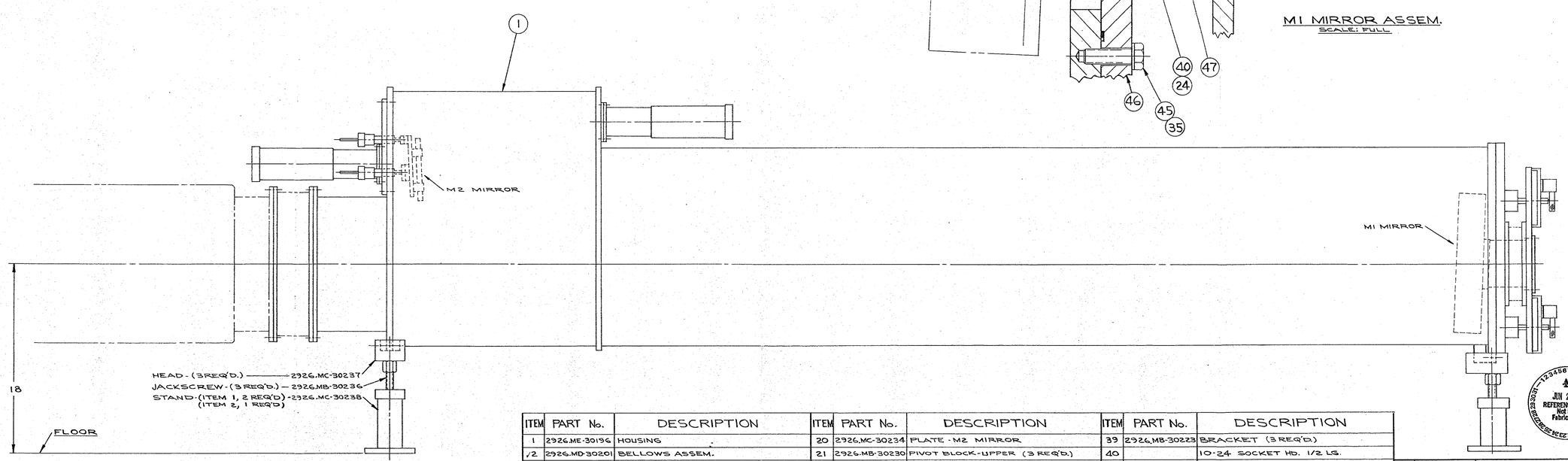

ITEM	PART No.	DESCRIPTION	ITEM	PART No.	DESCRIPTION	ITEM	PART No.	DESCRIPTION
1	2926.ME-30196	HOUSING	20	2926.MC-30234	PLATE - M2 MIRROR	39	2926.MB-30223	BRACKET (3 REQ'D.)
2	2926.MD-30201	BELLOWS ASSEM.	21	2926.MB-30230	PIVOT BLOCK-UPPER (3 REQ'D.)	40		10-24 SOCKET HD. 1/2 LG.
3	2-279	O RING (2 REQ'D.)	22	2926.MB-30231	PIVOT BLOCK-LOWER (3 REQ'D.)	41	2926.MB-30221	SHAFT (3 REQ'D.)
4		5/16-18 HEX HD - 3/4 LG.	23		10-24 SOCKET HD. 1 LG.	42	G159 BOSTON GEAR	GEAR (3 REQ'D.)
5		5/16 LOCKWASHER	24		10-24 LOCKWASHER	43	2926.MB-30222	GEAR (3 REQ'D)
6	2926.MC-30252	COVER & BODY ASSEM.	25		M2 MIRROR	44	G171 BOSTON GEAR	GEAR (3 REQ'D.),
7	2926.MC-30239	ADJUSTING SCREW ASSEM. (3 REQ'D)	26	2926.MB-30229	LUG (4 REQ'D.)	45		3/8-16 HEX HD. 2 LG.
8	2-264	O RING	27		10-24 SOCKET HD. 1 1/2 LG.	46	2926.MD-30213	PLATE
9	2926.MB-30232	RING (2 REQ'D.)	28		M1 MIRROR	47	2926.MC-30218	BELLOWS ASSEM.
10	2-144	O RING (4 REQ'D.)	29		1/4-20 HEX HD.	48	2-259	O RING (2 REQ'D.)
11		QUARTZ WINDOW (2 REQ'D.)	30		1/4 LOCKWASHER	49	2926.MB-30228	RING
12		8-32 SOCKET HD 1/2 LG.	31	2926.MB-30225	HOUSING (3 REQ'D.)	50	2-244	O RING
13		8-32 LOCKWASHER	32		10-24 SOCKET HD. 1 1/2 LG.	51	2926.MC-30216	PLATE & SUPPORT ASSEM.
14		8-32 SOCKET HD. 3/4 LG.	33	2926.MB-30487	SLEEVE (3 REQ'D.)	52	2926.MB-30220	SHAFT (3 REQ'D.)
15	2926.MC-30233	TUBE ASSEM. (2 REQ'D.)	34		3/8-16 HEX NUT (3 REQ'D.)	53	2926.MC-30214	BRACKET (3 REQ'D.)
16	2926.MB-30318	CAP (2 REQ'D.)	35		3/8 LOCKWASHER	54	2926.MB-30224	KNOB (3 REQ'D.)
17	2926.MB-30316	SPRING (2 REQ'D.)	36	2926.MB-30219	SCREW (3 REQ'D)	55	2926.MB-30226	POINTER (3 REQ'D.)
18	2926.MB-30317	WASHER (2 REQ'D.)	37		COUNTER (VEEDER-ROOT) (3 REQ'D)	56	2926.MB-30227	INDEXING PLATE (3 REQ'D.)
19		PHOTO MULTIPLIER TUBE (2 REQ'D.)	38		6-32 ROUND HD. SCREW	57	2-281	O RING
						58	SBG-8	SPHERICAL BEARING (3 REQ'D.) SEALMASTER BEARINGS

SYM	REVISIONS DESCRIPTION	DRAWN	DATE	APPD.	DATE

ITEM NO.	PART NO.	DESCRIPTION	QTY. REQ.

PARTS LIST

UNLESS OTHERWISE SPECIFIED					
FRACTIONS ±	DECIMALS ±	ANGLES ±	ORIGINATOR		
			DRAWN	BREYNE	12-21-71
			CHECKED		
1. BREAK ALL SHARP EDGES 1/64 MAX.			APPROVED	W. C. Pelham	1/19/72
2. DO NOT SCALE DWG.			APPROVED		
3. DIMENSIONING IN ACCORD WITH USASI Y14.5 STD'S.			USED ON		
√ MAX. ALL MACHINED SURFACES			MATERIAL-		

NATIONAL ACCELERATOR LABORATORY
U.S. ATOMIC ENERGY COMMISSION

OPTIC ASSEM
CERENKOV COUNTER
(M1 & M2 MIRRORS)

SCALE	FILMED	DRAWING NUMBER	REV.
3"=1 FT.		2926.ME-30401	

JUN 2001 REFERENCE ONLY Not For Fabrication

BRUNING 40-107