REV	DESCRIPTION	DRAWN	DATE
		APPROVED	DATE

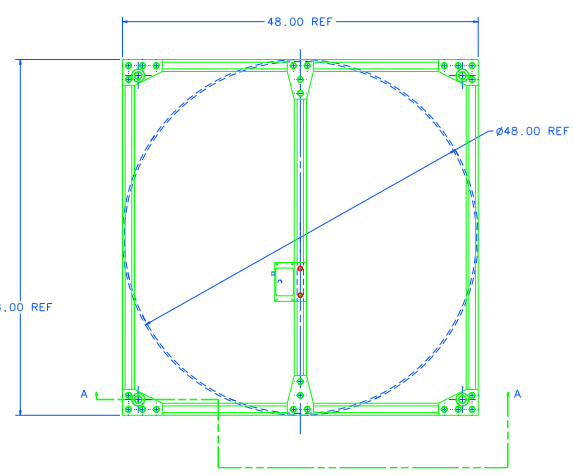

TOP VIEW

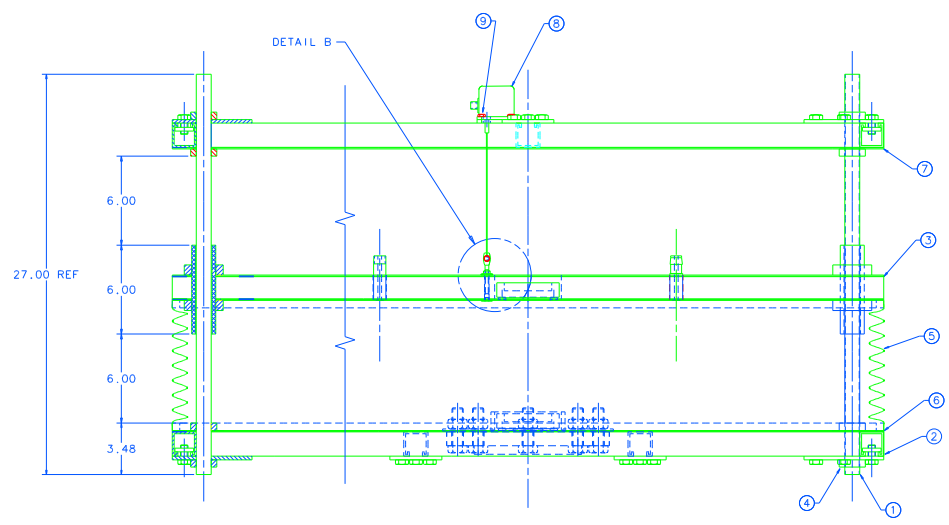

SECTION A-A
(SCALE 1/4)

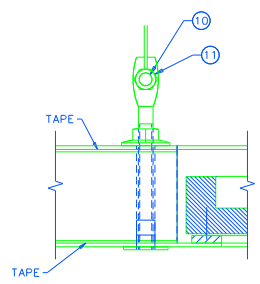

DETAIL "B"
FULL SCALE

NOTE:
1. APPROXIMATE WEIGHT=105 lbs.

ITEM	PART NO.	DESCRIPTION OR SIZE	QTY.
11	1210-0580	NUT, HEX, 8-32	1
10	1226-1605	SCREW, BIND HEAD 8-32 X 3/8" LONG	1
9	1226-0500	BOLT, HEX HEAD 1/4-20 X 1/2" LONG	4
8	COML	ANALOG OUTPUT TRANSMITTER, UNIMEASURE P/N P420-20-CEB	1
7	MD-407177	TOP PLATE SUB-ASSEMBLY	1
6	COML	GLUE, HIGH STRENGTH ADHESIVE/SEALANT MCMASTER-CARR P/N 7475A66	1
5	COML	VENTILATION HOSE 48" O.D. X 13" LONG, FEDERAL HOSE P/N WPV-19742	1
4	COML	SHAFT COLLAR, CLAMP ON, McMASTER-CARR P/N 6435K18	16
3	MD-407168	MIDDLE PLATE SUB-ASSEMBLY	1
2	MD-407167	BOTTOM PLATE SUB-ASSEMBLY	1
1	COML	TUBE, STEEL 1" O.D. X 27.00" LONG, .035" THK WALL, MCMASTER-CARR P/N 89975K33	4

PARTS LIST

UNLESS OTHERWISE SPECIFIED			ORIGINATOR	H.CEASE	18-SEP-2001
.XX	.XXX	ANGLES	DRAWN	J.CATALANELLO	18-SEP-2001
± .06	± XXX	± 1°	CHECKED		
			APPROVED		

1. BREAK ALL SHARP EDGES .015 MAX.
2. DO NOT SCALE DRAWING.
3. DIMENSIONS BASED UPON ANSI Y14.5M-1982
4. MAX. ALL MACH. SURFACES 125

USED ON

MATERIAL: SEE PARTS LIST

FERMI NATIONAL ACCELERATOR LABORATORY
UNITED STATES DEPARTMENT OF ENERGY

PPD/MECHANICAL DEPT.
BTEV/RICH DET/PASSIVE EXP VOLUME
TEST FUNCTIONALITY, ASSEMBLY DWG

SCALE	DRAWING NUMBER	SHEET	REV
1/8	8918.130-MD-407169	1 OF 1	

CREATED WITH : Ideas8m4 GROUP: PPD/MECHANICAL DEPARTMENT

Plotted by catalan on 09-Apr-02 , File: exp_vol_assy.pff