REV	DESCRIPTION	DRAWN	DATE
		APPROVED	DATE

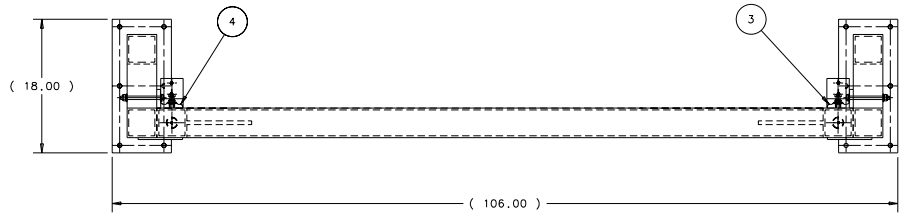

NOTES:

1. TORQUE BOLT CONNECTIONS TO 75 FT./LBS.
2. THIS DIMENSION IS INITIAL SETTING. THE INNER FRAME CAN TRAVEL VERTICALLY ±1" MAX. BEFORE MAKING THE FINAL ADJUSTMENT,RELEASE THE JAM NUT ON ITEM 12 AND LOOSEN ITEM 9 SHOWN IN SECTION A-A. AFTER COMPLETING THE FINAL ADJUSTMENT, TORQUE THE JAM NUT ON ITEM 12 TO 45 FT./LBS. AND ITEM 9 TO 75 FT./LBS.

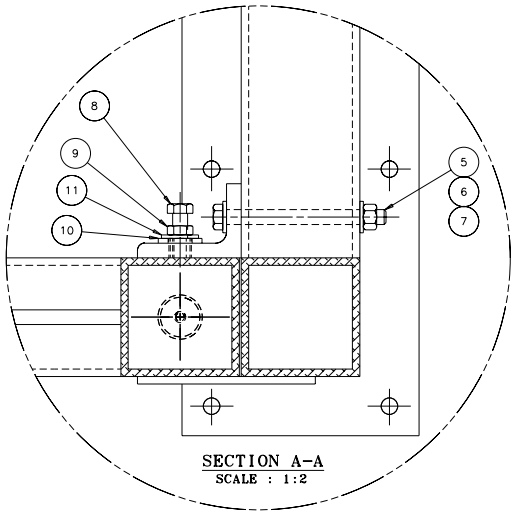

SECTION A-A
SCALE : 1:2

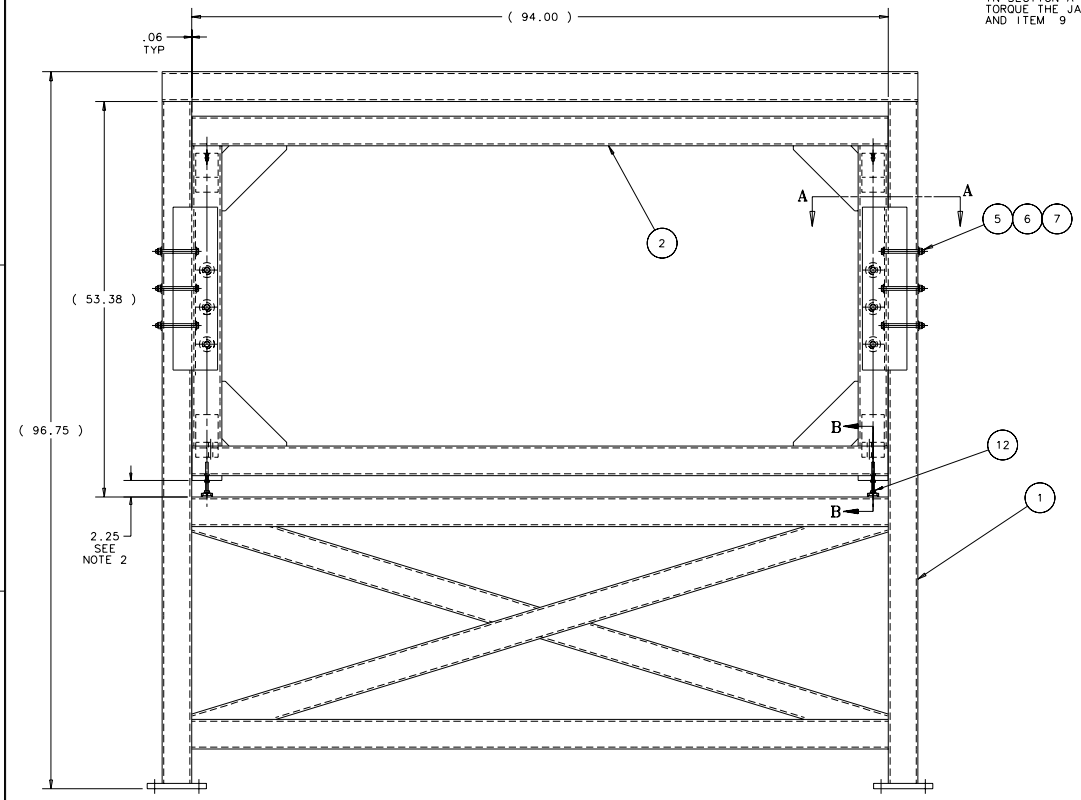

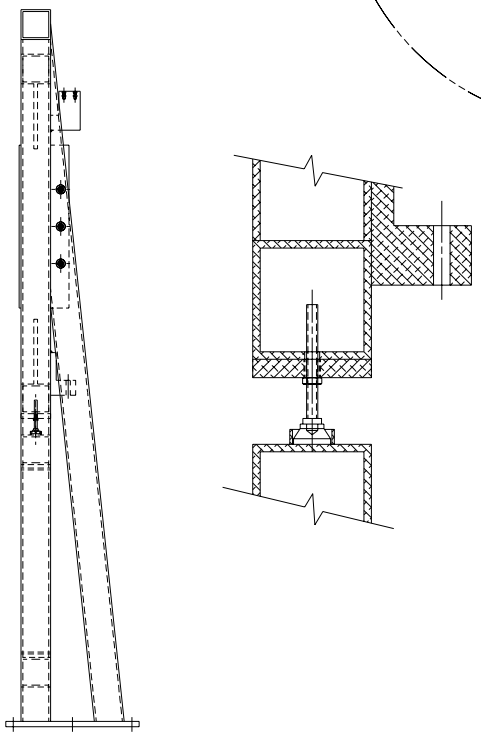

SECTION B-B
SCALE : 1:2

APPROX WT. = 540 LBS.

ITEM	PART NO.	DESCRIPTION OR SIZE	QTY.
12	MC-397795	LEVELING FOOT ASSEMBLY	2
11	COML	316 SST FLAT WASHER-1/2" SCREW SIZE	6
10	COML	S.S 300 SERIES FLAT WASHER-3/4" SCREW SIZE	6
9	COML	316 S.S HEX.JAM NUT - 1/2-13 UNC	6
8	COML	316 SST HEX.HD.CAP SCREW-1/2-13 UNC 1.25" LG.	6
7	COML	316 SST HEX.NUT 1/2-13 UNC	6
6	COML	S.S 300 SERIES FLAT WASHER 1/2" SCREW SIZE	12
5	COML	316 SST HEX.HD.CAP SCREW 1/2-13 UNC-2B X 5 1/2" LG.	6
4	MC-421004	REMOVABLE BRACKET L.H.	1
3	MC-421003	REMOVABLE BRACKET R.H.	1
2	MD-397778	INNER FRAME WELDMENT	1
1	MD-397787	OUTER FRAME WELDMENT	1

PARTS LIST

UNLESS OTHERWISE SPECIFIED			ORIGINATOR	I.FANG	23-APR-2002
.XX	.XXX	ANGLES	DRAWN	G.SMITH	23-APR-2002
± ---	± ---	± ---	CHECKED	J.KILMER	06-JUN-2002
1. BREAK ALL SHARP EDGES .015 MAX. 2. DO NOT SCALE DRAWING. 3. DIMENSIONS BASED UPON ANSI Y14.5M-1982 4. ALL DIMENSIONS ARE INCHES 5. MAX. ALL MACH. SURFACES			APPROVED	J.KILMER	06-JUN-2002
			USED ON	ME-421016	
			MATERIAL	SEE PARTS LIST ABOVE	

FERMI NATIONAL ACCELERATOR LABORATORY
UNITED STATES DEPARTMENT OF ENERGY

PPD/MECHANICAL DEPARTMENT
E907 CHAMBER #2 SUPPORT STAND
INNER & OUTER FRAME ASSEMBLY

SCALE	DRAWING NUMBER	SHEET	REV
1:8 & NOTED	3907.500-MD-397786	1 OF 1	

CREATED WITH : Ideas8m4 GROUP: PPD/MECHANICAL DEPARTMENT