REV	DESCRIPTION	DRAWN	DATE
		APPROVED	DATE

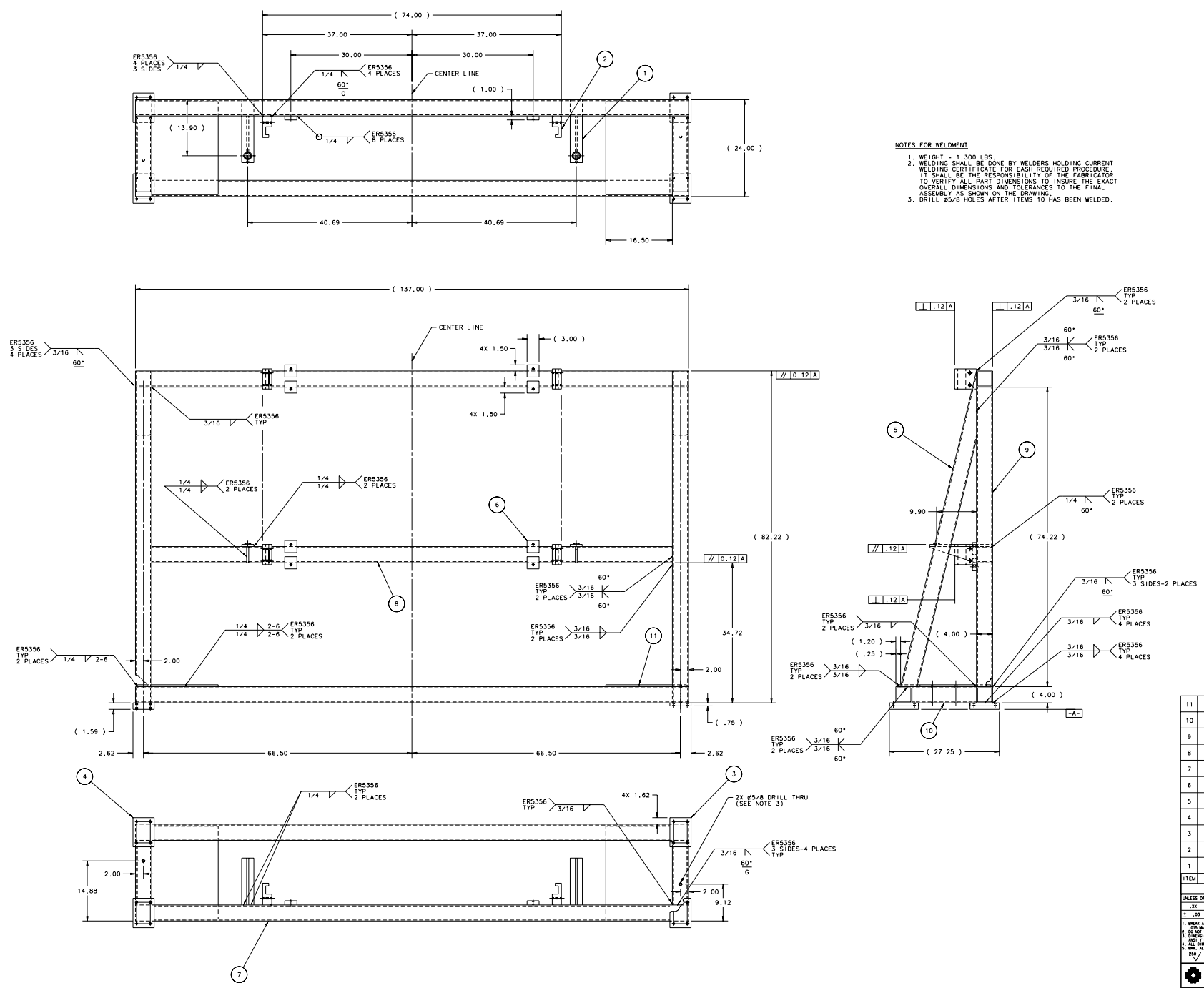

NOTES FOR WELDMENT

1. WEIGHT = 1,300 LBS.
2. WELDING SHALL BE DONE BY WELDERS HOLDING CURRENT WELDING CERTIFICATE FOR EASH REQUIRED PROCEDURE. IT SHALL BE THE RESPONSIBILITY OF THE FABRICATOR TO VERIFY ALL PART DIMENSIONS TO INSURE THE EXACT OVERALL DIMENSIONS AND TOLERANCES TO THE FINAL ASSEMBLY AS SHOWN ON THE DRAWING.
3. DRILL ø5/8 HOLES AFTER ITEMS 10 HAS BEEN WELDED.

ITEM	PART NO.	DESCRIPTION OR SIZE	QTY.
11	MB-421116	COUNTERWEIGHT MOUNTING PLATE	2
10	COML	ALUMINUM SQUARE TUBING-6063-T52 4 X 4 X .25 WALL X 16.00 LG.	2
9	COML	ALUMINUM SQUARE TUBING-6063-T52 4 X 4 X .25 WALL X 74.22 LG.	2
8	COML	ALUMINUM SQUARE TUBING-6063-T52 4 X 4 X .25 WALL X 129.00 LG.	1
7	COML	ALUMINUM SQUARE TUBING-6063-T52 4 X 4 X .25 WALL X 137.00 LG.	3
6	MB-421099	ANGLE MOUNTING PLATE	8
5	MC-421088	ANGLE TUBE	2
4	MB-421091	CASTER MOUNTING PLATE-THICK	2
3	MB-421092	CASTER MOUNTING PLATE-THIN	2
2	MB-421095	T SLIDE FRAME-RIGHT SIDE	4
1	MC-421094	FOOT ADJ. MOUNTING BRACKET	2

PARTS LIST

UNLESS OTHERWISE SPECIFIED			ORIGINATOR	I.FANG	31-OCT-2002
.XX	.XXX	ANGLES	DRAWN	G.SMITH	31-OCT-2002
± .03	± ---	± ---	CHECKED	W.CYKO	19-DEC-2002
			APPROVED	I.FANG	19-DEC-2002

1. BREAK ALL SHARP EDGES .250
2. DO NOT SCALE DRAWING.
3. DIMENSIONS BASED UPON ANSI Y14.5M-1982.
4. ALL DIMENSIONS ARE INCHES
5. MAX. ALL MACH. SURFACES

USED ON: ME-421104

MATERIAL: SEE PARTS LIST ABOVE

FERMI NATIONAL ACCELERATOR LABORATORY
UNITED STATES DEPARTMENT OF ENERGY

PPD/MECHANICAL DEPT.
E 907 DRIFT CHAMBER 3 SUPPORT FRAME WELDMENT

SCALE	DRAWING NUMBER	SHEET	REV
1 : 8	3907.512-ME-421087	1 OF 1	

CREATED WITH : Ideas8m4 GROUP: PPD/MECHANICAL DEPARTMENT