| REV | DESCRIPTION | DRAWN | DATE |
|---|---|---|---|
| | | APPROVED | DATE |

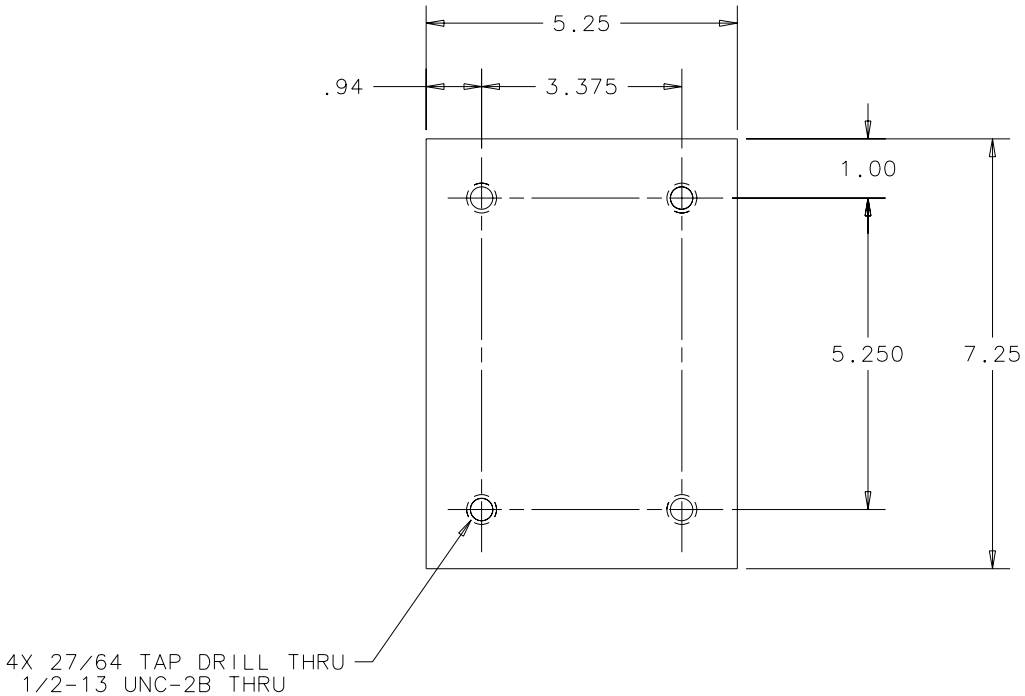


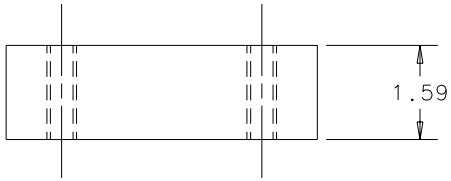


| ITEM | PART NO. | DESCRIPTION OR SIZE | QTY. |
|---|---|---|---|
| PARTS LIST | | | |

| UNLESS OTHERWISE SPECIFIED | | | ORIGINATOR | I.FANG | 01-NOV-2002 |
|---|---|---|---|---|---|
| .XX | .XXX | ANGLES | DRAWN | G.SMITH | 01-NOV-2002 |
| ± .03 | ± .015 | ± --- | CHECKED | W.CYKO | 19-DEC-2002 |
| | | | APPROVED | I.FANG | 19-DEC-2002 |

1. BREAK ALL SHARP EDGES .015 MAX.
2. DO NOT SCALE DRAWING.
3. DIMENSIONS BASED UPON ANSI Y14.5M-1982
4. ALL DIMENSIONS ARE INCHES
5. MAX. ALL MACH. SURFACES 125 √

USED ON: ME-421087

MATERIAL: ALUMINUM REC.-6061-T6511 1 3/4 X 5 1/2

**FERMI NATIONAL ACCELERATOR LABORATORY**
UNITED STATES DEPARTMENT OF ENERGY

PPD/MECHANICAL DEPT.
E 907 DRIFT CHAMBER 3 SUPPORT
CASTER MOUNT PLATE

| SCALE | DRAWING NUMBER | SHEET | REV |
|---|---|---|---|
| 1:2 | 3907.512-MB-421091 | 1 OF 1 | |

CREATED WITH : Ideas8m4 | GROUP: PPD/MECHANICAL DEPARTMENT