REV	DESCRIPTION	DRAWN	DATE
		APPROVED	DATE

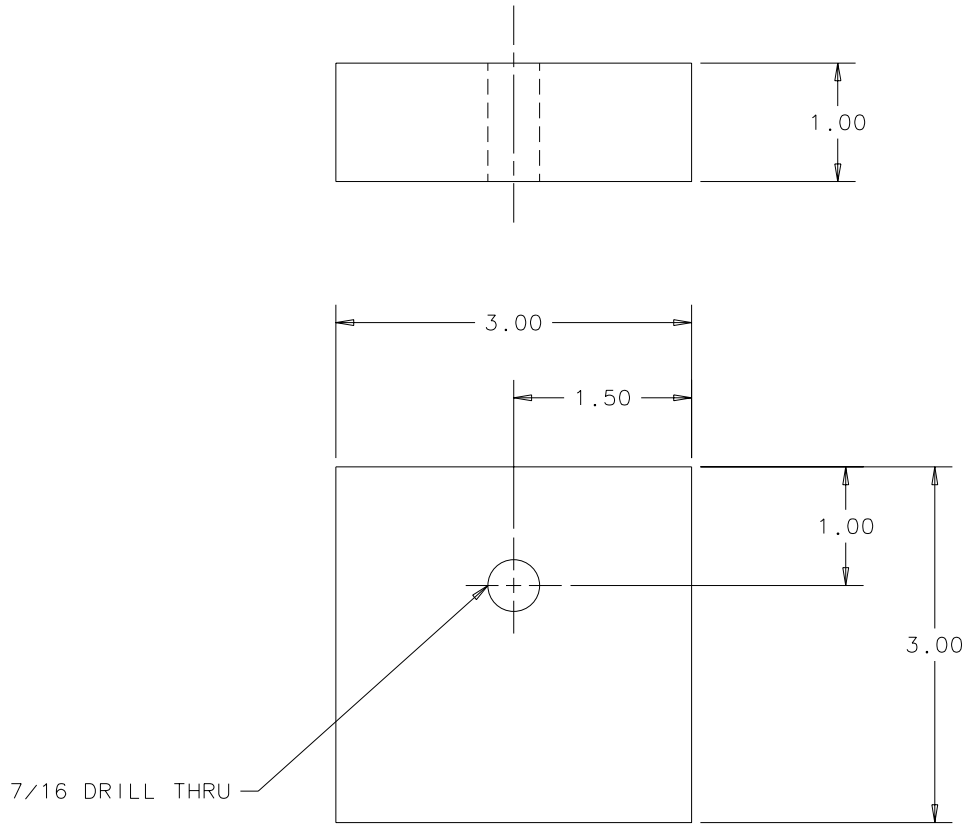

ITEM	PART NO.	DESCRIPTION OR SIZE	QTY.
PARTS LIST			

UNLESS OTHERWISE SPECIFIED			ORIGINATOR	I.FANG	05-NOV-2002
.XX	.XXX	ANGLES	DRAWN	G.SMITH	05-NOV-2002
± .03	± ---	± ---	CHECKED	W.CYKO	19-DEC-2002
			APPROVED	I.FANG	19-DEC-2002

1. BREAK ALL SHARP EDGES .015 MAX.
2. DO NOT SCALE DRAWING.
3. DIMENSIONS BASED UPON ANSI Y14.5M-1982
4. ALL DIMENSIONS ARE INCHES
5. MAX. ALL MACH. SURFACES 125 √

USED ON: ME-421087

MATERIAL: ALUMINUM REC.-6061-T6511 1/2 X 3 1/2

FERMI NATIONAL ACCELERATOR LABORATORY
UNITED STATES DEPARTMENT OF ENERGY

PPD/MECHANICAL DEPT.
E 907 DRIFT CHAMBER 3 SUPPORT
ANGLE MOUNTING PLATE

SCALE	DRAWING NUMBER	SHEET	REV
1:1	3907.512-MB-421099	1 OF 1	

CREATED WITH : Ideas8m4 | GROUP: PPD/MECHANICAL DEPARTMENT