REV	DESCRIPTION	DRAWN	DATE
		APPROVED	DATE

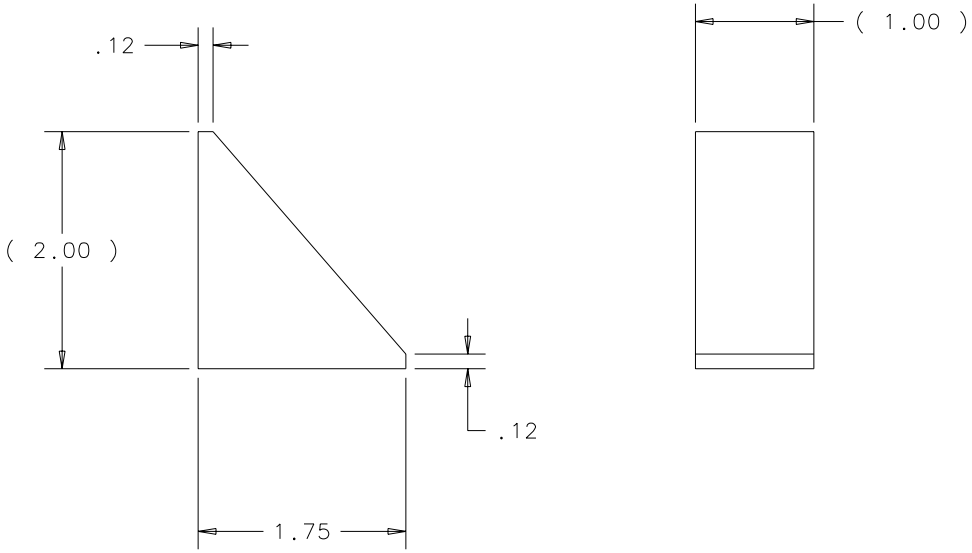

ITEM	PART NO.	DESCRIPTION OR SIZE	QTY.

PARTS LIST

UNLESS OTHERWISE SPECIFIED					
.XX	.XXX	ANGLES	ORIGINATOR	I.FANG	13-NOV-2002
± .03	± ---	± ---	DRAWN	G.SMITH	13-NOV-2002
			CHECKED	W.CYKO	19-DEC-2002
			APPROVED	I.FANG	19-DEC-2002

1. BREAK ALL SHARP EDGES .015 MAX.
2. DO NOT SCALE DRAWING.
3. DIMENSIONS BASED UPON ANSI Y14.5M-1982
4. ALL DIMENSIONS ARE INCHES
5. MAX. ALL MACH. SURFACES 125 √

USED ON: MB-421105

MATERIAL: ALUMINUM REC. - 6061-T6511 1 X 2

FERMI NATIONAL ACCELERATOR LABORATORY
UNITED STATES DEPARTMENT OF ENERGY

PPD/MECHANICAL DEPT.
E 907 DRIFT CHAMBER 4 SUPPORT
GUSSET-ANGLE MOUNTING BRACKET

SCALE	DRAWING NUMBER	SHEET	REV
1:1	3907.512-MB-421110	1 OF 1	

CREATED WITH : Ideas8m4 | GROUP: PPD/MECHANICAL DEPARTMENT