REV	DESCRIPTION	DRAWN	DATE
		APPROVED	DATE

NOTES

1. WEIGTHS: CHAMBER #4 - 500 LBS.
2. IN ORDER TO POSITION THE HOLE LOCATIONS FOR THE ANGLE BRACKETS ITEM 4 ON ROSIE MAGNET,FIRST ASSEMBLE ITEMS 2,3 AND 4 .NEXT LOCATE THIS ASSEMBLY USING DIMENSIONS SHOWN. MARK HOLE LOCATIONS ACCORDINGLY ON THE MAGNET. DRILL & TAP AS SHOWN IN DETAIL A.
3. TORQUE THE FOLLOWING ITEMS:
   FOR 1/4" BOLT - TORQUE TO 6 LBS/FT.
   FOR 3/8" BOLT - TORQUE TO 21 LBS/FT.
   FOR 1/2" BOLT - TORQUE TO 43 LBS/FT.
4. APPLY 3M SCOTCH WELD 2216 B/A GRAY EPOXY ADHESIVE ON ITEM 2 AFTER IT IS POSITIONED ON CHAMBER #4. CURING PROCEDURES SHALL COMPLY TO THE MANUFACTURERS RECOMMENDATIONS.AFTER EPOXY HAS CURED,INSTALL CHAMBER #4 TO ITS SUPPORT BRACKET AS SHOWN IN DETAIL C TORQUE ITEM 8 TO 21 LBS/FT.
5. THIS DIMENSION IS INITIAL SETTING THE CHAMBER #4 CAN TRAVEL VERTICALLY ±7/16" MAX. BEFORE MAKING THE FINAL ADJUSTMENT,RELEASE THE JAM NUT ON THE LEVELING FEET MOUNTS.AFTER COMPLETING THE FINAL ADJUSTMENT, TORQUE THE JAM NUT TO 21 LBS/FT
6. CHAMBER #3 & CHAMBER #4 CONNECTIONS ARE IDENTICAL THIS MEANS THAT CHAMBER #3 CAN BE INSTALLED ON THE SUPPORT BRACKET OF ROSIE.

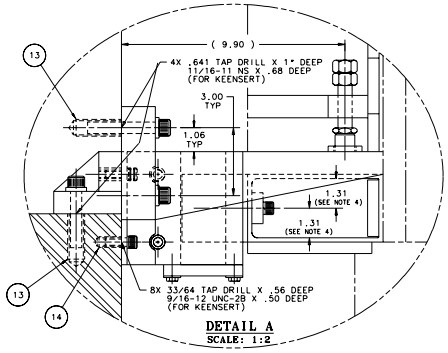

DETAIL A
SCALE: 1:2

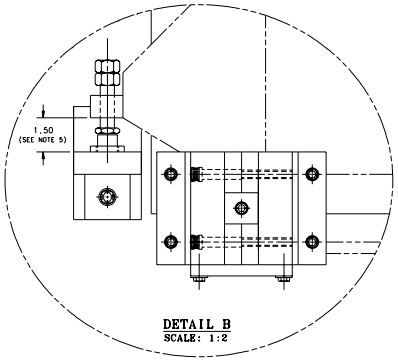

DETAIL B
SCALE: 1:2

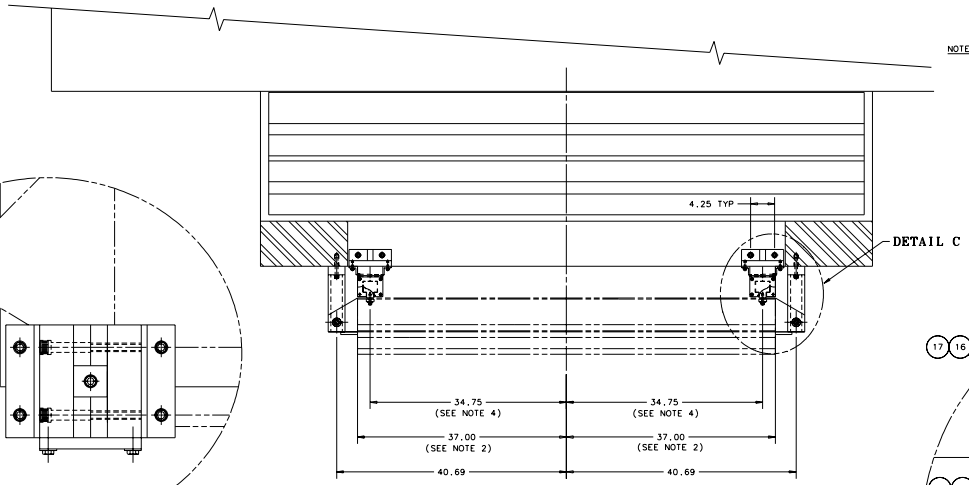

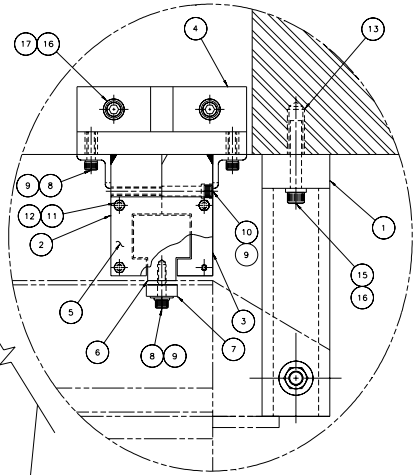

DETAIL C
SCALE: 1:2

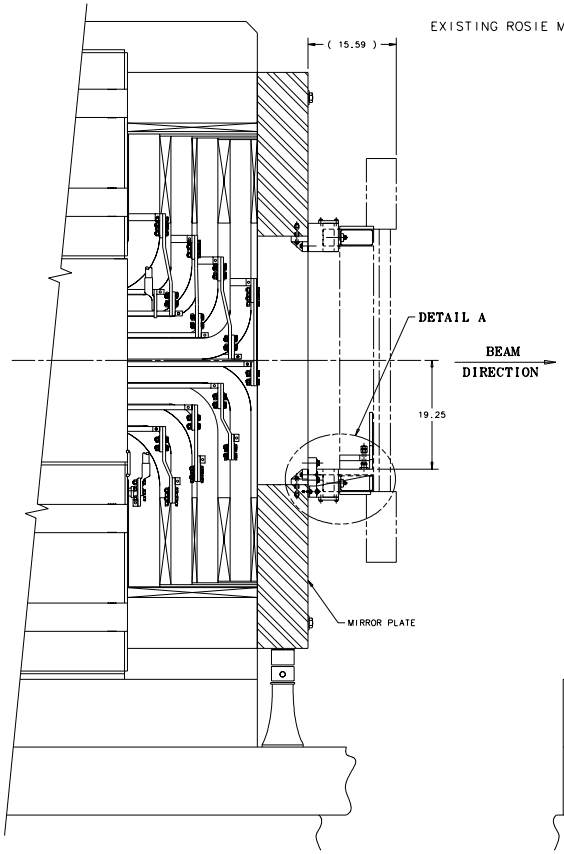

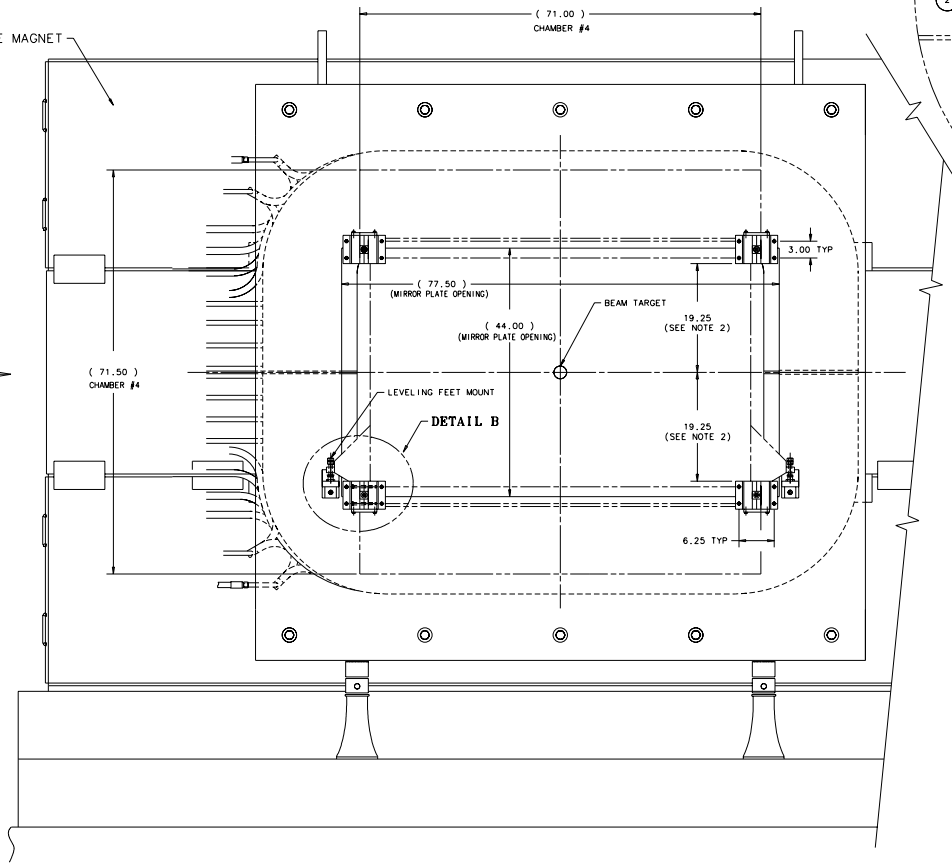

ITEM	PART NO.	DESCRIPTION OR SIZE	QTY.
17	COML	SOCKET HD. CAP SCREW 1/2-13 UNC-2A X 2" LG.-SS 300	8
16	COML	LOCK WASHER FOR SOCKET HD. CAP SCREW-1/2" SCREW SIZE-SS 300	12
15	COML	SOCKET HD. CAP SCREW 1/2-13 UNC-2A X 2 1/4" LG.-SS 300	4
14	COML	KEENSERT THREADED INSERT-KNHL 616 3/8-16 INTERNAL LOCKING THREAD 9/16-12 EXTERNAL THREAD-SS 300	8
13	COML	KEENSERT THREADED INSERT-KNHL 820 1/2-13 INTERNAL LOCKING THREAD 11/16-11 NS EXTERNAL THREAD-SS 300	12
12	COML	LOCK WASHER FOR SOCKET HD. CAP SCREW-1/4" SCREW SIZE-SS 300	16
11	COML	HEX. HD. SCREW 1/4-16 UNC-2A X 1" LG.-SS 300	16
10	COML	SOCKET HD. CAP SCREW 3/8-16 UNC-2A X 4" LG.-SS 300	8
9	COML	LOCK WASHER FOR SOCKET HD. CAP SCREW-3/8" SCREW SIZE-SS 300	28
8	COML	SOCKET HD. CAP SCREW 3/8-16 UNC-2A X 1 1/2" LG.-SS 300	20
7	MB-421119	ADAPTER PLATE	4
6	MB-421117	T SLIDE	4
5	MB-421096	BOTTOM STOP PLATE	4
4	MB-421105	ANGLE MOUNTING BRACKET	4
3	MC-421123	T SLIDE FRAME WELDMENT R.H.	4
2	MC-421122	T SLIDE FRAME WELDMENT L.H.	4
1	MC-421107	FOOT ADJ. MOUNTING BRACKET	2

PARTS LIST

UNLESS OTHERWISE SPECIFIED			ORIGINATOR	I.FANG	15-NOV-2002
.XX	.XXX	ANGLES	DRAWN	G.SMITH	15-NOV-2002
± .03	± ---	± ---	CHECKED	W.CYKO	19-DEC-2002
			APPROVED	I.FANG	19-DEC-2002

1. BREAK ALL SHARP EDGES
2. DO NOT SCALE DRAWING.
3. DIMENSIONS BASED UPON ANSI Y14.5M-1982
4. ALL DIMENSIONS ARE INCHES
5. MAX. ALL MACH. SURFACES 125

USED ON: 9200.001-ME-387568

MATERIAL: SEE PARTS LIST ABOVE

FERMI NATIONAL ACCELERATOR LABORATORY
UNITED STATES DEPARTMENT OF ENERGY

PPD/MECHANICAL DEPT.
E 907 DRIFT CHAMBER 4 & IT'S SUPPORT BRACKET ON ROSIE MAGNET

SCALE	DRAWING NUMBER	SHEET	REV
1 : 8	3907.512-ME-421111	1 OF 1	

CREATED WITH : Ideas8m4 GROUP: PPD/MECHANICAL DEPARTMENT