REV	DESCRIPTION	DRAWN	DATE
		APPROVED	DATE

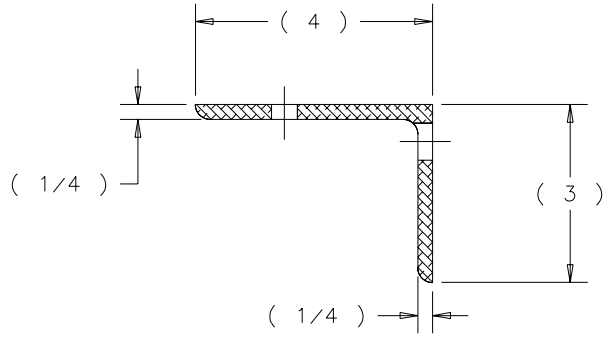

SECTION A-A

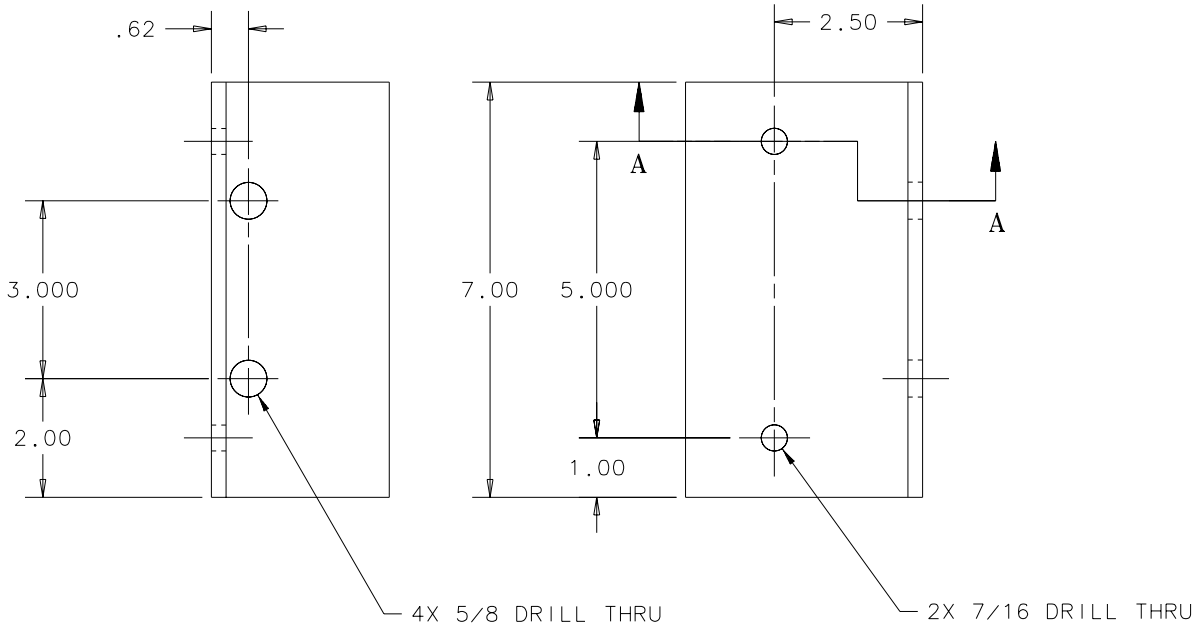

ITEM	PART NO.	DESCRIPTION OR SIZE	QTY.

PARTS LIST

UNLESS OTHERWISE SPECIFIED			ORIGINATOR	I.FANG	04-DEC-2002
.XX	.XXX	ANGLES	DRAWN	G.SMITH	04-DEC-2002
± .03	± .015	± ---	CHECKED	W.CYKO	19-DEC-2002
			APPROVED	I.FANG	19-DEC-2002

1. BREAK ALL SHARP EDGES .015 MAX.
2. DO NOT SCALE DRAWING.
3. DIMENSIONS BASED UPON ANSI Y14.5M-1982
4. ALL DIMENSIONS ARE INCHES
5. MAX. ALL MACH. SURFACES 125

USED ON: MC-421120

MATERIAL: ALUMINUM ANGLE-6061-T6 4 X 3 X 1/4

FERMI NATIONAL ACCELERATOR LABORATORY
UNITED STATES DEPARTMENT OF ENERGY

PPD/MECHANICAL DEPT.
E 907 DRIFT CHAMBER 3 SUPPORT ANGLE

SCALE	DRAWING NUMBER	SHEET	REV
1:2	3907.512-MB-421118	1 OF 1	

CREATED WITH : Ideas8m4 | GROUP: PPD/MECHANICAL DEPARTMENT