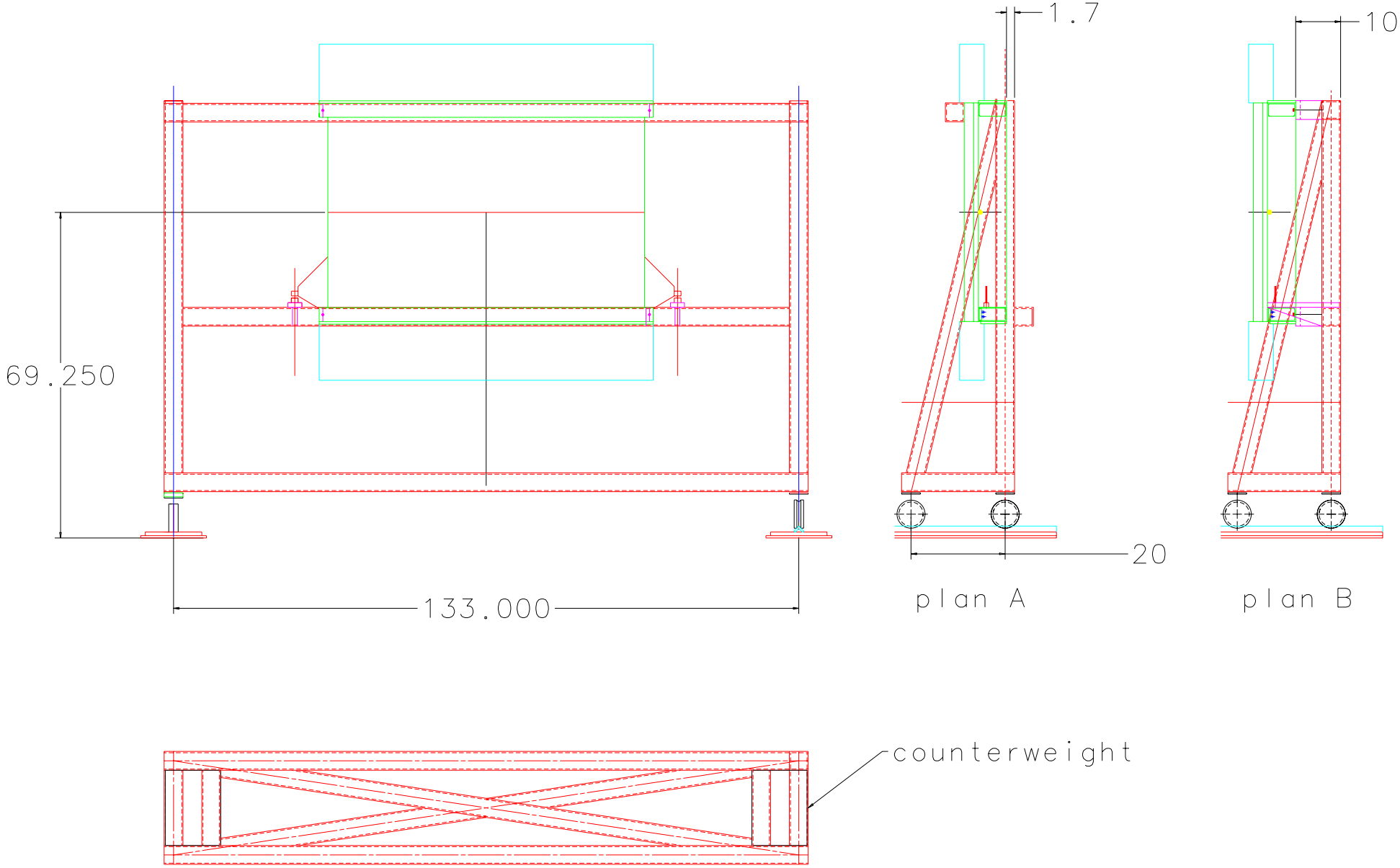

Plotted by ingridf on 10-Sep-02 , File: chamber3.pff