B-39436

REVISIONS				
LET	DESCRIPTION	DATE	DR	CHK

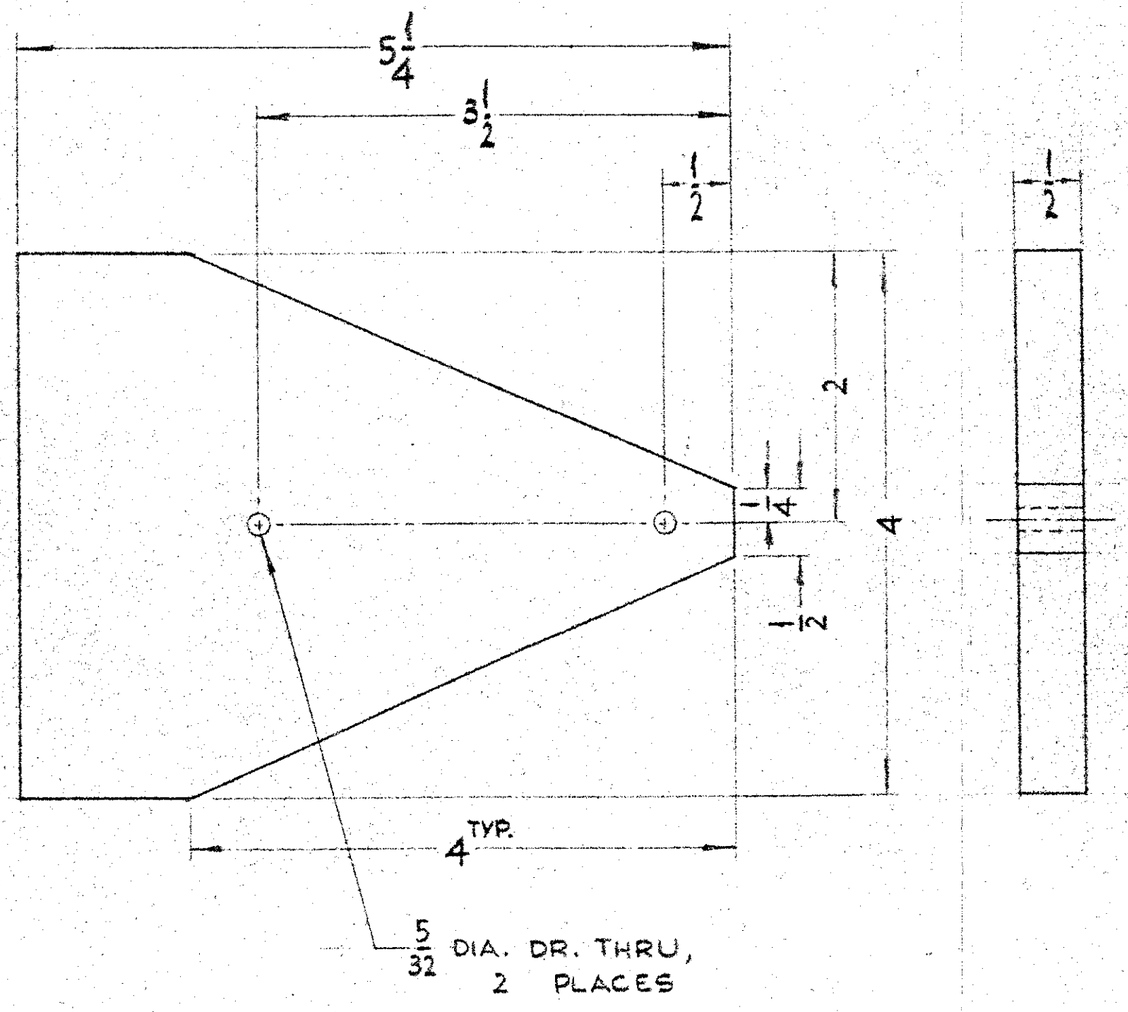

NOTE

SAW CUT ALL AROUND

ITEM	DESCRIPTION OR MATERIAL	DWG. NO.	QT'Y
3	ALUM. 6061-T6		14

NEVIS LABORATORIES
COLUMBIA UNIVERSITY
IRVINGTON, NEW YORK 10533

BEARING PLATE
TRANSFER FRAME

DRAWN F.D.M.	CHECKED	APPROVED
DATE SEPT. 25, 1981	SCALE FULL	NEXT ASS'Y D-39440

FRACTIONS ± 1/64
DECIMALS ± .005
ANGLES ± 1/2°
UNLESS OTHERWISE GIVEN

B-39436

REV.

X-706A