REVISIONS				
LET	DESCRIPTION	DATE	BY	CKD
A	ADDED (3) 1¼ DIA, (1) 2 DIA HOLES	11-11-81	AT	AT

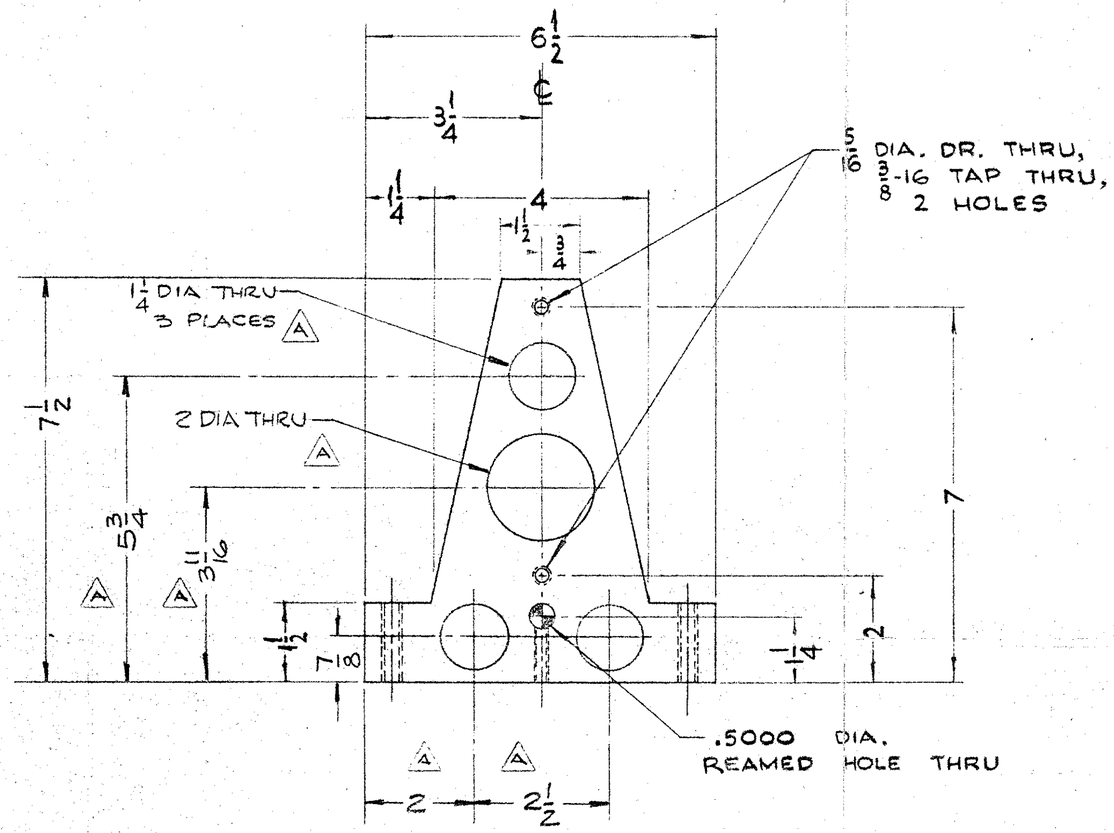

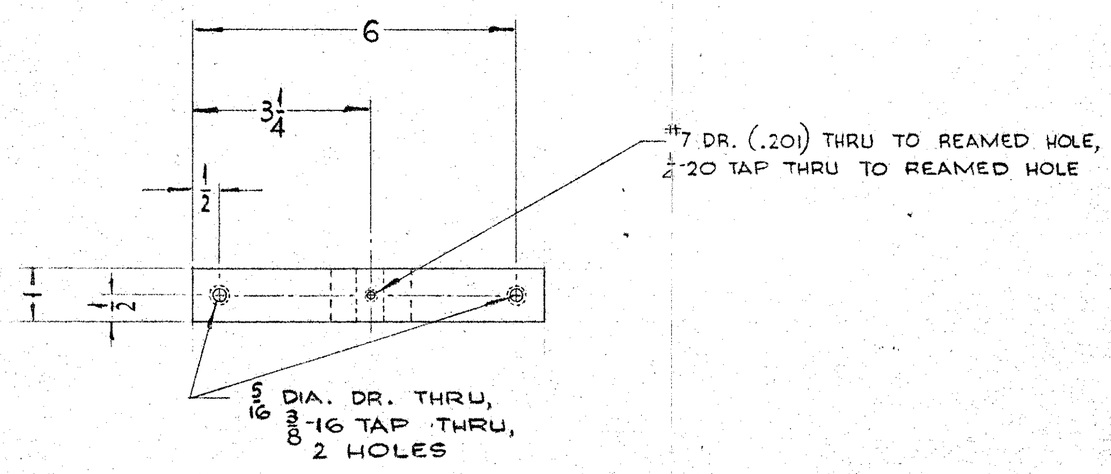

NOTE

SAW CUT ALL AROUND

ITEM	DESCRIPTION OR MATERIAL	DWG. NO.	QT'Y
2	ALUM. JIG PLATE		12

NEVIS LABORATORIES
COLUMBIA UNIVERSITY
IRVINGTON, NEW YORK 10533

PIN BLOCK
TRANSFER FRAME

DRAWN F.D.M. CHECKED APPROVED

DATE Sept. 25, 1981 SCALE 1/2 NEXT ASS'Y D-39440

FRACTIONS ± 1/64
DECIMALS ± .005
ANGLES ± 1/2°
UNLESS OTHERWISE GIVEN

C-39435 REV. A

X-706A