C-39438

REVISIONS				
LET	DESCRIPTION	DATE	BY	CKD

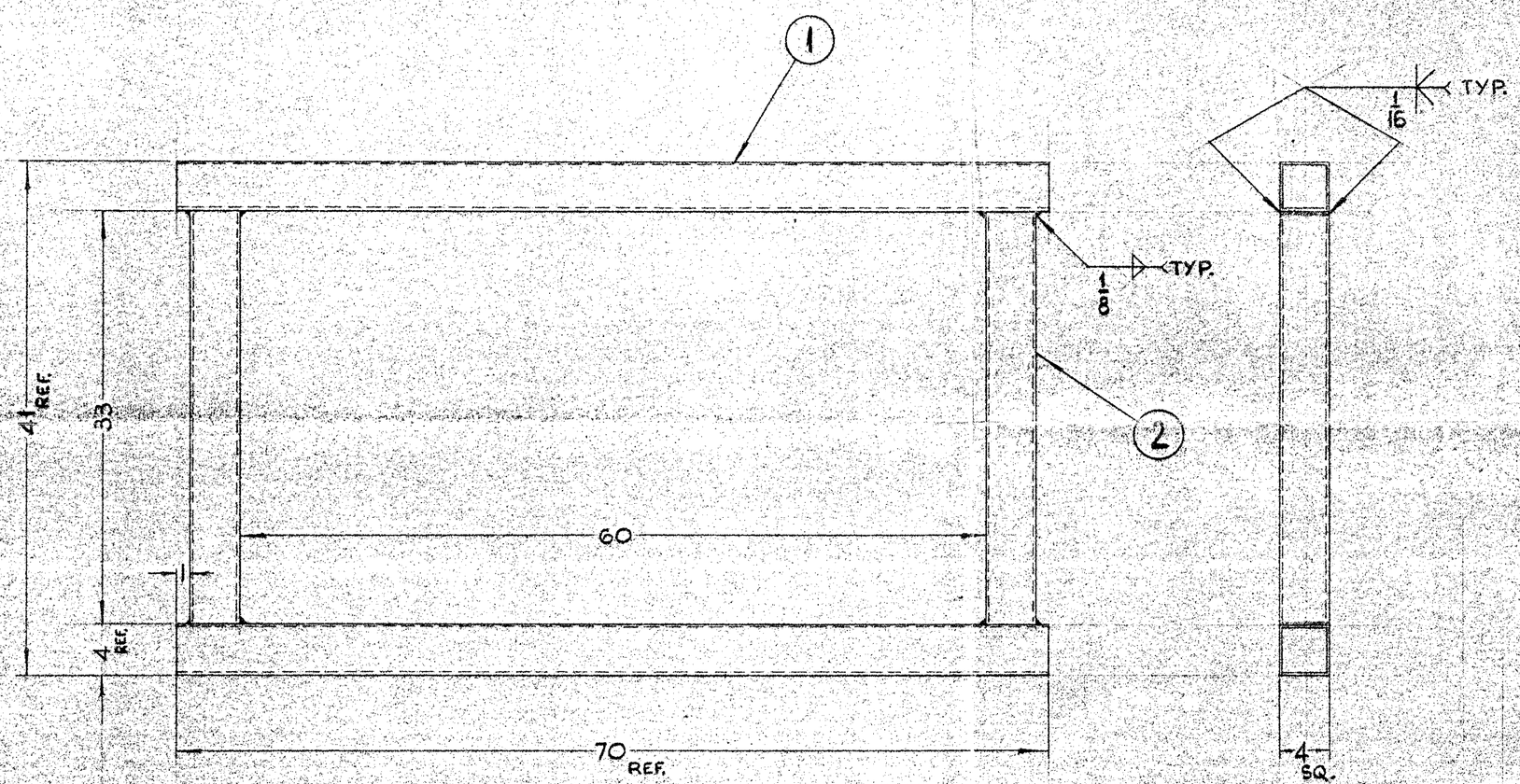

ITEM	DESCRIPTION OR MATERIAL	DWG. NO.	QT'Y
2	SHORT MEMBER	B-39439	2
1	4" SQ. × 1/8" WALL × 70" LG. ALUM. TUBING		2
	THIS DWG. ITEM #1 ON NEXT ASS'Y.		

NEVIS LABORATORIES
COLUMBIA UNIVERSITY
IRVINGTON, NEW YORK 10533

BASE FRAME WELDMENT
TRANSFER FRAME ASSEMBLY

DRAWN F.D.M. | CHECKED | APPROVED

DATE Sept. 28, 1981 | SCALE 1/8 | NEXT ASS'Y D-39440

FRACTIONS ± 1/64
DECIMALS ± .005
ANGLES ± 1/2°
UNLESS OTHERWISE GIVEN

C-39438

REV.

X-706A