Note : The photos may not necessarily correspond to the latest modifications.

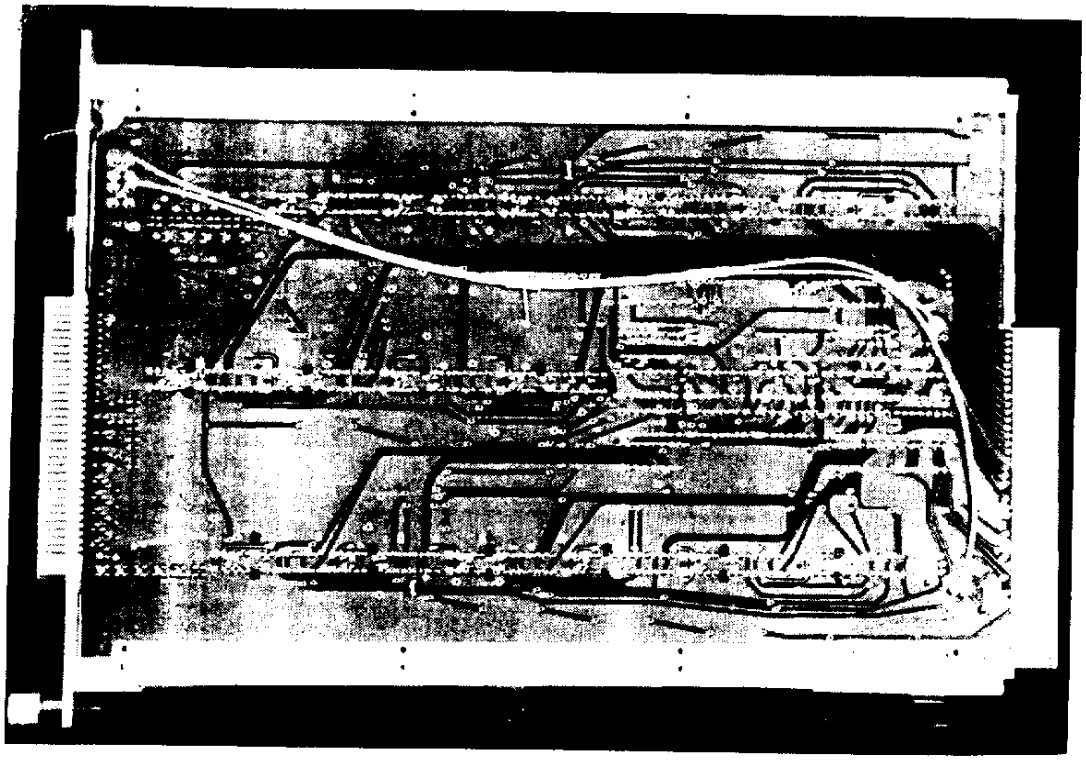

PIO 348-2-76

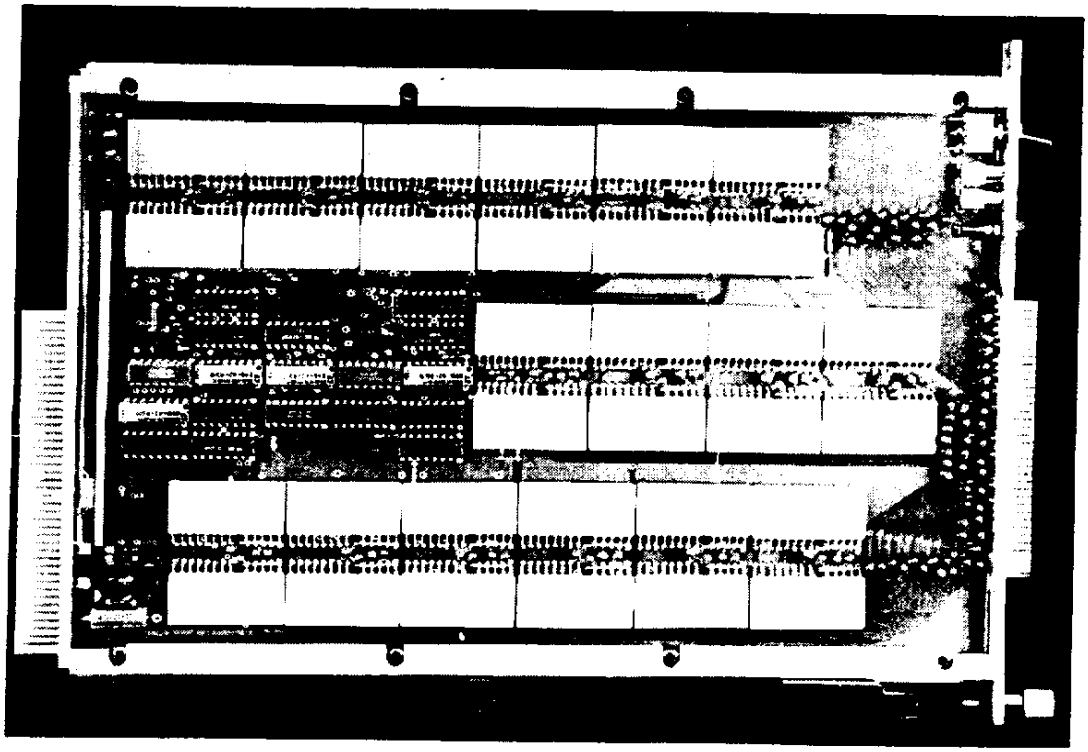

PIO 352-2-76

PIO 345-2-76

R.M.H.- 32 CHANNELS TYPE 4236

CERN-EP
4236-1A3
76-03-11 FP

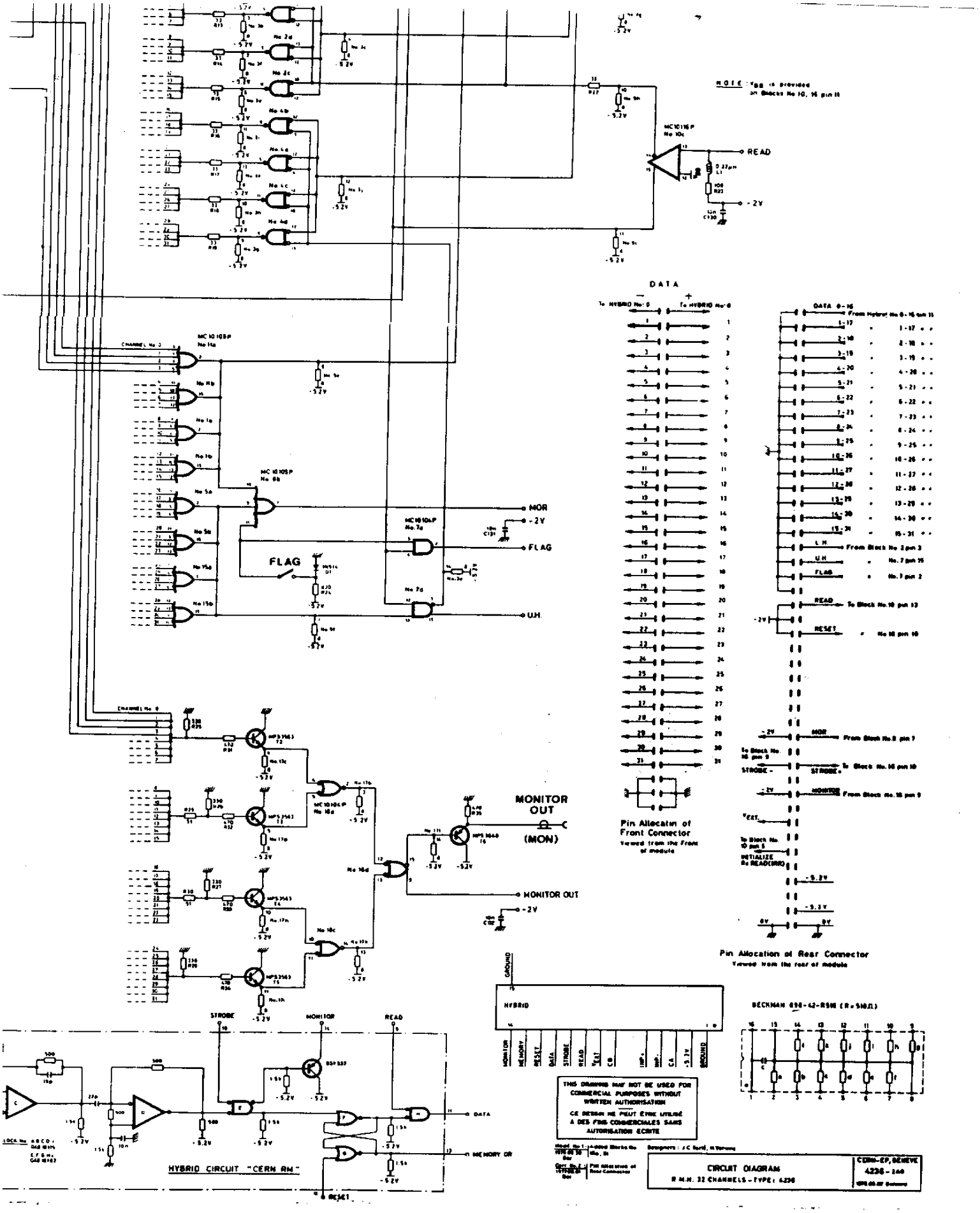

NOTE: V_{BB} is provided on Blocks No 10, 16 pin 11
READ
-2V
DATA
To HYBRID No: 0
To HYBRID No: 0
DATA 0-16
From Hybrid No 0-16 pin 11
MOR
FLAG
U.H.
CHANNEL No 0
MONITOR OUT
(MON)
MONITOR OUT
Pin Allocation of Front Connector
Viewed from the Front of module
Pin Allocation of Rear Connector
Viewed from the rear of module
STROBE
MONITOR
READ
DATA
MEMORY OR
RESET
HYBRID CIRCUIT "CERN RM"
GROUND
HYBRID
MONITOR
MEMORY
RESET
DATA
STROBE
READ
CB
CA
-5.2V
BECKMAN 698-42-R510 (R=510Ω)
THIS DRAWING MAY NOT BE USED FOR COMMERCIAL PURPOSES WITHOUT WRITTEN AUTHORISATION
CE DESSIN NE PEUT ÊTRE UTILISÉ A DES FINS COMMERCIALES SANS AUTORISATION ECRITE
Designers: J.C. Tarté, H. Verwey
CIRCUIT DIAGRAM
R.M.H. 32 CHANNELS - TYPE: 4236
CERN-EP, GENEVE
4236-140

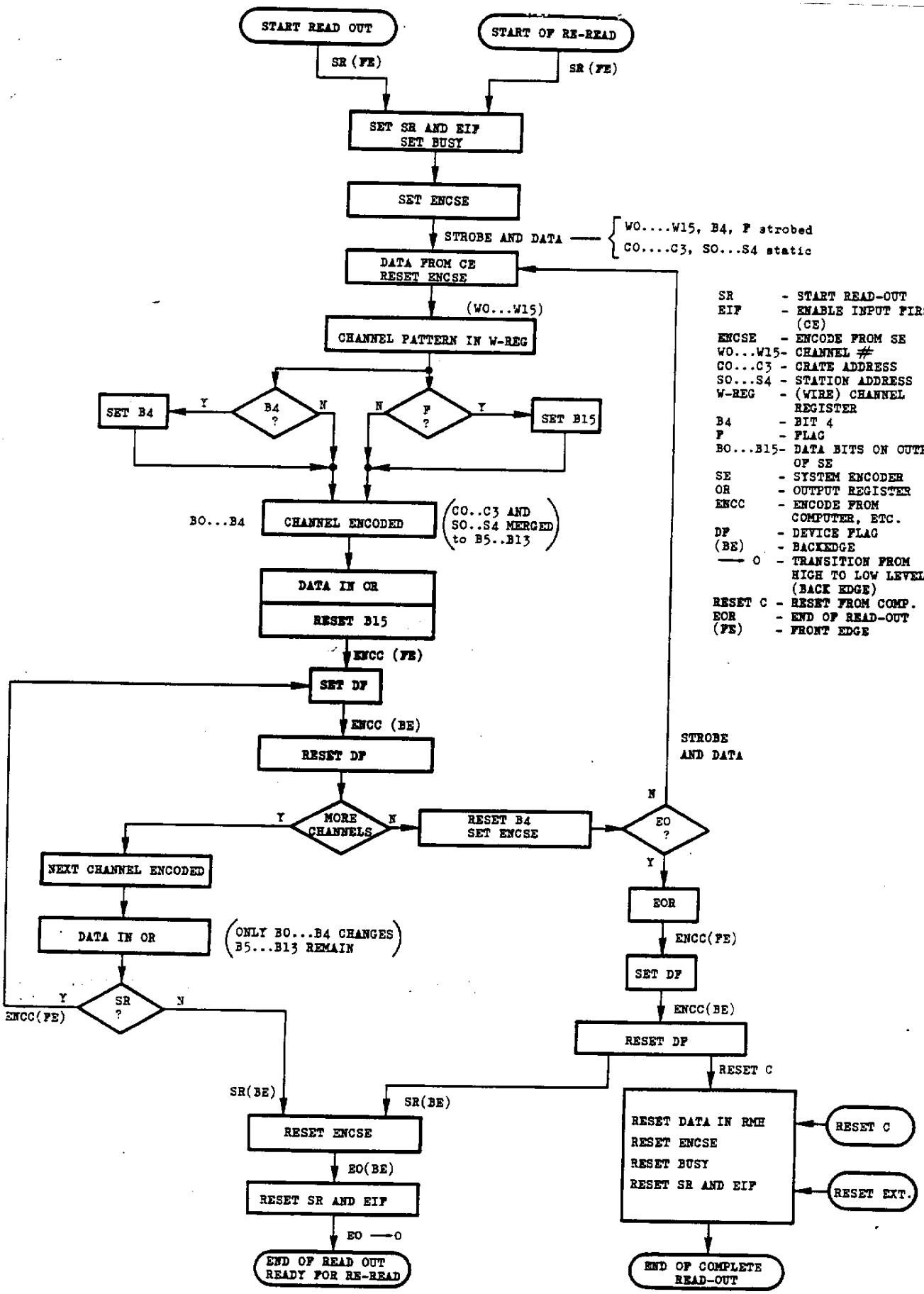

F L O W C H A R T

SYSTEM ENCODER - TYPE 158 CERN-EP

Component side		Solder side
Free	- 1 -	Free
"	- 2 -	"
"	- 3 -	"
"	- 4 -	"
"	- 5 -	"
		No contacts (connector cut-out)
Free	- 35 -	Free
"	- 36 -	"
"	- 37 -	"
"	- 38 -	-6 V
"	- 39 -	Free
-5.2 V	- 40 -	"
Free	- 41 -	"
-5.2 V	- 42 -	"
GND	- 43 -	GND

Fig. 9
Datawny Connections (CAMAC Connector)
viewed from front panel

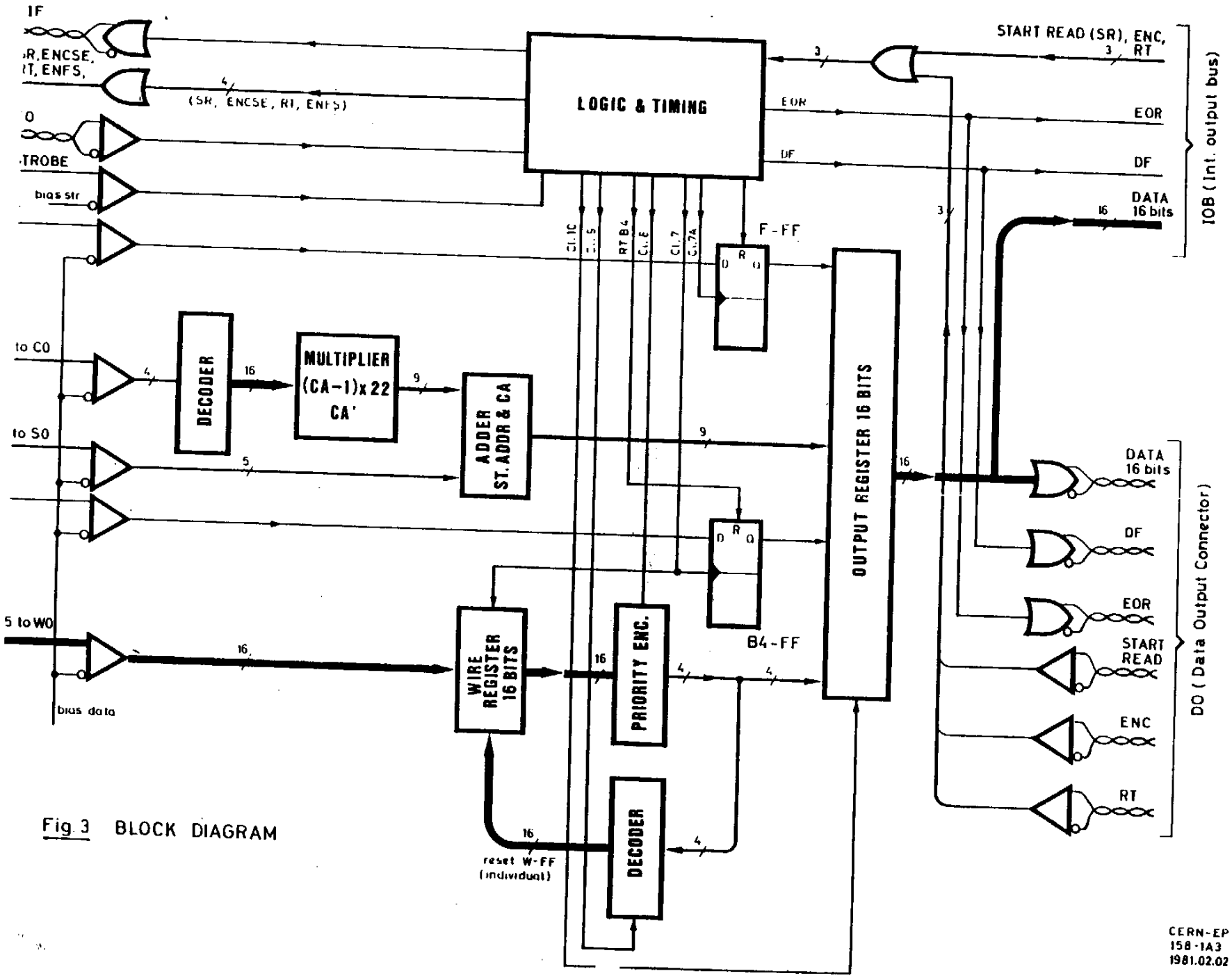

Fig 3 BLOCK DIAGRAM

CERN-EP
158-1A3
1981.02.02 Borcard

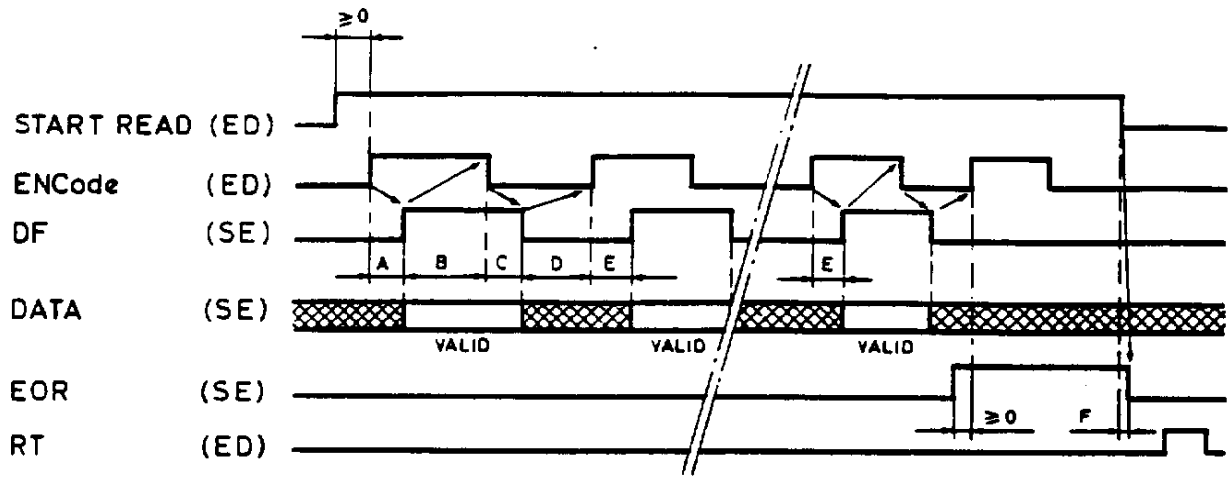

(ED) : External Device
(SE) : System Encoder

TIMES (typical) :

A ~ 180 ns
B dependant of ED (+ int. 20 ns)
C ~ 30 ns
D dependant of ED (+ int. 20 ns)
E ~ 120 ns
F ~ 30 ns

Times with ~ 2 meters of cable to ED, add ~ 20 ns per additional meter of cable to times A, C and E.

Fig. 4 Double hand-shake and typical times.